BROOKPOINT

MIXED–USE DEVELOPMENT
WEYMOUTH, MASSACHUSETTS

DRAWING INDEX

SHEET NO.	TITLE
C–1	COVER SHEET
C–2	CONSTRUCTION NOTES AND ZONING ANALYSIS
C–3	SITE LAYOUT
C–4	SITE GRADING
C–5	SITE UTILITIES
C–6	SITE LANDSCAPING
C–7	EROSION CONTROL
C–8	SITE DETAILS
C–9	SITE DETAILS
C–10	SITE DETAILS
C–11	SITE DETAILS
S–1	EXISTING CONDITIONS SURVEY BY NEPONSET VALLEY SURVEY ASSOC.
S–2	EXISTING CONDITIONS SURVEY BY NEPONSET VALLEY SURVEY ASSOC.

PERMIT PLANS

OVERVIEW MAP

SCALE: 1"= 125'±

APPLICANT:	GND REALTY TRUST
DEVELOPER:	ADAMS BUILDERS
ARCHITECT:	SHESKEY ARCHITECTES
ENGINEER:	SITEC ENVIRONMENTAL, INC.
LAND SURVEYOR:	NEPONSET VALLEY SURVEY ASSOCIATES, INC.

COMMONWEALTH OF MASSACHUSETTS
JEFFREY A. COUTURE
CIVIL
No. 47084
REGISTERED PROFESSIONAL ENGINEER

No.	Date	Chkd.	Aprvd.

scale: AS NOTED
date: JAN. 25, 2017
drawn: JDO
checked: JAC
approved: JAC
drawing number: C–1

project: "BROOKPOINT" MIXED–USE DEVELOPMENT
4 – 48 COMMERCIAL STREET
WEYMOUTH, MASSACHUSETTS

client: GND REALTY TRUST
61 SOLOMON PIERCE ROAD
LEXINGTON MA 02420

drawing title: COVER

SITEC ENVIRONMENTAL
Civil and Environmental Engineering
Land Use Planning and Surveying
Hazardous and Solid Waste Consultants
WWW.SITEC-ENGINEERING2.COM

789 Plain Street, Unit C
Marshfield, MA 02050
PHONE (781) 319-2100
FAX (781) 834-4783

File No. SE14–1036

CONSTRUCTION NOTES

1. PROPERTY LINE, TOPOGRAPHIC, AND UTILITY INFORMATION FROM A PLAN ENTITLED "SITE PLAN FOR 8 COMMERCIAL STREET IN WEYMOUTH/BRAINTREE, MASS., PREPARED BY NEPONSET VALLEY SURVEY ASSOC., INC QUINCY MA", DATED FEBRUARY 19, 2014, REVISED DECEMBER 30, 2016. INVERT ON SEWER MANHOLE AND SEWER LINE WHERE CONNECTION PROPOSED FROM A PLAN ENTITLED "ALTA/ACSM LAND TITLE SURVEY" PREPARED BY CONTROL POINT ASSOCIATES, INC. DATED JUNE 25, 2005.
2. REFERENCE: WEYMOUTH ASSESSORS MAP 20, BLOCK 202, LOTS 20–13, –17, –18, –19, –20, –21 AND BRAINTREE ASSESSOR PARCEL IDS 3006–0–19 AND 3006–0–20.
3. ALL CONSTRUCTION SHALL BE IN ACCORDANCE WITH ALL APPLICABLE STATE AND LOCAL STANDARDS AND REGULATIONS.
4. PRIOR TO CONSTRUCTION, THE CONTRACTOR SHALL SECURE ALL NECESSARY STATE, MUNICIPAL AND UTILITY PERMITS AND VERIFY THE PROPOSED LOCATION OF UTILITIES WITH UTILITY COMPANIES. ALL UTILITIES TO BE INSTALLED PER THE RESPECTIVE REQUIREMENTS OF EACH PROVIDER.
5. WHERE PROPOSED PAVEMENT AND WALKS ARE TO MEET EXISTING, THE CONTRACTOR SHALL SAW CUT TO A NEAT LINE AND MATCH GRADE.
6. CURBING TO BE 6 INCH HIGH REINFORCED CONCRETE CURB UNLESS OTHERWISE SPECIFIED.
7. ALL EXISTING TREES, SHRUBS AND GROUND COVER WHERE NATURAL GRADE IS TO BE RETAINED SHALL BE KEPT IN THEIR EXISTING STATE UNLESS REMOVAL IS REQUIRED FOR CONSTRUCTION PURPOSES.
8. ALL AREAS DISTURBED BY CONSTRUCTION AND NOT TO BE PAVED OR OTHERWISE TREATED AS NOTED ON PLAN SHALL BE TREATED WITH 4" OF LOAM, SEEDED AND HAY MULCHED FOR EROSION CONTROL.
9. CONTRACTOR IS RESPONSIBLE FOR VERIFICATION OF EXISTING TOPOGRAPHIC AND UTILITY INFORMATION PRIOR TO CONSTRUCTION. CONTRACTOR TO ENSURE MINIMUM SLOPES (0.75% AGAINST ALL WALKS, CURBS, AND GUTTERS; 1% ON PAVED SURFACES, 5% ON LANDSCAPING) TO PREVENT PONDING. ANY DISCREPANCIES SHALL BE REPORTED TO THE ENGINEER IMMEDIATELY IN WRITING.
10. AN EROSION AND SEDIMENTATION CONTROL MEASURES PLAN SHALL BE PROVIDED IN ACCORDANCE WITH THE MASSACHUSETTS EROSION AND SEDIMENT CONTROL GUIDELINES FOR URBAN AND SUBURBAN AREAS DATED MARCH 1997.
11. EROSION AND SEDIMENTATION CONTROL MEASURES SHALL BE IN PLACE PRIOR TO THE COMMENCEMENT OF ANY SITE WORK OR EARTHWORK OPERATIONS, SHALL BE MAINTAINED DURING CONSTRUCTION, AND SHALL REMAIN IN PLACE UNTIL ALL SITE WORK IS COMPLETE AND GROUND COVER IS ESTABLISHED.
12. REINFORCED CONCRETE PIPE SHALL BE MANUFACTURED IN ACCORDANCE WITH ASTM SPECIFICATION C76 AND AASHTO DESIGNATION M170, WALL B. REINFORCED CONCRETE MANHOLES & CATCH BASINS SHALL BE MANUFACTURED IN ACCORDANCE WITH ASTM SPECIFICATION C478 AND AASHTO DESIGNATION M199. ALL CONCRETE PIPES AND STRUCTURES SHALL MEET THE LATEST MASS DOT SPECIFICATIONS AND MUNICIPAL SUBDIVISION STANDARDS.
13. CORRUGATED POLYETHYLENE PIPE AND STRUCTURES SHALL CONFORM WITH AASHTO DESIGNATIONS M294 AND M252, SHALL BE MANUFACTURED WITH HIGH DENSITY POLYETHYLENE PLASTIC AND SHALL BE ADS N–12 PIPE AS MANUFACTURED BY ADVANCE DRAINAGE SYSTEM, INC. OR HANCOR HI Q PIPE AS MANUFACTURED BY HANCOR, INC. OR APPROVED EQUAL UNLESS OTHERWISE NOTED OR DETAILED.
14. ALL CAST IRON PIPING SHALL MEET THE REQUIREMENTS OF THE MASS. PLUMBING CODE AND THE WEYMOUTH PLUMBING INSPECTOR.
15. THE CONTRACTOR IS SPECIFICALLY CAUTIONED THAT THE LOCATION AND/OR ELEVATION OF EXISTING UTILITIES AND STRUCTURES AS SHOWN ON THESE PLANS IS BASED THE SURVEY PLAN REFERENCED IN NOTE #1. THIS PLAN WAS BASED ON RECORDS OF VARIOUS UTILITY COMPANIES AND WHERE POSSIBLE, MEASUREMENTS TAKEN IN THE FIELD. THIS INFORMATION IS NOT TO BE RELIED ON AS BEING EXACT OR COMPLETE. UTILITIES MAY BE PRESENT THAT ARE NOT SHOWN ON THE PLAN AND THE LOCATION OF ALL UNDERGROUND UTILITIES AND STRUCTURES SHALL BE VERIFIED IN THE FIELD BY THE CONTRACTOR PRIOR TO THE START OF CONSTRUCTION. THE CONTRACTOR MUST CONTACT THE APPROPRIATE UTILITY COMPANY, THE WEYMOUTH DEPARTMENT OF PUBLIC WORKS, AND "DIG SAFE" AT LEAST 72 HOURS PRIOR TO ANY EXCAVATION WORK TO REQUEST EXACT FIELD LOCATION OF UTILITIES AND THE ENGINEER SHALL BE NOTIFIED IN WRITING OF ANY UTILITIES INTERFERING WITH THE PROPOSED CONSTRUCTION AND APPROPRIATE REMEDIAL ACTION TAKEN BEFORE PROCEEDING WITH THE WORK. IT SHALL BE THE RESPONSIBILITY OF THE CONTRACTOR TO RELOCATE ALL EXISTING UTILITIES WHICH CONFLICT WITH THE PROPOSED IMPROVEMENTS SHOWN ON THE PLAN.
16. THE CONTRACTOR SHALL BE RESPONSIBLE FOR ESTABLISHING AND MAINTAINING ALL CONTROL POINTS AND BENCHMARKS NECESSARY FOR THE WORK.
17. DOMESTIC WATER SERVICES SHALL BE INSTALLED WITH APPROPRIATELY SIZED GATE, BOX, AND TEE FITTINGS AND BE OF THE SIZE & MATERIAL SPECIFIED BY THE WEYMOUTH DPW. WATER METER(S) SHALL BE AS REQUIRED BY THE DPW.
18. TEST PITS AND/OR BORINGS WERE TAKEN FOR THE PURPOSE OF DESIGN AND SHOW CONDITIONS AT BORING POINTS ONLY. THEY DO NOT NECESSARILY SHOW THE NATURE OF ALL MATERIALS TO BE ENCOUNTERED DURING CONSTRUCTION.
19. THE CONTRACTOR IS RESPONSIBLE FOR OBTAINING AND PAYING FOR ANY PERMITS AND/OR UTILITY CONNECTION FEES REQUIRED TO CARRY OUT THE WORK OUTLINED, INCLUDING BUT NOT LIMITED TO DEMOLITION.
20. DISPOSAL OF ALL DEMOLISHED MATERIALS IS THE RESPONSIBILITY OF THE CONTRACTOR AND MUST BE OFF–SITE IN ACCORDANCE WITH ALL FEDERAL, STATE AND LOCAL MUNICIPAL REQUIREMENTS.
21. THE CONTRACTOR SHALL PROTECT AND/OR CAP OFF ALL EXISTING ON–SITE UTILITY SERVICES DESIGNATED ON THESE DRAWINGS. SERVICES SHALL BE CAPPED OFF WHERE SAME ENTER THE PERIMETER OF THE PROPERTY LINE.
22. THE LIMIT OF WORK LINE FOR THE AREA TO BE CLEARED AND GRUBBED SHALL BE THE SAME AS THE LIMIT OF WORK LINE NECESSARY FOR GRADING PURPOSES, (I.E., THE GRADING LIMITS AROUND THE PERIMETER OF THE PROJECT AREA).
23. ALL GRAVITY SEWER PIPE SHALL BE POLYVINYL CHLORIDE PIPE (P.V.C.) S.D.R. 35 AND SHALL CONFORM WITH ASTM–D3034 UNLESS NOTED OTHERWISE.
24. ALL DUCTILE IRON SEWER PIPING SHALL CONFORM TO ASTM–A746 AND MEET THE REQUIREMENTS OF THE WEYMOUTH DPW SEWER DIVISION.
25. A MINIMUM OF 18" VERTICAL CLEARANCE SHALL BE MAINTAINED WHERE WATER LINES CROSS STORM DRAIN LINES.
26. WHERE SANITARY SEWERS CROSS WATER LINES, THE SEWER SHALL BE LAID AT SUCH AN ELEVATION THAT THE CROWN OF THE SEWER IS AT LEAST EIGHTEEN INCHES BELOW THE INVERT OF THE WATER MAIN. IF THE ELEVATION OF THE SEWER CANNOT BE VARIED TO MEET THIS REQUIREMENT, THE WATER MAIN SHALL BE RELOCATED TO PROVIDE THIS SEPARATION OR CONSTRUCTED WITH MECHANICAL JOINT PIPE FOR A DISTANCE OF TEN FEET ON EACH SIDE OF THE SEWER. ONE FULL LENGTH OF WATER MAIN SHALL BE CENTERED OVER THE SEWER SO THAT BOTH JOINTS WILL BE AS FAR FROM THE SEWER AS POSSIBLE. IF MECHANICAL JOINT PIPE IS NOT USED THEN BOTH THE WATER MAIN AND SANITARY SEWER SHALL BE ENCASED IN CONCRETE FOR A MINIMUM DISTANCE OF 10 FEET FROM THE CROSSING POINT OF THE OTHER PIPE AS MEASURED NORMALLY FROM ALL POINTS ALONG THE PIPE.
27. PROPOSED GAS SERVICE LOCATIONS ARE APPROXIMATE ONLY. THE CONTRACTOR SHALL CONFIRM WITH THE GAS COMPANY THAT GAS LINE INSTALLATION SHALL BE COMPLETED BY THE LOCAL GAS COMPANY. THE CONTRACTOR SHALL GIVE THE GAS COMPANY ADVANCE NOTICE OF WHEN THE GAS LINE CAN BE INSTALLED. THE CONTRACTOR IS RESPONSIBLE FOR ALL EXCAVATION AND BACK FILL AND COMPACTION FOR THE GAS LINE.
28. ALL SEWER PIPE LENGTHS AND SLOPES ARE CALCULATED TO THE CENTER OF STRUCTURES. ALL DRAINAGE PIPE LENGTHS AND SLOPES ARE CALCULATED TO THE OUTSIDE OF STRUCTURES. COORDINATES REFER TO THE CENTER OF STRUCTURES UNLESS OTHERWISE INDICATED OR DETAILED.

TOWN OF WEYMOUTH ZONING REQUIREMENTS

PARCEL SIZE:	55,081 SF (1.264 ACRES)			
ZONING DISTRICT:	GENERAL BUSINESS (B–2)			
OVERLAY DISTRICTS:	VILLAGE CENTER (VC)			
LOT COVERAGE:	REQUIREMENT	44,064± S.F. (80%)		
	PROPOSED	40,266± S.F. (73%)		
		MINIMUM	EXISTING	PROPOSED
DIMENSIONAL REQUIREMENTS:	LOT AREA (VC)	5,000 S.F.	55,081 S.F.	NO CHANGE
	FRONTAGE	40 FT	433.94 FT	NO CHANGE
	FRONT YARD (VC – AVG. OF ADJACENT)	0.8 FT MAX	N/A	1' MIN/4' MAX
	SIDE YARD	NONE*	N/A	2.95'
	REAR YARD	N/A	N/A	N/A – CORNER LOT
	LOT WIDTH	50 FT	340.01 FT	NO CHANGE

*20 FEET TO ABUTTING RESIDENTIAL DISTRICT OR SCHOOL

PARKING:	REQUIREMENTS:	RESIDENTIAL – 1.5 PER UNIT/RETAIL – 1 PER 250 GSF ON FIRST FLOOR (VC) SIZE – 9' x 18' [SEC. 6.12.70(C)] DRIVEWAY WIDTH – 20' MIN (TWO–WAY)
	REQUIRED FOR RESIDENTIAL:	87 UNITS x 1.5 = 131 SPACES
	REQUIRED FOR RETAIL:	10,588 S.F./250 = 43 SPACES
	TOTAL REQUIRED PARKING:	= 174 SPACES
	PROPOSED ON SITE:	112 SPACES INCLUDING 3 HP (INCLUDING SECOND STORY PARKING GARAGE NOT SHOWN)
	PROPOSED OFF SITE:	36 SPACES
	TOTAL PROPOSED PARKING:	148 SPACES
	REFER TO ARCHITECTURAL PLANS FOR ADDITIONAL INFORMATION ON PARKING SPACE LOCATIONS	
LOADING:	REQUIREMENTS:	1 FOR NONRESIDENTIAL UP TO 30,000 S.F., 14' WIDE x 45' LONG x 14' HIGH
	PROPOSED:	1 LOADING SPACE IN AISLE
LANDSCAPE BUFFERS:	REQUIREMENT	IF >10 FEET BETWEEN STRUCTURES, "APPROPRIATELY LANDSCAPED" [SEC. 120–25.4 C. (1) (b)]
	PROPOSED	SEE PLAN
ROADWAY:	JURISDICTION	WEYMOUTH DPW
	CLASSIFICATION	ARTERIAL
	STATUS	PUBLIC WAY; NOT A SCENIC ROAD
FLOOD ZONE: FLOOD MAP	ZONE X AND AE, FIRM MAP NO. 25021C0227E, DATE: JULY 17, 2012 ACCORDING TO NEPONSET VALLEY SURVEY ASSOC., SITE IS ELEVATED ABOVE THE BASE FLOOD ELEVATION 10' AND IS THEREFORE NOT IN THE FLOODPLAIN DISTRICT PER ZONING BYLAW SEC. 120–38.2	

PERMIT PLANS

COMMONWEALTH OF MASSACHUSETTS — JEFFREY A. COUTURE — CIVIL — No. 47084 — REGISTERED PROFESSIONAL ENGINEER

No.	Date	
		Aprvd.
		Chkd.

scale: N.T.S.
date: JAN. 25, 2017
drawn: JDO
checked: JAC
approved: JAC
drawing number: C–2

project: "BROOKPOINT" MIXED–USE PROJECT
4 – 48 COMMERCIAL STREET
WEYMOUTH, MASSACHUSETTS

client: GND REALTY TRUST
61 SOLOMON PIERCE ROAD
LEXINGTON MA 02420

drawing title: CONSTRUCTION NOTES AND ZONING ANALYSIS

SITEC ENVIRONMENTAL
Civil and Environmental Engineering
Land Use Planning and Surveying
Hazardous and Solid Waste Consultants
WWW.SITEC–ENGINEERING.COM
799 Pilot Street, Unit C
Marshfield, MA 02050
PHONE (781) 319–0100
FAX (781) 834–4783

File No. SE14–1036

PLAN REFERENCE	DESCRIPTION
(1)	EASEMENT LANGUAGE TO BE MODIFIED TO ALLOW FOR CONSTRUCTION OF BUILDING.
(2)	EASEMENTS A, B, C, D, AND E TO BE ABANDONED.
(3)	INTERIOR LOT LINE (TYPICAL)
(4)	SEWER PUMP STATION, FENCE, AND ASSOCIATED STRUCTURES TO BE REMOVED PER WEYMOUTH DPW REQUIREMENTS.
(5)	AREA BETWEEN NORTHERN WALL OF PROPOSED BUILDING AND NORTHERN PROPERTY LINE IS PART OF SMELT BROOK "DAYLIGHTING" PROJECT UNDER CONTROL TOWN OF WEYMOUTH. THE DESIGN OF THE DAYLIGHTING, WALKWAYS, LANDSCAPING, AND ASSOCIATED GRADING AND UTILITIES BY OTHERS. DESIGNER TO ENSURE THAT A CONTINUOUS EGRESS ROUTE AND STORMWATER DRAINAGE AWAY FROM BUILDING IS MAINTAINED.
(6)	CLOSE EXISTING DRIVEWAY PER DPW SPECIFICATIONS INSTALL NEW GRANITE CURBING TO MATCH EXISTING. INSTALL BRICK STRIP TO MATCH EXISTING. ADJUST GRADE TO MATCH AND INSTALL NEW CONCRETE.
(7)	MODIFY EXISTING DRIVEWAY TO 24' WIDE AS SHOWN. REMOVE SECTION OF GRANITE CURBING AND BRICK STRIP. INSTALL NEW WHEELCHAIR RAMPS AND CONCRETE APRON.
(8)	PROPOSED NEW 20' WIDE DRIVEWAY MEETING DPW SPECIFICATIONS. REMOVE SECTION OF GRANITE CURBING AND BRICK STRIP. INSTALL NEW WHEELCHAIR RAMPS AND CONCRETE APRON. ADJUST GRADE TO MATCH GUTTER ALONG COMMERCIAL STREET. DRIVEWAY LEADS TO SECOND STORY PARKING GARAGE.
(9)	PROPOSED WHEELCHAIR RAMPS MEETING ADA/AAC REQUIREMENTS.
(10)	PROPOSED CONCRETE WALK – SEE DETAIL. REFER TO ARCHITECTURAL PLANS FOR DIMENSIONS, JOINT LOCATIONS, AND LANDSCAPE FEATURES.
(11)	PROPOSED BUILDING COLUMN (TYPICAL). REFER TO ARCHITECTURAL PLANS FOR LOCATIONS AND ADDITIONAL INFORMATION.
(12)	PROPOSED CONCRETE CURB (TYPICAL) – SEE DETAIL.
(13)	PROPOSED 9'x18' PARKING SPACE (TYPICAL). WHERE PARKING SPACE ABUTS SIDEWALK, INSTALL BOLLARD AND WHEELSTOP (SEE DETAILS). WHERE SPACE ABUTS BUILDING WALL, INSTALL WHEELSTOP.
(14)	PROPOSED DISABLED PARKING SPACE – 8' WIDE WITH 5' WIDE EGRESS. INSTALL ACCESSIBLE SPACE SIGN AND PAVEMENT LEGEND (SEE DETAILS).
(15)	PROPOSED VAN-ACCESSIBLE DISABLED PARKING SPACE – 8' WIDE WITH 8' WIDE EGRESS. INSTALL ACCESSIBLE SPACE SIGN WITH VAN PANEL AND PAVEMENT LEGEND (SEE DETAILS).
(16)	PROPOSED PAINTED PAVEMENT MARKINGS (TYP.)
(17)	PROPOSED STOP LINE, "STOP" PAVEMENT MARKING, AND "STOP" SIGN (R1-1) (TYPICAL).
(18)	PROPOSED 14' HIGH AREA LIGHT
(19)	PROPOSED TRASH ENCLOSURE (SEE DETAIL)
(20)	PROPOSED TRANSFORMER ON CONCRETE PAD, PROTECTED BY BOLLARDS. FOLLOW SPECIFCATIONS OF ELECTRIC UTILITY AND ELECTRICAL PLAN.
(21)	PROPOSED LANDSCAPED AREA. REFER TO LANDSCAPE PLAN. FOR PROPOSED PLANTINGS.
(22)	ADJUSTMENTS TO PUBLIC PARKING LOT. EXISTING PARKING SPACES TO BE RELOCATED. REMOVE ASSOCIATED CURBING. INSTALL NEW CONCRETE CURB AND RESTRIPE AS SHOWN.

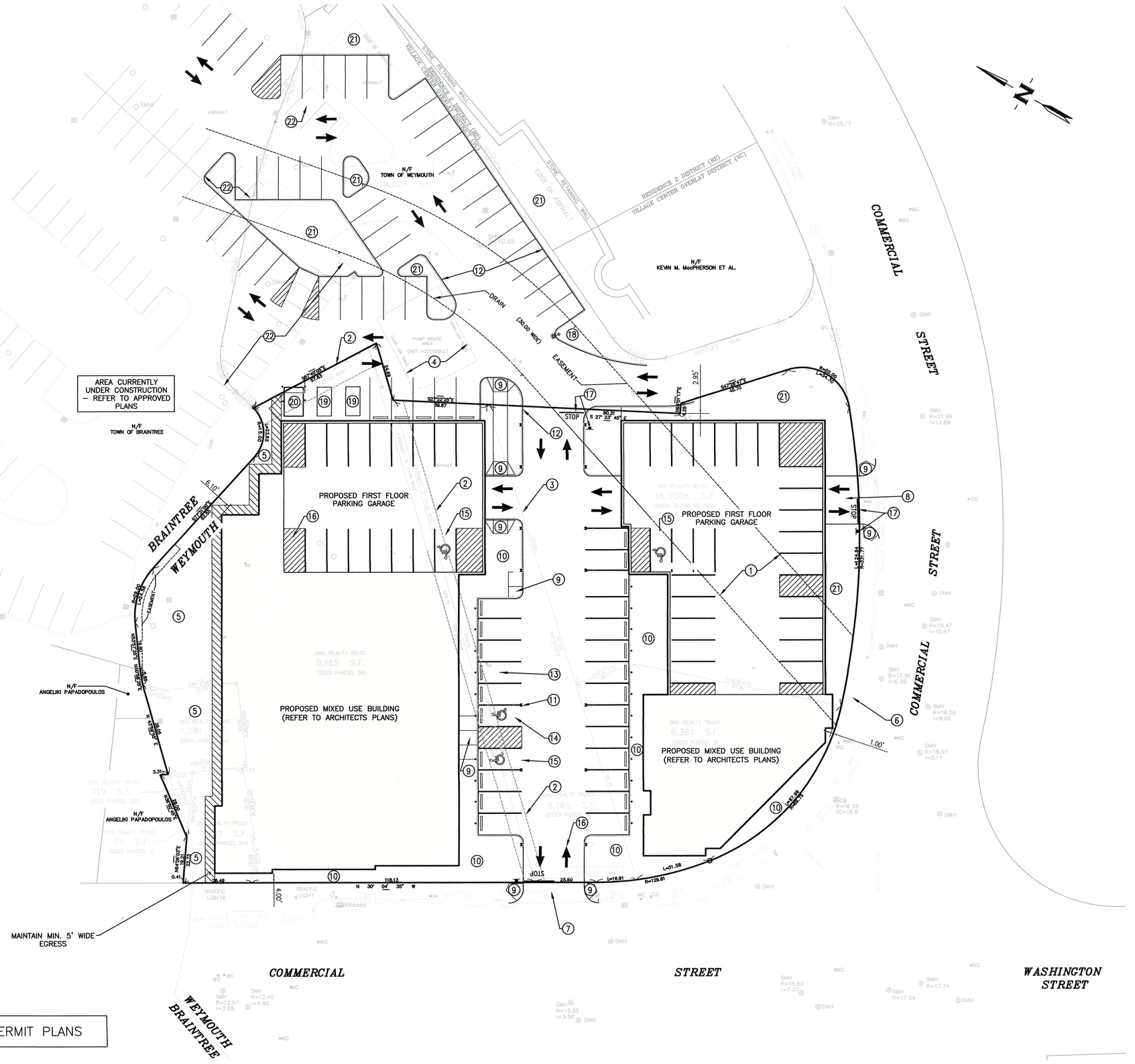

LEGEND:

- PROPERTY LINE
- EXISTING CURB
- EXISTING CATCH BASIN
- EXISTING DRAIN MANHOLE
- EXISTING SEWER MANHOLE
- EXISTING LIGHT POLE
- EXISTING WATER GATE
- EXISTING GAS GATE
- PROPOSED CURB
- PROPOSED TRAFFIC DIRECTION
- PROPOSED HANDICAP ACCESS PARKING
- PROPOSED BUILDING COLUMN

0 20 40 60
SCALE IN FEET: 1"=20'

SEE NOTES ON SHEET C-2

PERMIT PLANS

COMMONWEALTH OF MASSACHUSETTS
JEFFREY A. COUTURE
CIVIL
No. 47084
REGISTERED PROFESSIONAL ENGINEER

No.	Date

aprvd.
chkd.

scale: 1"=20'
date: JAN. 25, 2017
drawn: JDO
checked: JAC
approved: JAC
drawing number: C-3

project: "BROOKPOINT" MIXED-USE PROJECT
4 – 48 COMMERCIAL STREET
WEYMOUTH, MASSACHUSETTS

client: GND REALTY TRUST
61 SOLOMON PIERCE ROAD
LEXINGTON MA 02420

drawing title: SITE LAYOUT

SITEC ENVIRONMENTAL
Civil and Environmental Engineering
Land Use Planning and Surveying
Hazardous and Solid Waste Consultants
WWW.SITEC-ENGINEERING.COM
700 Pleasant Street, Unit C
Marshfield, MA 02050
PHONE (781) 319-0100
FAX (781) 834-4783

File No. SE14-1036

LEGEND:

- PROPERTY LINE
- EXISTING CATCH BASIN
- EXISTING DRAIN MANHOLE
- EXISTING SEWER MANHOLE
- EXISTING LIGHT POLE
- EXISTING WATER GATE
- EXISTING GAS GATE
- EXISTING SPOT GRADE
- 12.12 PROPOSED SPOT GRADE
- 11.50T / 11.00B PROPOSED TOP AND BOTTOM SPOT GRADE
- 19 PROPOSED CONTOUR
- PROPOSED SIGN

AREA CURRENTLY UNDER CONSTRUCTION – REFER TO APPROVED PLANS

PROPOSED FIRST FLOOR PARKING GARAGE EL.=12.00

FINISH FLOOR EL.=12.0

PROPOSED MIXED USE BUILDING (REFER TO ARCHITECTS PLANS)

FIRST FLOOR LEVELS AND PARKING GARAGES AT GRADE SHOWN

FINISH FLOOR EL.=13.0

PROPOSED FIRST FLOOR PARKING GARAGE EL.=12.00

EL.=12.5

EL.=13.0

PROPOSED MIXED USE BUILDING (REFER TO ARCHITECTS PLANS)

FIRST FLOOR LEVELS AND PARKING GARAGES AT GRADE SHOWN

FINISH FLOOR EL.=13.0

BENCHMARK
CENTER OF SMH
RIM EL=11.29 M.S.L.

0′ 20′ 40′ 60′
SCALE IN FEET: 1"=20'

PERMIT PLANS

SEE NOTES ON SHEET C–2

COMMERCIAL STREET

BRAINTREE WEYMOUTH

WASHINGTON STREET

RESIDENCE 2 DISTRICT (R2)
VILLAGE CENTER OVERLAY DISTRICT (VC)

DRAIN (30.00 WIDE)

EASEMENT

MATCH EXISTING CURB

MATCH EXISTING 12.58±
MATCH EXISTING 13.40±
MATCH EXISTING 13.60±
MATCH EXISTING 13.34±

MATCH EXISTING 21.2±
MATCH EXISTING 21.6±
MATCH EXISTING 20.5±
MATCH EXISTING 20.3±

COMMONWEALTH OF MASSACHUSETTS
JEFFREY A. COUTURE
CIVIL
No. 47064
REGISTERED PROFESSIONAL ENGINEER

No.	Date

Aprvd.
Chkd.

scale: 1"=20'
date: JAN. 25, 2017
drawn: JDO
checked: ABT
approved: JAC
drawing number: C–4

project: "BROOKPOINT" MIXED–USE PROJECT
4 – 48 COMMERCIAL STREET
WEYMOUTH, MASSACHUSETTS

client: GND REALTY TRUST
61 SOLOMON PIERCE ROAD
LEXINGTON MA 02420

drawing title: SITE GRADING

SITEC ENVIRONMENTAL
Civil and Environmental Engineering
Land Use Planning and Surveying
Hazardous and Solid Waste Consultants
WWW.SITEC-ENGINEERING.COM
769 Plain Street, Unit C
Marshfield, MA 02050
PHONE (781) 319–0100
FAX (781) 834–4783

File No. SE14–1036

LEGEND:

- PROPERTY LINE
- EXISTING CATCH BASIN (CB)
- EXISTING DRAIN MANHOLE (DMH)
- EXISTING SEWER MANHOLE (SMH)
- EXISTING LIGHT POLE (U.L.P.)
- EXISTING WATER GATE (W.G.)
- EXISTING GAS GATE (G.G.)
- EXISTING WATER PIPING (W)
- EXISTING STORM DRAIN PIPING (D)
- EXISTING GAS PIPING (G)
- EXISTING OVERHEAD UTILITIES (O.H.W.)
- EXISTING SEWER PIPING (S)
- EXISTING UNDERGROUND ELECTRIC (E)
- EXISTING UTILITY POLE (U.L.P. #81)
- PROPOSED WATER PIPING (W)
- PROPOSED WATER GATE (WG)
- PROPOSED SEWER PIPING (S)
- PROPOSED SEWER MANHOLE (SMH)
- PROPOSED STORM DRAIN PIPING (D)
- PROPOSED CATCH BASIN (CB)
- PROPOSED DRAIN MANHOLE (DMH)
- PROPOSED GAS PIPING (G)

PLAN REFERENCE	DESCRIPTION
(A)	ROOF DRAIN CROSSES OVER SEWER SERVICE ROOF DRAIN BOTTOM PIPE = 9.57 SEWER SERVICE TOP OF PIPE = 6.56 3.01 FEET OF VERTICAL CLEARANCE PROVIDED
(B)	ALL SLOPES AND INVERTS OF EXISTING 24" SEWER DERIVED FROM INVERT AND TOP OF PIPE ELEVATIONS SUPPLIED BY NEPONSET VALLEY SURVEY ASSOCIATES

PERMIT PLANS

0 20 40 60

SCALE IN FEET: 1"=20'

SEE NOTES ON SHEET C-2

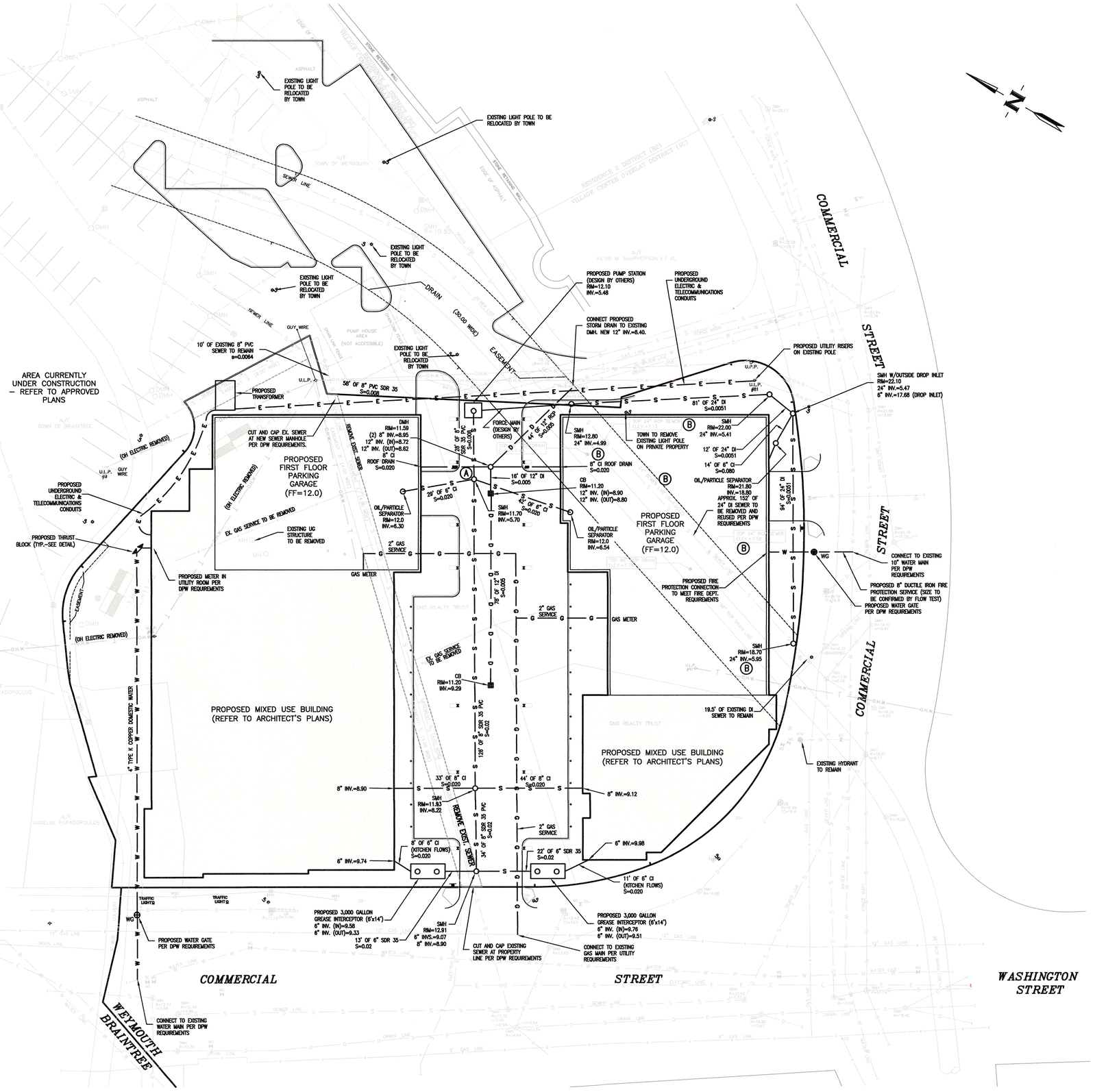

No.	Date	Aprvd.	Chkd.

scale: 1"=20'
date: JAN. 25, 2017
drawn: JDO
checked: JAC
approved: JAC
drawing number: C-5

project: PROPOSED MIXED-USE PROJECT
4 – 48 COMMERCIAL STREET
WEYMOUTH, MASSACHUSETTS

client: GND REALTY TRUST
61 SOLOMON PIERCE ROAD
LEXINGTON MA 02420

drawing title: SITE UTILITIES

SITEC ENVIRONMENTAL
Civil and Environmental Engineering
Land Use Planning and Surveying
Hazardous and Solid Waste Consultants
WWW.SITEC-ENGINEERING.COM
788 Plain Street, Unit C
Marshfield, MA 02050
PHONE (781) 319-0100
FAX (781) 834-4783

File No. SE14-1036

GENERAL PLANTING NOTES

1. All new lawn areas shall receive a minimum of 6 inches topsoil of the proper pH and organic content suitable for the healthy growth of lawns. These areas shall be seeded with a fine blade lawn grass seed.
2. All tree and shrub pits shall be at least 2 feet wider and 1 foot deeper than the tree or shrub root ball to be planted in it. Backfill shall be high quality loam of the proper pH and organic content suitable for the healthy growth of plant materials.
3. All areas to be mulched shall receive 4 inches minimum 100% shredded bark mulch within 48 hours of planting. Unless otherwise noted in planting details.
4. All plants shall be nursery grown and conform to the latest edition of "ANSI Z60.1, American Standard for Nursery Stock."
5. Plants shall conform to the botanical name as indicated in the latest edition of "American Joint Committee of Horticultural Nomenclature, Standardized Plant Names."
6. Plants shall be handled at all times in accordance with the best horticultural practices. Plants in-leaf shall be sprayed with anti-desiccant before digging. Plants shall be dug with firm natural balls and shall conform to the ratios and sizes specified in ANSI Z60.1. B & B plants shall be wrapped in burlap and tied firmly. Plant materials shall be delivered immediately prior to placement, shall be kept moist and shall be protected from sun and wind. Plants having broken or cracked balls prior to or during planting will not be accepted.
7. All trunks of deciduous trees shall be wrapped immediately after planting with tree wrap. Wrap shall be wound spirally, from the bottom of the trunk to the second branches. All trees shall be staked or guyed immediately after planting in accordance with best horticultural practices.
8. The periods for planting shall be from March 15 to May 15 and from September 15 to November 15, weather permitting.
9. All disturbed areas shall be loamed and seeded as directed in note #1 above.
10. All locations of existing utilities may not be shown on this plan. See other plan sheets for utility locations. Contractor shall be solely responsible for determining actual locations of existing utilities. Utility conflicts may require adjustments to proposed construction. Contractor shall be responsible for repair of any utilities damaged during construction.

PLANT LIST

KEY	NO.	COMMON NAME	BOTANICAL NAME	SIZE
DL	64	STELLA D'ORO DAYLILY	HEMEROCALLIS STELLA D'ORO	1 GAL.
CP	7	CLEVELAND PEAR	PYRUS CALLERYANA CLEVELAND SELECT	2.5"-3" CAL.
GB	36	GREEN VELVET BOXWOOD	BUXUS MICROPHYLLA GREEN VELVET	1.5 GAL.
RR	7	CATAWBA RHODODENDRON	RHODODENDRON CATAWBIENSE	5 GAL.
MSA	6	ADAGIO JAPANESE SILVER GRASS	MISCANTHUS SINENSIS "ADAGIO"	1 GAL.

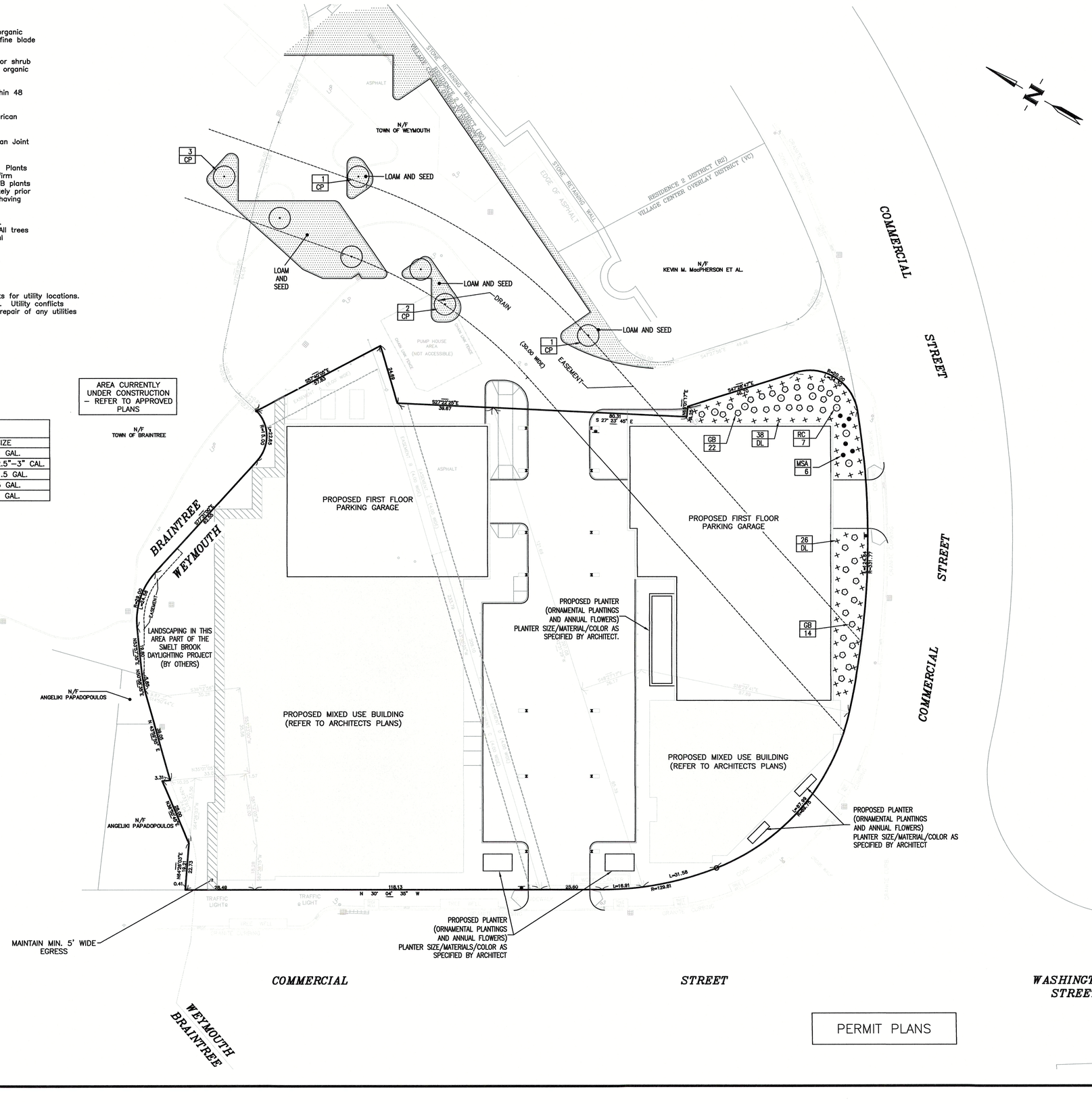

PERMIT PLANS

SEE NOTES ON SHEET C-2

COMMONWEALTH OF MASSACHUSETTS
JEFFREY J. COUTURE
CIVIL
No. 47084
REGISTERED PROFESSIONAL ENGINEER

No.	Date	Chkd.	Aprvd.

scale: 1"=20'
date: JAN. 25, 2017
drawn: JDO
checked: JAC
approved: JAC
drawing number: C-6

project: "BROOKPOINT" MIXED-USE PROJECT
4 - 48 COMMERCIAL STREET
WEYMOUTH, MASSACHUSETTS

client: GND REALTY TRUST
61 SOLOMON PIERCE ROAD
LEXINGTON MA 02420

drawing title: SITE LANDSCAPING

SITEC ENVIRONMENTAL
Civil and Environmental Engineering
Land Use Planning and Surveying
Hazardous and Solid Waste Consultants
WWW.SITEC-ENGINEERING.COM
799 Plain Street, Unit C
Marshfield, MA 02050
PHONE (781) 319-0100
FAX (781) 834-4783

File No. SE14-1036

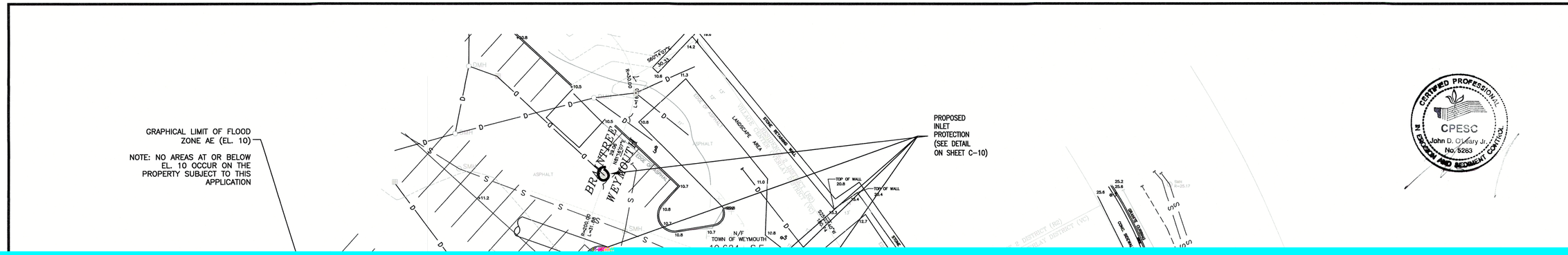
GRAPHICAL LIMIT OF FLOOD ZONE AE (EL. 10)
NOTE: NO AREAS AT OR BELOW EL. 10 OCCUR ON THE PROPERTY SUBJECT TO THIS APPLICATION
PROPOSED INLET PROTECTION (SEE DETAIL ON SHEET C-10)
BRAINTREE
WEYMOUTH
N/F TOWN OF WEYMOUTH
LANDSCAPE AREA
STONE RETAINING WALL
TOP OF WALL
ASPHALT
CERTIFIED PROFESSIONAL
CPESC
John D. O'Leary Jr.
No. 5283
IN EROSION AND SEDIMENT CONTROL
COMMONWEALTH OF MASSACHUSETTS
JEFFREY A. COUTURE
CIVIL
No. 47084
REGISTERED PROFESSIONAL ENGINEER
Chkd.
Aprvd.

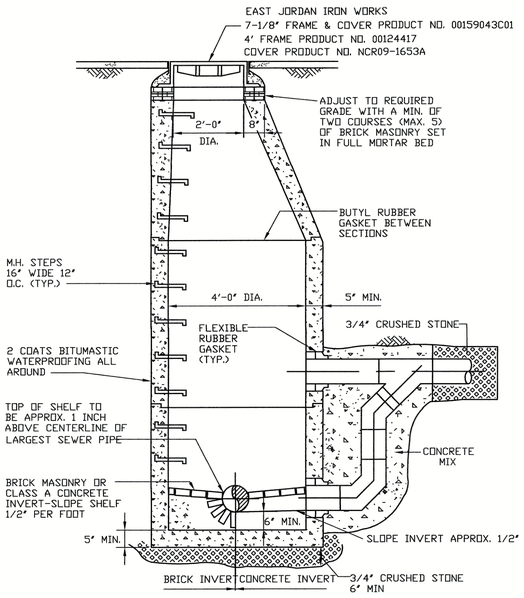

NOTES:

1. ALL NEW SEWER MANHOLES ARE SUBJECT TO VACUUM TESTING.

2. ALL BRICK MASONRY TO BE SOLID ASTM C-32, GRADE SM MOLDED (NON-FROGGED) AS MANUFACTURED BY STYLES & HART BRICK CO., OR EQUAL.

3. ALL PIPES MUST MEET AT THE BRICK MASONRY INVERT. IF NOT, AN INSIDE DROP MUST BE CONSTRUCTED.

TOWN OF WEYMOUTH D.P.W. ENGINEERING DIVISION	STANDARD DRAWING S-02 OUTSIDE DROP INVERT-SEWER MANHOLE	FILE NAME: S-02.DWG; DW'N BY: RFL; CHK'D BY: JEM; DATE: NOV. 30, 2010; SCALE: NOT TO SCALE

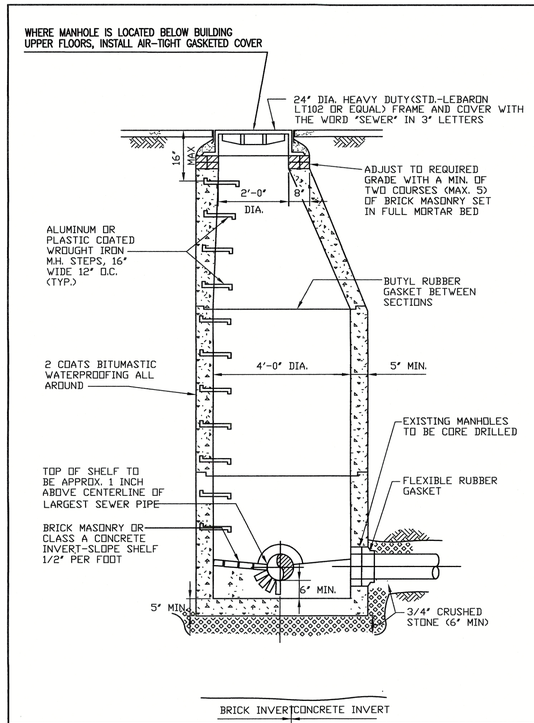

TOWN OF WEYMOUTH D.P.W. ENGINEERING DIVISION	STANDARD DRAWING S-01 SEWER MANHOLE	FILE NAME: S-01.DWG; DW'N BY: J.M.P.; CHK'D BY: R.F.L.; DATE: JULY 6, 2001; SCALE: NOT TO SCALE

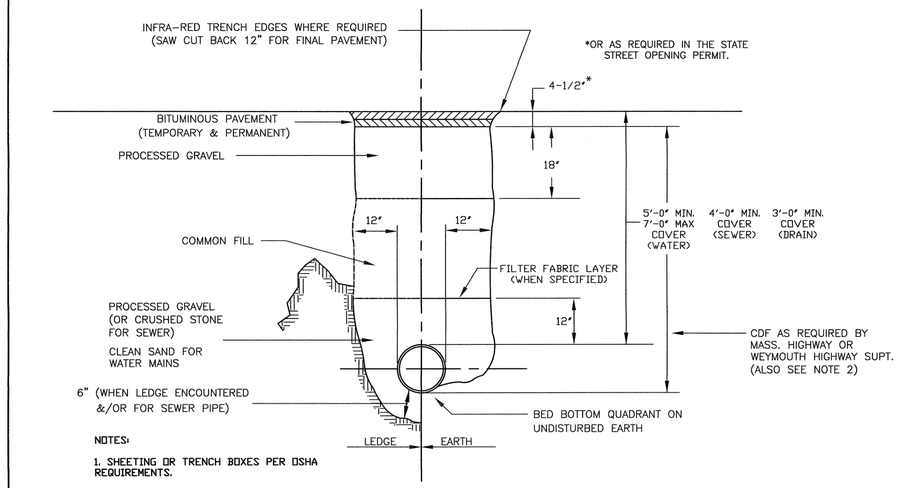

NOTES:

1. SHEETING OR TRENCH BOXES PER OSHA REQUIREMENTS.

2. WHEN CDF BACKFILL IS USED IN NON-STATE ROADS, ¾" CRUSHED STONE BACKFILL SHALL BE PLACED AROUND PIPE UP TO 1' ABOVE PIPE (EXCEPT FOR WATER PIPE WHICH WILL USE SAND FOR UP TO 1' ABOVE PIPE).

3. WHEN CDF BACKFILL IS USED IN STATE ROADS, ¾" CRUSHED STONE BACKFILL IS ALLOWED AS BACKFILL AND PLACED AROUND PIPE UP TO 1 FOOT ABOVE THE TOP OF THE PIPE (EXCEPT FOR WATER PIPES WHICH WILL USE SAND AS BACKFILL MATERIAL).

TOWN OF WEYMOUTH D.P.W. ENGINEERING DIVISION	STANDARD DRAWING A-02 TRENCH DETAIL	FILE NAME: A-02.dwg; DW'N BY: GTS/JEM; CHK'D BY: JJB; DATE: SEPT. 28, 2006; SCALE: NOT TO SCALE

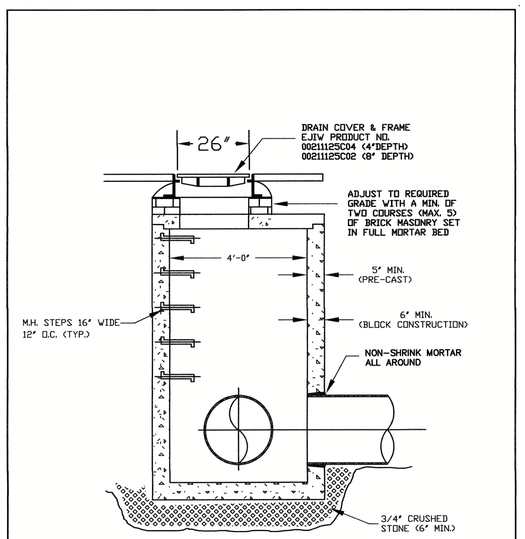

TOWN OF WEYMOUTH D.P.W. ENGINEERING DIVISION	STANDARD DRAWING D-10 DRAIN MANHOLE FLAT TOP	FILE NAME: D-10.DWG; DW'N BY: JEM; CHK'D BY: JEM; DATE: 11/28/99; SCALE: NOT TO SCALE

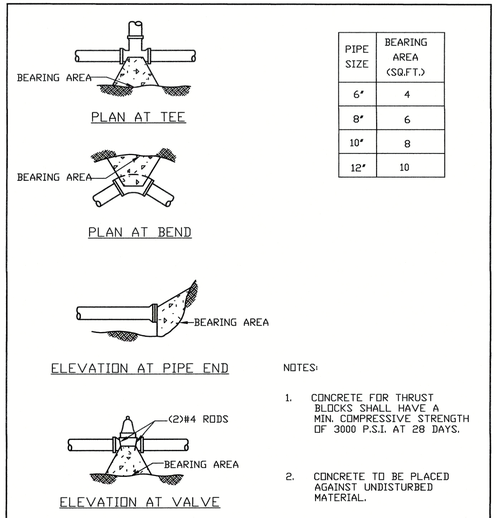

PIPE SIZE	BEARING AREA (SQ.FT.)
6"	4
8"	6
10"	8
12"	10

NOTES:

1. CONCRETE FOR THRUST BLOCKS SHALL HAVE A MIN. COMPRESSIVE STRENGTH OF 3000 P.S.I. AT 28 DAYS.

2. CONCRETE TO BE PLACED AGAINST UNDISTURBED MATERIAL.

THRUST BLOCK DETAILS
NOT TO SCALE

TOWN OF WEYMOUTH D.P.W. ENGINEERING DIVISION	STANDARD DRAWING W-02 THRUST BLOCK DETAILS	FILE NAME: W-02.DWG; DW'N BY: JMP.; CHK'D BY: R.F.L.; DATE: JULY 6, 2001; SCALE: NOT TO SCALE

PERMIT PLANS

JEFFREY A. COUTURE No. 37864 REGISTERED PROFESSIONAL ENGINEER COMMONWEALTH OF MASSACHUSETTS

No.	Date	Chkd.	Aprvd.

scale: N.T.S.
date: JAN. 25, 2017
drawn: JDO
checked: JAC
approved: JAC
drawing number: C-8

project: "BROOKPOINT" MIXED-USE PROJECT
4 - 48 COMMERCIAL STREET
WEYMOUTH, MASSACHUSETTS

client: GND REALTY TRUST
61 SOLOMON PIERCE ROAD
LEXINGTON MA 02420

drawing title: SITE DETAILS

SITEC ENVIRONMENTAL
Civil and Environmental Engineering
Land Use Planning and Surveying
Hazardous and Solid Waste Consultants
WWW.SITEC-ENGINEERING.COM
768 Plain Street, Unit C
Marshfield, MA 02050
PHONE (781) 319-0100
FAX (781) 834-4783

File No. SE14-1036

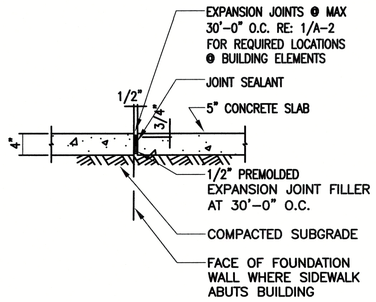

ADDITIONAL DETAILS OF EXPANSION JOINT

(NOT TO SCALE)

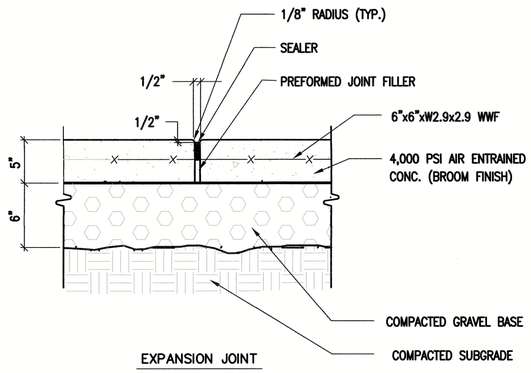

TYP. CONC. SIDEWALK DETAILS

(NOT TO SCALE)

NOTES:
1. SEE SITE PLAN FOR WIDTH AND GRADES
2. PROVIDE MINIMUM 1/8"/FT. CROSS-SLOPE
3. PROVIDE CONTROL JOINTS 5'- 0" O.C. MIN.
4. PROVIDE EXPANSION JOINTS 20'- 0" O.C. MIN.

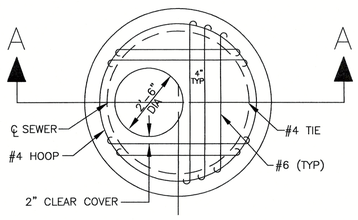

PLAN

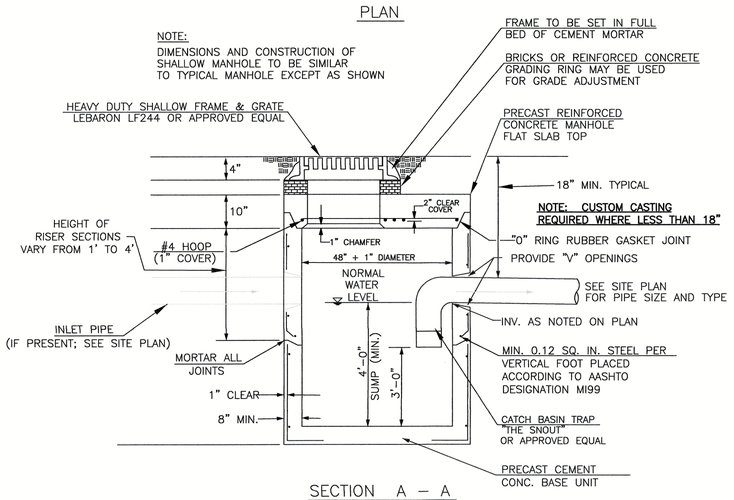

SECTION A – A

FLAT TOP

SHALLOW DEEP SUMP CATCH BASIN

(NOT TO SCALE)

INLET	D	A	B
4"	3'-6"	3'-0"	2'-6"
5"	3'-6" 3'-6" X 3'-6" 4'-0" 4'-0" X 4'-0" 4'-6"	5'-0" 4'-0" 3'-6" 3'-0" 3'-0"	4'-0" 3'-0" 3'-0" 2'-6" 2'-6"
6"	4'-0" 4'-0" X 4'-0" 4'-6" 4'-6" X4'-6" 5'-0" 5'-0" X 5'-0"	5'-0" 4'-0" 4'-0" 3'-6" 3'-6" 3'-0"	4'-6" 3'-6" 3'-6" 3'-0" 3'-0" 2'-6"
8"	5'-0" 5'-6" X 5'-6" 6'-0" 6'-0" X 6'-0" 6'-6" 6'-6" X 6'-6"	6'-0" 4'-6" 4'-0" 3'-0" 3'-6" 3'-0"	5'-0" 4'-0" 3'-6" 2'-6" 3'-0" 2'-6"
10"	5'-6" 6'-0" X 6'-0" 6'-0" 6'-6" X 6'-6"	7'-6" 5'-6" 6'-6" 5'-0"	6'-6" 4'-6" 5'-6" 4'-0"

NOTES:

PIPE MATERIALS ALLOWED:

A. NO-HUB CAST IRON WITH PRODUCT-APPROVED STAINLESS STEEL CLAMPS.

B. SERVICE-WEIGHT CAST IRON WITH PRODUCT-APPROVED RESILIENT GASKETS OR LEAD AND OAKUM JOINTS.

C. EXTRA-HEAVY CAST IRON WITH PRODUCT-APPROVED RESILIENT GASKETS OR LEAD AND OAKUM JOINTS.

D. FOR INLETS LARGER THAN 10" THE DESIGN AND DIMENSIONS WILL BE DETERMINED ON A CASE-BY-CASE BASIS BY THE LOCAL AUTHORITY.

E. PRE-CAST SPERATORS ARE TO HAVE ALL SPECIFIED HOLES EITHER CORE-BORED OR CAST IN PLACE.

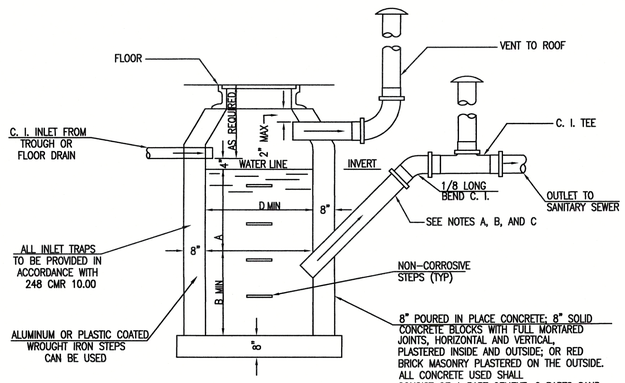

GASOLINE, OIL, AND SAND SEPARATOR

FROM 248 CMR 10.00, FIGURE 15
NOT TO SCALE

GENERAL CONSTRUCTION NOTES

1. BASIN TO BE LOCATED OUTSIDE BUILDING WHERE POSSIBLE, COVER TO HAVE A CENTER HOLE.
2. AN AIR-TIGHT GASKETED COVER, BOLTED DOWN, MUST BE BE USED IF SEPARATOR IS LOCATED INSIDE OF BUILDING.
3. OPENING SHALL BE NOT LESS THAN 24" DIA.
4. THE CATCH BASIN SHALL BE SO LOCATED AND CONSTRUCTED THAT SURFACE WATER SHALL BE EXCLUDED.
5. INLET PIPE SHALL BE AT LEAST FOUR INCHES ABOVE NORMAL WATER LINE.
6. WHERE SUBJECT TO FROST OR CRUSHING CONDITIONS, OUTLET SHALL BE AT LEAST THREE FEET BELOW THE SURFACE.
7. THE NEW CATCH BASIN MUST BE FILLED WITH CLEAN WATER BEFORE USING, AND AFTER BEING EMPTIED FOR PERIODIC CLEANING.
8. ALL OIL AND GASOLINE MUST BE REMOVED BEFORE CLEANING OUT THE BASIN, AND MUST NOT BE DISCHARGED INTO THE SEWER THROUGH OTHER FIXTURES.
9. SPECIFICATIONS FOR COVERING SPECIAL CASES OR CONDITIONS, SHALL BE APPROVED BY THE LOCAL AUTHORITIES.
10. STEPS SHALL BE SPACED ABOUT 18" APART.
11. BOTH VENTS SHALL BE EXTENDED INDEPENDENTLY 18" ABOVE THE ROOF, OR AS APPROVED BY THE LOCAL AUTHORITIES.

PERMIT PLANS

SITEC ENVIRONMENTAL
Civil and Environmental Engineering
Land Use Planning and Permitting
Hazardous and Solid Waste Consultants
WWW.SITEC-ENGINEERING.COM
789 Plain Street, Unit C
Marshfield, MA 02050
PH (781) 834-0000
FAX (781) 834-4783

COMMONWEALTH OF MASSACHUSETTS
JEFFREY A. DOUCETTE
CIVIL
No. 47084
REGISTERED PROFESSIONAL ENGINEER

No.	Date

Aprvd.
Chkd.

scale: N.T.S.
date: JAN. 25, 2017
drawn: JDO
checked: JAC
approved: JAC
drawing number: C-9

project: "BROOKPOINT" MIXED-USE PROJECT
4 – 48 COMMERCIAL STREET
WEYMOUTH, MASSACHUSETTS

client: GND REALTY TRUST
61 SOLOMON PIERCE ROAD
LEXINGTON MA 02420

drawing title: SITE DETAILS

File No. SE14-1036

NOTES FOR EROSION CONTROL PRACTICES

1. SEEDING AND MULCHING. TOPSOIL STRIPPED AND STOCKPILED ON THE SITE AS WELL AS UNFINISHED AREAS THAT WILL NOT BE WORKED ON FOR ONE MONTH, OR WILL BE WINTERED SHALL BE IMMEDIATELY SEEDED WITH EROSION CONTROL SEED MIX AND MULCHED WITH HAY. EXPOSED EARTHWORK AREAS, WHICH WILL NOT BE WORKED ON FOR MORE THAN ONE WEEK WILL BE HAY MULCHED.

   TYPICAL APPLICATION RATES FOR STRAW OR GRASS MULCH ARE 3,000–4,000 LBS/ACRE. MULCH SHOULD BE ANCHORED MECHANICALLY OR BY USE OF TACKING MATERIAL OR HYDROMULCH.

   EROSION CONTROL NETTING OR MESH WILL BE PLACED ON SLOPED AREAS TO BE SEEDED AS REQUIRED.

2. GRASS SEED MIXTURE. NOT MORE THAN 0.5% BY WEIGHT SHALL BE WEED SEED AND NOT THAN 1.75% BY WEIGHT CROP SEED. DRY, MOLD–FREE SEED SHALL BE DELIVERED TO THE SITE IN SEALED CONTAINERS, LABELED WITH THE NAME OF THE SEED GROWER AND MIXTURE. SEED SHALL CONFORM TO THE FOLLOWING SPECIFICATIONS:

TYPE	% OF TOTAL WEIGHT IN MIXTURE
KENTUCKY BLUEGRASS CULTIVARS	60
RED FESCUE	30
ANNUAL RYE GRASS	10

   SLURRY MIXTURE BY HYDROSEEDING APPLICATION SHALL CONFORM TO THE FOLLOWING:

QUANTITY PER 1000 SQ. FT.	MATERIAL
27–1/2 LB.	WOOD FIBER MULCH
4–1/2 LB.	SEED
22 LB.	10–6–4 FERTILIZER
69 GAL.	WATER

3. SEED COVER. SEED SHALL BE PLACED ON A NATURAL, FERTILE SOIL POSSESSING THE CHARACTERISTICS OF PRODUCTIVE SOILS IN THE VICINITY OF THE PROJECT. GRASS SEED SHALL BE SPREAD BY MECHANICAL SPREADER AT SPECIFIED RATE. FOLLOWING SEEDING, THE AREA SHALL BE LIGHTLY RAKED, SMOOTHED AND ROLLED.

   THE ENTIRE AREA SHALL BE WATERED UNTIL THE EQUIVALENT OF A 2–INCH DEPTH OF WATER HAS BEEN APPLIED TO THE SEEDED SURFACE, AT A RATE WHICH WILL NOT DISLODGE THE SEED. WATERING SHALL BE REPEATED THEREAFTER AS FREQUENTLY AS REQUIRED TO PREVENT DRYING OF THE SURFACE, UNTIL GRASS ATTAINS AN AVERAGE HEIGHT OF 1.5 INCHES.

   THE SPECIFICATIONS ABOVE ALSO APPLY TO THE HYDROSEEDING METHOD IF EMPLOYED. AFTER GRASS APPEARS UNDER EITHER METHOD, ALL AREAS WHICH FAIL TO SHOW A UNIFORM STAND OF GRASS, FOR ANY REASON WHATSOEVER, SHALL BE RESEEDED AND SUCH AREAS AND PARTS OF AREAS SEEDED REPEATEDLY UNTIL ALL AREAS ARE COVERED WITH A SATISFACTORY GROWTH OF GRASS.

4. DRAINAGE DITCHES AND EMBANKMENTS. TEMPORARY DRAINAGE DITCHES SHALL BE PROVIDED WITH BALED HAY EROSION CHECK DAMS SPACED NO GREATER THAN 100 FEET APART. RIP–RAP SHALL BE PLACED AT ALL INLETS AND OUTLETS OF CULVERTS AND PIPE OUTFALLS.

5. MISCELLANEOUS. ALL EROSION CONTROL DEVICES MUST BE CONSTRUCTED IN ACCORDANCE WITH THE DETAILS SHOWN.
   ALL EROSION CONTROL STRUCTURES SHALL BE CHECKED TWICE EACH MONTH AND AFTER EACH STORM EVENT AND REPAIRED AND MAINTAINED AS NECESSARY.

(A) SILTATION BARRIER

NOT TO SCALE

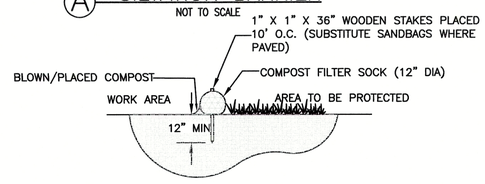

SECTION

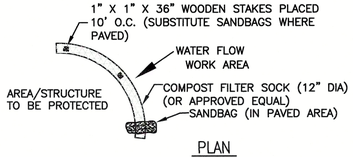

PLAN

NOTES:
1. INSPECT AND MAINTAIN THROUGHOUT CONSTRUCTION
2. SOCK AND COMPOST MATERIAL TO BE REMOVED FROM SITE WHEN CONSTRUCTION COMPLETE.

(B) INLET PROTECTION

NOT TO SCALE

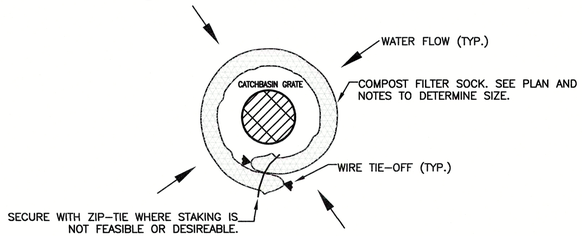

PLAN

NOTES:

1. OVERLAP ENDS OF SOCK PER MANUFACTURERS RECOMMENDATIONS – ONE FOOT MINIMUM, 3 FEET MAXIMUM.
2. USE 8"–12" DIA. SOCK IN CURBSIDE OR TRAFFICED AREAS.
3. USE 12"–18" DIA. SOCK IN NON–TRAFFICED AREAS.
4. INSPECT AND MAINTAIN THROUGHOUT CONSTRUCTION.
5. SOCK AND COMPOST MATERIAL TO BE REMOVED FROM SITE WHEN CONSTRUCTION IS COMPLETE.

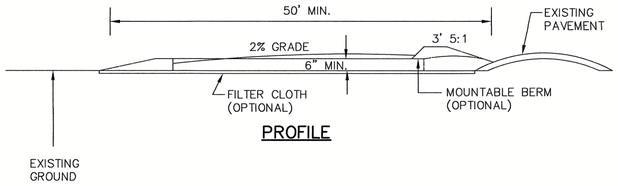

PROFILE

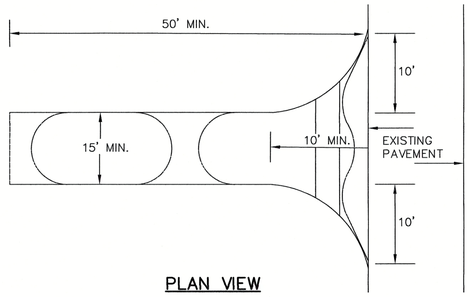

PLAN VIEW

TEMPORARY GRAVEL CONSTRUCTION ENTRANCE/EXIT

NOT TO SCALE

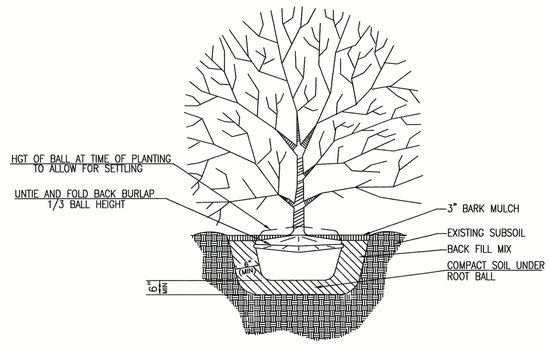

SHRUB PLANTING DETAIL

(NOT TO SCALE)

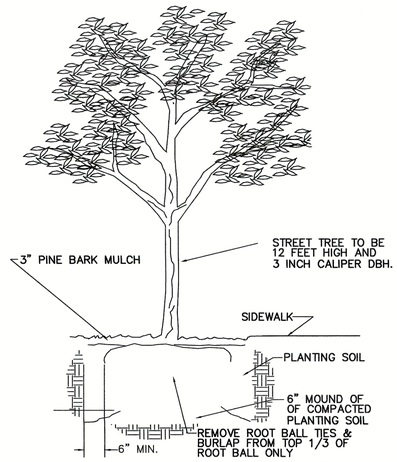

TYPICAL TREE PLANTING DETAIL

(NOT TO SCALE)

DEEP OBSERVATION HOLE LOG

DEEP HOLE NUMBER: TH 1
DATE: 2–21–2014 SURFACE ELEVATION: 11.0±

PERFORMED BY: JACK O'LEARY SE1785/SITEC ENVIRONMENTAL

DEPTH (INCHES)	SOIL HORIZON	SOIL TEXTURE (USDA)	SOIL COLOR/ MOTTLING	OTHER (STRUCTURE, STONES, BOULDERS, CONSISTENCY, % GRAVEL)
0 – 2	FILL	–	–	ASPHALT PAVEMENT
2 – 18	FILL	GRAVELLY SANDY LOAM	2.5 YR 6/4	SINGLE GRAIN, LOOSE, 30% COBBLES ANGULAR STONE; FROST TO 12"
18 – 84	FILL	GRAVELLY LOAMY SAND	10 YR 4/4 MOTTLING @ 70", 30%, 10 YR 6/6	SINGLE GRAIN, LOOSE, 40%+COBBLES ANGULAR STONE AND BRICKS
84 – 92	A	SILTY CLAY LOAM	10 Y 5/2	MASSIVE, FIRM, BURIED MARSH
92 – 108	B	SILTY CLAY LOAM	2.5 YR 5/2	MASSIVE, FIRM
108 – 118	Cd	SILT LOAM	10 YR 6/6	MASSIVE, FIRM

ESTIMATED SEASONAL HIGH GROUND WATER: DEPTH 70" / ELEVATION 5.2'
STANDING WATER OBSERVED: 112" AFTER 1 HOUR

DEEP OBSERVATION HOLE LOG

DEEP HOLE NUMBER: TH 2
DATE: 2–21–2014 SURFACE ELEVATION: 11.0±

PERFORMED BY: JACK O'LEARY SE1785/SITEC ENVIRONMENTAL

DEPTH (INCHES)	SOIL HORIZON	SOIL TEXTURE (USDA)	SOIL COLOR/ MOTTLING	OTHER (STRUCTURE, STONES, BOULDERS, CONSISTENCY, % GRAVEL)
0 – 2	FILL	–	–	ASPHALT PAVEMENT
2 – 66	FILL	LOAMY SAND	–	60% GRAVEL; 40% COBBLES ANGULAR GRANITE SLABS; BRICKS
				REFUSAL DUE TO SIZE OF BLOCKS

ESTIMATED SEASONAL HIGH GROUND WATER: NOT DETERMINED
STANDING WATER OBSERVED: NOT OBSERVED

PERMIT PLANS

COMMONWEALTH OF MASSACHUSETTS — JEFFREY M. CIRILLIE — CIVIL — No. 47304 — REGISTERED PROFESSIONAL ENGINEER

No.	Date	Chkd.	Aprvd.

scale: N.T.S.
date: JAN. 25, 2017
drawn: JDO
checked: JAC
approved: JAC
drawing number: C–10

project: "BROOKPOINT" MIXED–USE PROJECT
4 – 48 COMMERCIAL STREET
WEYMOUTH, MASSACHUSETTS

client: GND REALTY TRUST
61 SOLOMON PIERCE ROAD
LEXINGTON MA 02420

drawing title: SITE DETAILS

SITEC ENVIRONMENTAL
Civil and Environmental Engineering
Land Use Planning and Surveying
Hazardous and Solid Waste Consultants
WWW.SITEC–ENGINEERING.COM
789 Plain Street, Unit c
Marshfield, MA 02050
PHONE (781) 319–0100
FAX (781) 834–4783

File No. SE14–1036

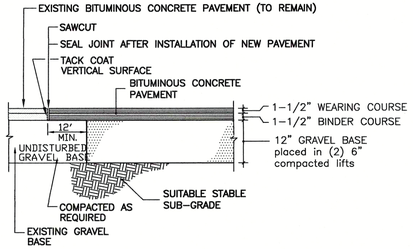

BITUMINOUS CONCRETE SECTION

NOT TO SCALE

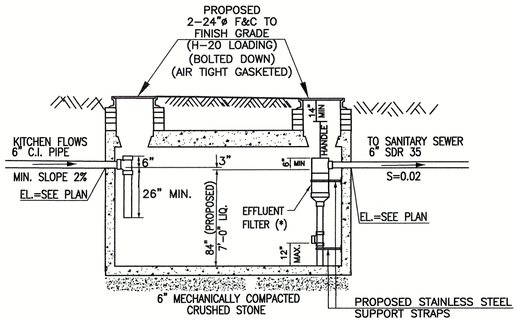

PROPOSED
3,000 GALLON GREASE TRAP

(WATERPROOFED; BUTYL JOINT SEAL; BOOT SEALS)
TANK DIMENSIONS: 6'0" x 14'-0" x 7'-0" LIQUID DEPTH
(H-20 LOADING)

(3,000 GAL. PRECAST CONCRETE
SEPTIC TANK W/1 PVC SCH 40 INLET TEE
SCITUATE RAY PRECAST 5'x13' H20 3000 GALLON
OR EQUAL)

(*) A300-12x36-VCF WITH 1/32" FILTRATION (CAP.>1,000 GPD) COMMERCIAL ZABEL FILTER
OR AN APPROVED EQUAL. STANDOFF PIPE TO EXTEND TO THE BOTTOM OF THE TANK FOR SUPPORT

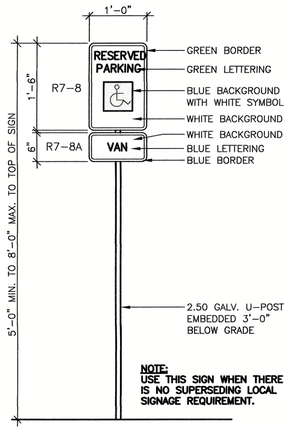

A.D.A. ACCESSIBLE PARKING SIGN

NOT TO SCALE

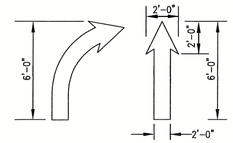

NOTE:
PAINT TO BE ONE COAT OF STANDARD DRY OIL BASED PAINT FOR MARKING ASPHALT OR CONCRETE, SPRAY APPLICATION. WHITE UNLESS OTHERWISE NOTED.

PAINTED TRAFFIC ARROW

(NOT TO SCALE)

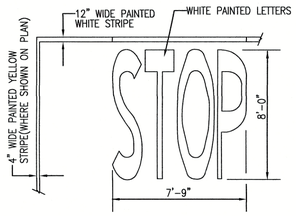

PAINTED "STOP" DETAIL

(NOT TO SCALE)

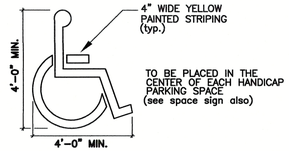

HANDICAP PARKING SPACE INDICATOR

NOT TO SCALE

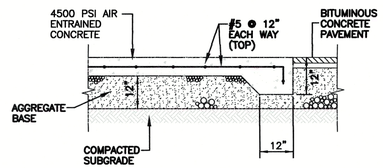

DUMPSTER PAD CONCRETE DETAIL

NOT TO SCALE

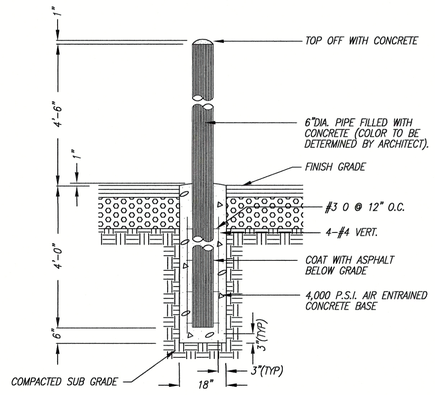

BOLLARD DETAIL

(NOT TO SCALE)

NOTE:
FOR GENERAL SITE USE. FOR BOLLARDS ASSOCIATED WITH THE BUILDING, REFER TO ARCHITECTURAL PLANS FOR SIZE & LOCATION.

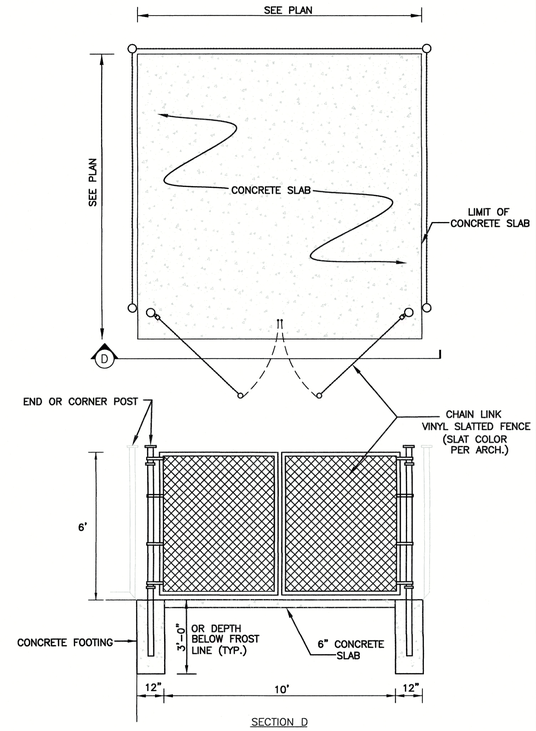

SECTION D

TRASH ENCLOSURE DETAIL

NOT TO SCALE

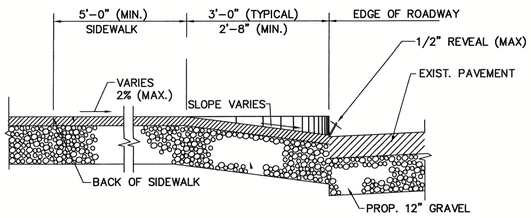

SECTION A-A

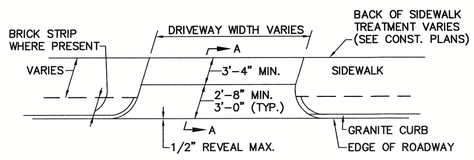

TYPICAL SIDEWALK AND DRIVEWAY LAYOUT

(NOT TO SCALE)

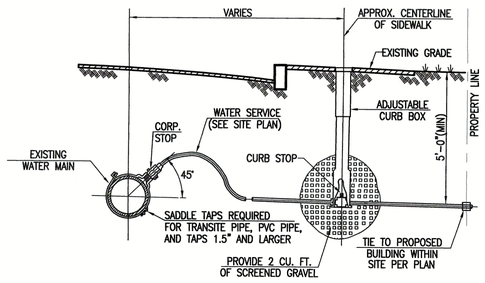

TYPICAL WATER CONNECTION

NOT TO SCALE

NOTES:

SERVICE PIPE MATERIAL REQUIREMENTS OF WEYMOUTH DPW:

A. DOMESTIC SERVICE: TYPE K COPPER FROM MAIN TO PROPERTY LINE

B. FIRE CONNECTION: DUCTILE IRON

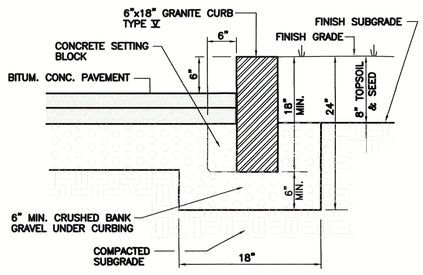

NOTE:
INSTALL WITHIN ALL PUBLIC WAYS, CORNERS, AND RADIUS SECTIONS.

VERTICAL GRANITE CURB

NOT TO SCALE

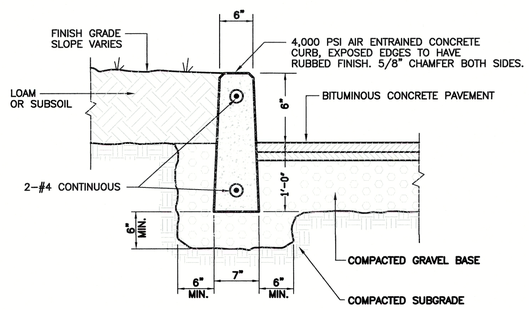

PRECAST CONCRETE CURB

NOT TO SCALE

PERMIT PLANS

SITEC ENVIRONMENTAL
Civil and Environmental Engineering
Land Use Planning and Surveying
Hazardous and Solid Waste Consultants
WWW.SITEC-ENGINEERING.COM
789 Pelham Street, Unit C
Pelham, NH 03076
PHONE (781) 319-0100
FAX (781) 834-4783

File No. SE14-1036

project: "BROOKPOINT" MIXED-USE PROJECT
4 - 48 COMMERCIAL STREET
WEYMOUTH, MASSACHUSETTS

client: GND REALTY TRUST
61 SCOTTOWN PIERCE ROAD
LEXINGTON MA 02420

drawing title: SITE DETAILS

scale: N.T.S.
date: JAN. 25, 2017
drawn: JDO
checked: JAC
approved: JAC
drawing number: C-11

No.	Date	Chkd.	Aprvd.

COMMONWEALTH OF MASSACHUSETTS
JEFFREY A. COUTURE
CIVIL
No. 47084
REGISTERED PROFESSIONAL ENGINEER