Transportation Impact Assessment

Proposed Mixed-Use Commercial Development
505 Pond Street (Route 58)
Weymouth, Massachusetts

Prepared for:

Pond Street Acquisitions, LLC
Jamaica Plain, Massachusetts

April 2023

Prepared by:

Vanasse & Associates inc
Transportation Engineers & Planners

35 New England Business Center Drive
Suite 140
Andover, MA 01810

Vanasse & Associates inc
Transportation Engineers & Planners

35 New England Business Center Drive
Suite 140
Andover, MA 01810

Dear Reviewer:

This letter shall certify that this *Transportation Impact Assessment* has been prepared under my direct supervision and responsible charge. I am a Registered Professional Engineer (P.E.) in the Commonwealth of Massachusetts (Massachusetts P.E. No. 38871, Civil) and hold Certification as a Professional Traffic Operations Engineer (PTOE) from the Transportation Professional Certification Board, Inc. (TPCB), an affiliate of the Institute of Transportation Engineers (ITE) (PTOE Certificate No. 993). I am also a Fellow of the Institute of Transportation Engineers (FITE).

Sincerely,

VANASSE & ASSOCIATES, INC.

Jeffrey S. Dirk

Jeffrey S. Dirk, P.E., PTOE, FITE
Managing Partner

CONTENTS

EXECUTIVE SUMMARY 1

INTRODUCTION 6

Project Description 6
Study Methodology 7

EXISTING CONDITIONS 8

Roadways 8
Intersections 9
Existing Traffic Volumes 10
Spot Speed Measurements 12
Pedestrian and Bicycle Facilities 13
Public Transportation 13
Motor Vehicle Crash Data 13

FUTURE CONDITIONS 16

Future Traffic Growth 16
Project-Generated Traffic 18
Trip Distribution and Assignment 21
Future Traffic Volumes – Build Condition 22

TRAFFIC OPERATIONS ANALYSIS 23

Methodology 23
Analysis Results 26

CONTENTS (Continued)

DRIVE-THROUGH FACILITY QUEUING ANALYSIS 32

SIGHT DISTANCE EVALUATION 34

CONCLUSIONS AND RECOMMENDATIONS 36

Conclusions 36
Recommendations 37

FIGURES

No.	Title
1	Site Location Map
2	Existing Intersection Lane Use, Travel Lane Width and Pedestrian Facilities
3	2022 Existing Weekday Morning Peak-Hour Traffic Volumes
4	2022 Existing Weekday Evening Peak-Hour Traffic Volumes
5	2022 Existing Saturday Midday Peak-Hour Traffic Volumes
6	2030 No-Build Weekday Morning Peak-Hour Traffic Volumes
7	2030 No-Build Weekday Evening Peak-Hour Traffic Volumes
8	2030 No-Build Saturday Midday Peak-Hour Traffic Volumes
9	Trip-Distribution Map
10	Project-Generated Weekday Morning Peak-Hour Traffic Volumes
11	Project-Generated Weekday Evening Peak-Hour Traffic Volumes
12	Project-Generated Saturday Midday Peak-Hour Traffic Volumes
13	2030 Build Weekday Morning Peak-Hour Traffic Volumes
14	2030 Build Weekday Evening Peak-Hour Traffic Volumes
15	2030 Build Saturday Midday Peak-Hour Traffic Volumes
16	Conceptual Improvement Plan – Main Street (Route 18) at Pond Street (Route 58), Weymouth MA

TABLES

No.	Title
1	Study Area Intersection Description
2	2022 Existing Traffic Volumes
3	Vehicle Travel Speed Measurements
4	Motor Vehicle Crash Data Summary
5	Trip-Generation Summary
6	Traffic Volume Comparison
7	Peak-Hour Traffic Volume Increases
8	Level-of-Service Criteria for Signalized Intersections
9	Level-of-Service Criteria for Unsignalized Intersections
10	Signalized Intersection Level-of-Service and Vehicle Queue Summary
11	Unsignalized Intersection Level-of-Service and Vehicle Queue Summary
12	Drive-Through Window Vehicle Queue Observations
13	Sight Distance Measurements
14	Mitigated Signalized Intersection Level-of-Service and Vehicle Queue Summary

EXECUTIVE SUMMARY

Vanasse & Associates, Inc. (VAI) has conducted a Transportation Impact Assessment (TIA) in order to determine the potential impacts on the transportation infrastructure associated with the proposed construction of a mixed-use commercial development to be located at 505 Pond Street (Route 58) in Weymouth, Massachusetts (hereafter referred to as the "Project"). This assessment was prepared in consultation with the Town of Weymouth and the Massachusetts Department of Transportation (MassDOT), and was performed in accordance with MassDOT's *Transportation Impact Assessment (TIA) Guidelines* and the standards of the Traffic Engineering and Transportation Planning professions for the preparation of such reports.

Based on this assessment, we have concluded the following with respect to the Project:

1. Using trip-generation statistics published by the Institute of Transportation Engineers (ITE)[1] and with adjustment to account for internal trips and pass-by trips, the Project is expected to generate approximately 1,190 new vehicle trips on an average weekday (two-way volume over the operational day of the Project), with 131 new vehicle trips expected during the weekday morning peak-hour, 88 new vehicle trips expected during the weekday evening peak-hour and 200 new vehicle trips expected during the Saturday midday peak-hour;

2. In comparison to the former use that occupied the Project site (Factory Paint & Decorating), the Project is expected to result in 1,646 additional vehicle trips on an average weekday (two-way volume over the operational day of the Project <u>inclusive</u> of pass-by trips), with 195 additional vehicle trips expected during the weekday morning peak-hour, 42 additional vehicle trips expected during the weekday evening peak-hour and 268 additional vehicle trips expected during the Saturday midday peak-hour;

3. The Project will not have a significant impact (increase) on motorist delays or vehicle queuing over Existing or anticipated future conditions without the Project (No-Build conditions), acknowledging that one or move movements at the study area intersections are currently or are predicted to operate at or over capacity (i.e., level-of-service (LOS) "E" or "F") independent of the Project;

[1] *Trip Generation*, 11th Edition; Institute of Transportation Engineers; Washington, DC; 2021.

4. All movements exiting the Project site driveway to Pond Street were shown to operate at LOS C or better during the peak periods with minimal (up to one (1) vehicle) vehicle queuing assuming that "DO NOT BLOCK INTERSECTION" (R10-7) signs and pavement markings are install on the Pond Street eastbound approach to the Main Street/Pond Street intersection at the Project site driveway. That being said, actual delays and vehicle queuing for motorists exiting the Project site onto Pond Street will be directly related to vehicle queuing along Pond Street approaching Main Street;

5. All movements exiting the Project site driveway to Main Street were shown to operate at LOS C or better during the peak hours, with vehicle queuing of up to one (1) vehicle which can be accommodated within the Project site without inhibiting the movement of vehicles, pedestrians, or bicyclists along Main Street.

6. The drive-through window facilities are appropriately designed to accommodate the predicted maximum vehicle queue without impeding access, circulation or the movement of vehicles, pedestrians or bicyclists;

7. No apparent safety deficiencies were noted with respect to the motor vehicle crash history at the study area intersections; and

8. Lines of sight to and from the Project site driveway intersections with Main Street and Pond Street were found to exceed the required minimum distance for the intersections to function in a safe manner.

In consideration of the above, we have concluded that the Project can be accommodated within the confines of the existing transportation infrastructure in a safe and efficient manner with the implementation of the recommendations that follow.

RECOMMENDATIONS

A detailed transportation improvement program has been developed that is designed to provide safe and efficient access to the Project site and address any deficiencies identified at off-site locations evaluated in conjunction with this study. The improvements that have been recommended as a part of this evaluation and, where applicable, will be completed in conjunction with the Project subject to receipt of all necessary rights, permits, and approvals.

Project Access

Access to the Project site will continue to be provided by way of two (2) driveways that will intersect the south side of Pond Street approximately 90 feet west of Main Street and the west side of Main Street approximately 210 feet south of Pond Street, respectively (the approximate location of the existing driveways that serve the Project site). The Pond Street driveway will accommodate right-turn entering traffic and both left and right turns exiting; left-turn entering movements will be prohibited. The Main Street driveway will accommodate left and right-turn entering movements and right-turn exiting movements; left-turn exit movements will be prohibited. The following recommendations are offered with respect to Project access and internal circulation:

- The Pond Street Project site driveway should be a minimum of 24-feet in width and support the turning and maneuvering requirements of delivery trucks and the largest anticipated responding emergency vehicle as defined by the Weymouth Fire Department. "No Left

Turn" signs should be installed facing westbound Pond Street motorists along the north and south sides of Pond Street at the driveway.

- In conjunction with the Project , the existing raised island along the Main Street south leg to Pond Street will be extended south and will include an opening to allow vehicles to turn left from Main Street into the Project site and prohibit left-turn exiting movements. In addition, a raised island will be installed in the center of the driveway to channelize exiting traffic and reinforce the left-turn restriction. The travel lanes on either side of the island should be a minimum of 20 feet in width unless a reduced width is approved by the Weymouth Fire Department.

- "DO NOT BLOCK INTERSECTION" (R10-7) signs and pavement markings should be installed on the Pond Street eastbound approach to the Main Street/Pond Street intersection at (opposite) the Project site driveway in order to facilitate left-turn movements exiting the to the Project site when vehicle queues are present on the Pond Street eastbound approach to Main Street.

- Vehicles exiting the Project should be placed under STOP-sign control with marked STOP-line provided.

- Drive aisles within the Project site should be a minimum of 23-feet in width where perpendicular parking is proposed in order to allow for vehicle maneuvering.

- Appropriate signs ("One-Way" and "Do Not Enter") and pavement markings should be provided to regulate and reinforce the one-way traffic flow through the drive-through facilities and along the adjacent travel (by-pass) lane.

- Vehicles exiting the drive-through window facilities should be placed under STOP-sign control with a marked STOP-line provided.

- All signs and pavement markings to be installed within the Project shall conform to the applicable standards of the *Manual on Uniform Traffic Control Devices* (MUTCD).[2]

- Marked crosswalks and Americans with Disabilities Act (ADA) compliant wheelchair ramps should be provided for crossing the Project site driveways and at pedestrian crossings within the Project site.

- Signs and landscaping to be installed as a part of the Project within intersection sight triangle areas should be designed and maintained so as not to restrict lines of sight.

- Snow accumulations (windrows) within sight triangle areas shall be promptly removed where such accumulations would impede sight lines.

[2] *Manual on Uniform Traffic Control Devices (MUTCD)*; Federal Highway Administration; Washington, D.C.; 2009.

Off-Site

Main Street/Trotter Road and Main Street/Pond Street

Independent of the Project, specific movements at the Main Street/Trotter Road and the Main Street/Pond Street intersections are currently or are predicted to operate at or over capacity (i.e., LOS "E" or "F", respectively) during the peak hours. In an effort to off-set the predicted impact of the Project and to reduce motorist delays and vehicle queuing, the Project proponent will design and implement an optimal traffic signal timing, phasing and coordination plan for the Main Street/Trotter Road and the Main Street/Pond Street intersections. These improvements will be completed prior to the issuance of a Certificate of Occupancy for the Project, subject to receipt of all necessary rights, permits, and approvals, with a subsequent review of traffic operations at the intersections and further adjustment of the traffic signal timing, phasing and coordination as necessary within 6-months of the completion of the Project. With implementation of these improvements, overall intersection operations will be improved to LOS D or better with reduced vehicle queuing.

Transportation Demand Management

Public transportation services are provided within the study area by the Massachusetts Bay Transportation Authority (MBTA). The MBTA provides Commuter Rail service to the area from South Weymouth Station on the Kingston/Plymouth Commuter Rail Line, which provides service to South Station in Boston. South Weymouth Station is located to the north of the Project site at 89 Trotter Road (an approximate 5-minute walking distance). In addition, the MBTA also operates the RIDE paratransit service for eligible persons who cannot use fixed-route bus services all or some of the time due to a physical, cognitive, or mental disability in compliance with the Americans with Disabilities Act (ADA). In an effort to encourage the use of alternative modes of transportation to single-occupant vehicles, the following Transportation Demand Management (TDM) measures will be implemented as a part of the Project:

- A transportation coordinator will be assigned for the Project to coordinate the TDM program;
- Information regarding public transportation services, maps, schedules and fare information will be made available to employees of the project;
- A "welcome packet" will be provided to new employees detailing available public transportation services, bicycle and walking alternatives, and other commuter options;
- Tenants will be encouraged to offer specific amenities to discourage off-site trips, including providing a breakroom equipped with a microwave and refrigerator; offering direct deposit of paychecks; coordinating with a dry-cleaning service for on-site pick-up and delivery; allowing telecommuting or flexible work schedules; and other such measures to reduce overall traffic volumes and travel during peak traffic volume periods;
- Pedestrian accommodations have been incorporated within the Project site to encourage walking; and
- Secure bicycle parking will be provided at an appropriate location(s) within the Project site.

With implementation of the aforementioned recommendations, safe and efficient access will be provided to the Project site and the Project can be accommodated within the confines of the existing transportation system.

INTRODUCTION

Vanasse & Associates, Inc. (VAI) has conducted a Transportation Impact Assessment (TIA) in order to determine the potential impacts on the transportation infrastructure associated with the proposed construction of a mixed-use commercial development to be located at 505 Pond Street (Route 58) in Weymouth, Massachusetts (hereafter referred to as the "Project"). This study evaluates the following specific areas as they relate to the Project: i) access requirements; ii) potential off-site improvements; and iii) safety considerations; and identifies and analyzes existing traffic conditions and future traffic conditions, both with and without the Project, along Main Street (Route 18) and Pond Street (Route 58), and at the following specific intersections: Main Street at Trotter Road, Main Street at Pond Street, and Main Street at Jessica Lane.

PROJECT DESCRIPTION

As proposed, the Project will entail the construction of two (2) mixed-use commercial buildings to be located at 505 Pond Street in Weymouth, Massachusetts, that will encompass approximately 17,226± square feet (sf) of space. The buildings have been demised to accommodate the following prospective tenants/uses: a 2,400± sf Starbucks® coffee shop with a drive-through window facility; a 2,426± sf Chipotle Mexican Grill® restaurant with a drive-through window facility for mobile order customers only (Chipotlane®); a 1,700± sf fast casual restaurant; and 10,700± sf of general retail space.[3] The Project site is bounded by Pond Street and Nelson Road to the north; Jessica Lane to the south; Main Street to the east; and Nelson Road and residential properties to the west. Figure 1 depicts the Project site location in relation to the existing roadway network. The Project site currently contains a two-story block building and accompanying parking and supporting appurtenances that were formerly operated by Factory Paint & Decorating and closed to customers on September 28, 2019, all of which will be removed to accommodate the construction of the Project.

Access to the Project site will continue to be provided by way of two (2) driveways that will intersect the south side of Pond Street approximately 90 feet west of Main Street and the west side of Main Street approximately 210 feet south of Pond Street, respectively (the approximate location

[3]Since the preparation of this assessment, the gross floor areas of the uses within the Project site have been revised as follows: Starbucks® restaurant = 2,590± sf; Chipotle Mexican Grill® = 2,452± sf; fast casual restaurant = 1,700± sf; and general retail space = 10,462± sf; for a total of 17,204± sf. The refinements to the development program are not expected to result in a significant change to the traffic characteristics of the Project that would alter the findings of this assessment.

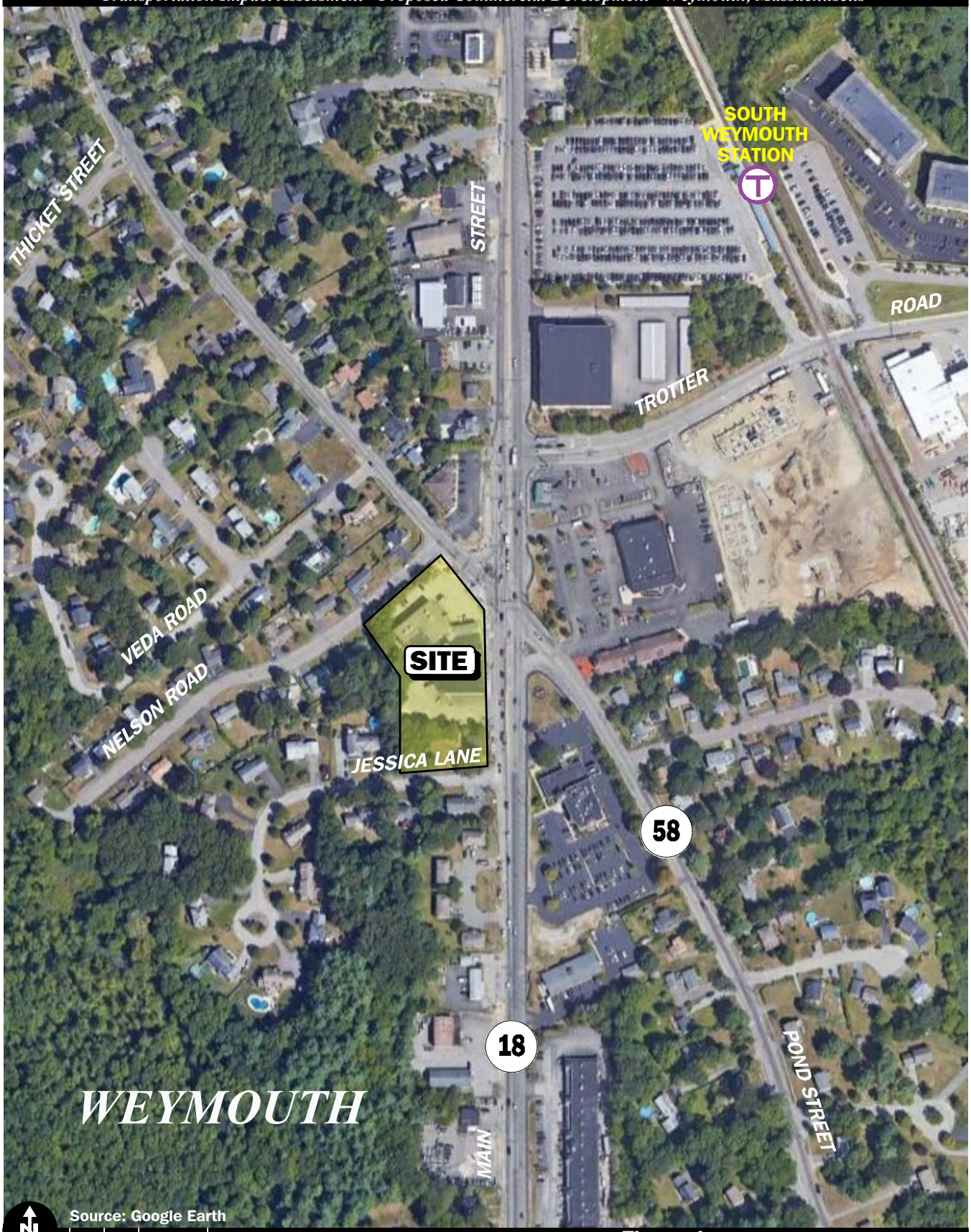

Source: Google Earth

Figure 1

Site Location Map

Vanasse & Associates inc

Copyright © 2022 by VAi. All Rights Reserved.

R:\8428\8428SLM2.dwg, Fri Jul 8 10:42:14 2022

of the existing driveways that serve the Project site). The Pond Street driveway will accommodate right-turn entering traffic and both left and right turns exiting; left-turn entering movements will be prohibited. The Main Street driveway will accommodate left and right-turn entering movements and right-turn exiting movements; left-turn exit movements will be prohibited. The Project will require the issuance of a State Highway Access Permit from the Massachusetts Department of Transportation (MassDOT) for access to Main Street (Route 18), a State Highway under the jurisdiction of MassDOT.

On-site parking will be provided for 112 vehicles to accommodate parking for employees and patrons. The proposed parking supply (112 parking spaces) exceeds the requirements of Section 120-74, *Minimum required spaces*, of the Town of Weymouth Zoning Bylaw for the proposed mix of uses.[4]

STUDY METHODOLOGY

This study was prepared in consultation with the Town of Weymouth and MassDOT; was performed in accordance with MassDOT's *Transportation Impact Assessment (TIA) Guidelines* and the standards of the Traffic Engineering and Transportation Planning professions for the preparation of such reports; and was conducted in three distinct stages.

The first stage involved an assessment of existing conditions in the study area and included an inventory of roadway geometrics; pedestrian and bicycle facilities; on-street parking; public transportation services; observations of traffic flow; and collection of pedestrian, bicycle and vehicle counts.

In the second stage of the study, future traffic conditions were projected and analyzed. Specific travel demand forecasts for the Project were assessed along with future traffic demands due to expected traffic growth independent of the Project. A seven-year time horizon from the date of publication of this assessment was selected for analyses consistent with MassDOT's *Transportation Impact Assessment (TIA) Guidelines*. The traffic analysis conducted in stage two identifies existing or projected future roadway capacity, traffic safety, and site access issues.

The third stage of the study presents and evaluates measures to address traffic and safety issues, if any, identified in stage two of the study.

[4]For retail and service establishments, the Zoning Bylaw requires a minimum of one (1) space for each 200 sf of gross floor area on the first floor of the building, or 86 parking spaces to support the proposed 17,226± sf commercial development.

EXISTING CONDITIONS

A comprehensive field inventory of existing conditions within the study area was conducted in November and December 2019, and updated in May 2022. The field investigation consisted of an inventory of existing roadway geometrics; pedestrian and bicycle facilities; public transportation services; traffic volumes; and operating characteristics; as well as posted speed limits and land use information within the study area. The study area that was assessed for the Project was selected to contain the major roadways providing access to the Project site, Main Street (Route 18) and Pond Street (Route 58), as well as the following specific intersections: Main Street at Trotter Road; Main Street at Pond Street; and Main Street at Jessica Lane.

The following describes the study area roadways and the intersections.

ROADWAYS

Main Street (Route 18)

- Four-lane urban principal arterial roadway under MassDOT jurisdiction;
- Traverses study area in a general north-south direction providing access to Route 3 to the north of the Project site;
- Provides four 11- to 12-foot-wide travel lanes (two lanes per direction) separated by a double-yellow centerline with variable width marked shoulders; and additional travel lanes are provided at major intersections;
- The posted speed limit is 40 miles per hour (mph);
- Sidewalks are provided along both sides of the roadway within the study area;
- Illumination is provided by way of streetlights mounted on wood poles; and
- Land use within the study area consists of the Project site, residential and commercial properties, and the Massachusetts Bay Transportation Authority (MBTA) South Weymouth commuter rail station.

Pond Street (Route 58)

- Two-lane roadway under Town jurisdiction that is classified as an urban collector roadway northwest of Main Street and as an urban minor arterial to the southeast;
- Traverses study area in a general northwest-southeast direction;
- Provides two 11 to 14-foot wide travel lanes separated by a double-yellow centerline with variable width marked shoulders and additional travel lanes are provided at major intersections;
- Posted speed limit is 30 mph;
- Sidewalks are provided along both sides of the roadway within the study area;
- Illumination is provided by way of streetlights mounted on wood poles; and
- Land use consists of the Project site and residential and commercial properties;

INTERSECTIONS

Table 1 and Figure 2 summarize existing lane use, traffic control, and pedestrian and bicycle accommodations at the study area intersections as observed in June 2022.

Table 1
STUDY AREA INTERSECTION DESCRIPTION

Intersection	Traffic Control Type[a]	No. of Travel Lanes Provided	Shoulder Provided? (Yes/No/Width)	Pedestrian Accommodations? (Yes/No/Description)	Bicycle Accommodations? (Yes/No/Description)
Main St./ Trotter Rd.	TS	2 general-purpose travel lanes on Main St. northbound approach; 1 left-turn lane and 2 through lanes on Main St. southbound approach; 1 left-turn and 1 right-turn lane on Trotter Rd.	Yes; 1 to 5-feet on Trotter Rd. and 5 feet on Main St. (bike lanes)	Yes; sidewalks along both sides of Main St. and north side of Trotter Rd.; crosswalks provided for crossing Main St. north leg. and Trotter Rd.; pedestrian traffic signal equipment and phasing (concurrent) provided	Yes; 5-foot bike lanes on Main St.; bicycle traffic signal equipment and detection system provided

See notes at end of table.

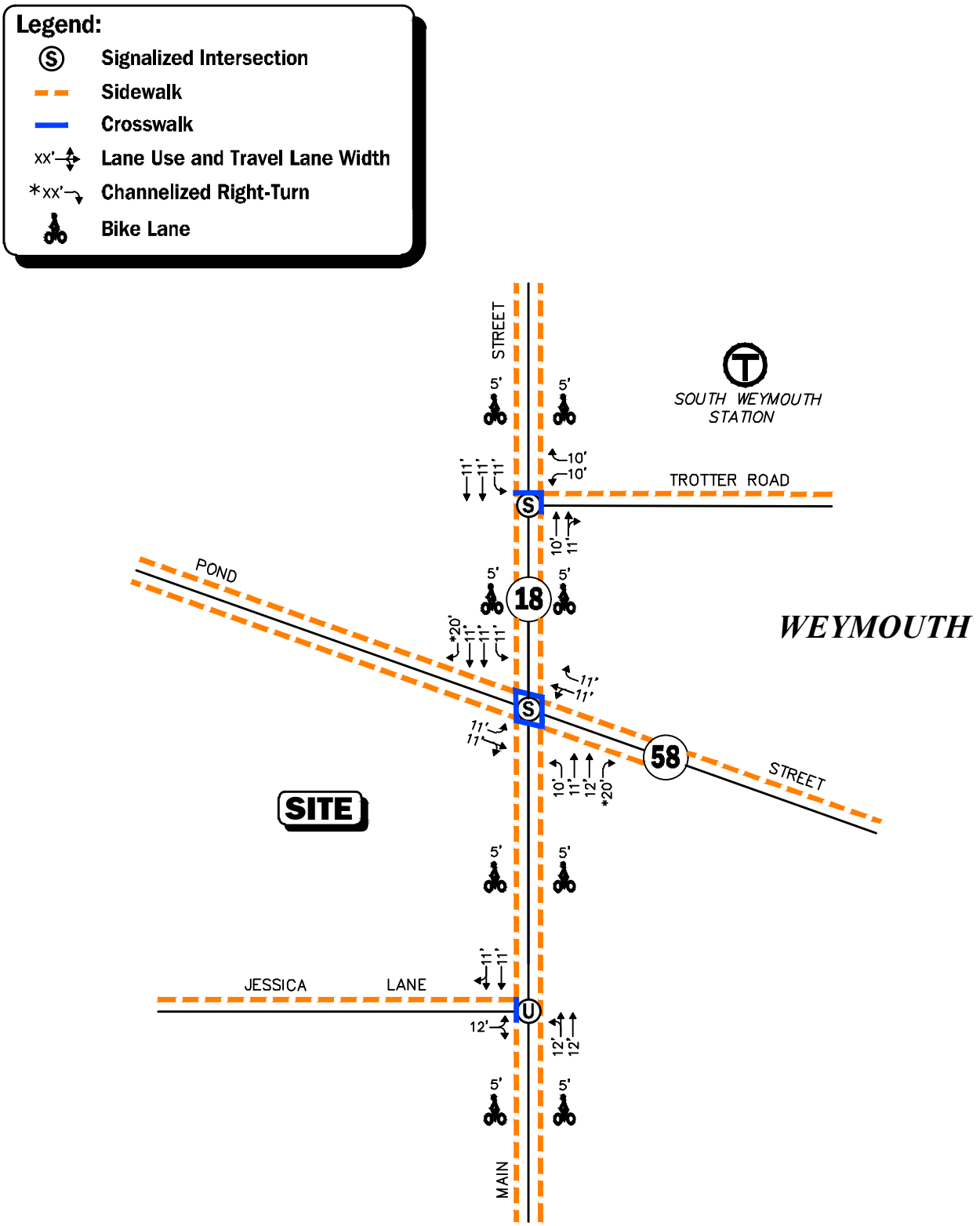

Not To Scale

Figure 2

Existing Intersection Lane Use, Travel Lane Width and Pedestrian Facilities

Vanasse & Associates inc

R:\8428\8428NT2_recover.dwg, 6/28/2022 9:36:31 AM

Copyright © 2022 by VAI. All Rights Reserved.

Table 1 (Continued)
STUDY AREA INTERSECTION DESCRIPTION

Intersection	Traffic Control Type[a]	No. of Travel Lanes Provided	Shoulder Provided? (Yes/No/Width)	Pedestrian Accommodations? (Yes/No/Description)	Bicycle Accommodations? (Yes/No/Description)
Main St./ Pond St.	TS	1 left-turn lane and 2 through lanes provided on both Main St. approaches with right-turn exiting prior to the intersection by way of channelized right-turn lanes; 1 left-turn lane and 1 through/right-turn lane on Pond St. eastbound approach; 1 left-turn/through lane and 1 right-turn lane on Pond St. westbound approach	Yes – 4 feet on Pond St. and 5-feet on Main St. (bike lanes)	Yes – Sidewalks along both sides of Pond St. and Main St.; crosswalks provided for crossing all legs and channelized right-turn lanes; pedestrian traffic signal equipment and phasing (exclusive and concurrent) provided	Yes; 5-foot bike lanes on Main St.; shared traveled-way[b] on Pond St.; bicycle detection system provided
Main St./ Jessica Ln.	S	2 general-purpose lanes on Main St. approaches; 1 general-purpose travel lane provided on Jessica Ln. approach	Yes –5-feet on Main St. (bike lanes)	Yes; sidewalks provided along both sides of Main St. and along the north side Jessica Ln.	Yes; 5-foot bike lanes on Main St.

[a]TS = traffic signal control; S = STOP-sign control.
[b]Combined shoulder and travel lane width equal to or exceed 14 feet.

EXISTING TRAFFIC VOLUMES

In order to determine existing traffic-volume demands and flow patterns within the study area, automatic traffic recorder (ATR) counts, turning movement counts (TMCs) and vehicle classification counts were completed in November 2019 and in May 2022 (Main Street/ Jessica Lane) while public schools were in regular session. The ATR counts were conducted on Main Street and Pond Street in the vicinity of the Project site on November 21st through 23rd, 2019, and on May 5th through 7th, 2022 (both time periods Thursday through Saturday, inclusive) in order to record weekday and Saturday daily traffic conditions over an extended period, with weekday morning (7:00 to 9:00 AM), weekday evening (4:00 to 6:00 PM), and Saturday midday (11:00 AM to 2:00 PM) peak period TMCs performed at the study intersections on Wednesday, November 21st, and Saturday, November 23rd, 2019, and on Thursday, May 5th and Saturday, May 7th, 2022. These time periods were selected for analysis purposes as they are representative of the peak traffic volume hours for both the Project and the adjacent roadway network.

Traffic Volume Adjustments

In order to evaluate the potential for seasonal fluctuation of traffic volumes within the study area, traffic volume data from MassDOT Continuous Count Station No. 6255 located on Route 3 north of Route 18 in Weymouth were reviewed.[5] Based on a review of this data, it was determined that traffic volumes for the month of May are approximately 4.0 percent above average month conditions, with traffic volumes during the month of November are approximately 2.5 percent below average month conditions. As such, the November traffic count data was adjusted upward by 2.5 percent in order to represent average-month conditions, with no adjustment required to the May traffic volumes as they are representative of above average conditions.

In order to account for the impact on traffic volumes and trip patterns resulting from the COVID-19 pandemic, the November 2019 and May 2022 ATR data collected on Main Street and Pond Street as a part of this assessment were adjusted to average-month conditions and then compared following the procedure outlined in the April 2020 "Guidance on Traffic Counting Data" published by MassDOT.[6] Based on this pre and post COVID-19 traffic-volume comparison, it was determined that the May 2022 traffic-volume data is comparable to the traffic volume conditions that existed prior to the COVID-19 pandemic and, as such, no adjustment was required to the May 2022 traffic volume data. MassDOT considers 2019 (pre-COVID 19) traffic volumes to be representative of "existing" conditions had the pandemic not occurred and, as such, the 2019 traffic volume data was considered to be representative of 2022 Existing conditions without adjustment.

The 2022 Existing traffic volumes are summarized in Table 2, with the weekday morning, weekday evening and Saturday midday peak-hour traffic volumes graphically depicted on Figures 3, 4 and 5, respectively. Note that the peak-hour traffic volumes presented in Table 2 were obtained from the aforementioned figures.

Table 2
2022 EXISTING TRAFFIC VOLUMES

Location/Peak Hour	AWT[a]	Saturday[b]	VPH[c]	K Factor[d]	Directional Distribution[e]
Main Street, in the vicinity of the Project Site:	20,570	19,750	--	--	--
Weekday Morning (7:15 – 8:15 AM)	--	--	1,530	7.4	60.6% NB
Weekday Evening (4:45 – 5:45 PM)	--	--	1,767	8.6	59.0% SB
Saturday Midday (12:30 – 1:30 PM)	--	--	1,797	9.1	51.0% SB
Pond Street, in the vicinity of the Project Site:	7,100	6,305	--	--	--
Weekday Morning (7:15 – 8:15 AM)	--	--	699	9.8	61.1% WB
Weekday Evening (4:30 – 5:30 PM)	--	--	751	10.6	60.9% EB
Saturday Midday (12:30 – 1:30 PM)	--	--	679	10.8	50.8% WB

[a]Average weekday traffic in vehicles per day.
[b]Average Saturday traffic in vehicles per day.
[c]Vehicles per hour.
[d]Percent of daily traffic occurring during the peak hour.
[e]Percent traveling in peak direction.
NB = northbound; SB = southbound; EB = eastbound; WB = westbound.

[5]MassDOT Traffic Volumes for the Commonwealth of Massachusetts; 2022.
[6]*Guidance on Traffic Count Data*; MassDOT; revised April 2020.

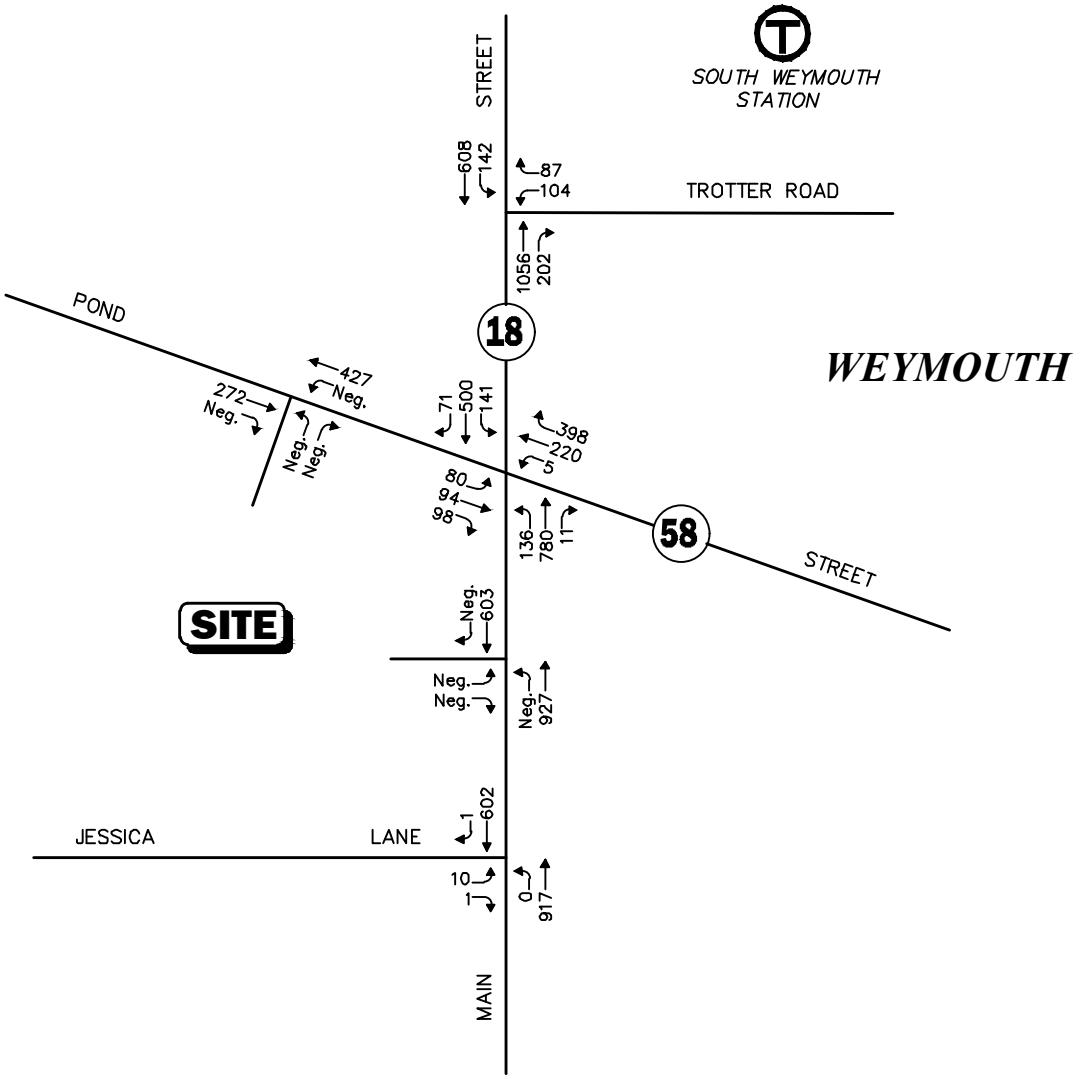

Not To Scale

Figure 3

2022 Existing Weekday Morning Peak-Hour Traffic Volumes

Vanasse & Associates inc

R:\8428\8428NT2.dwg, 6/28/2022 12:58:12 PM

Copyright © 2022 by VAI. All Rights Reserved.

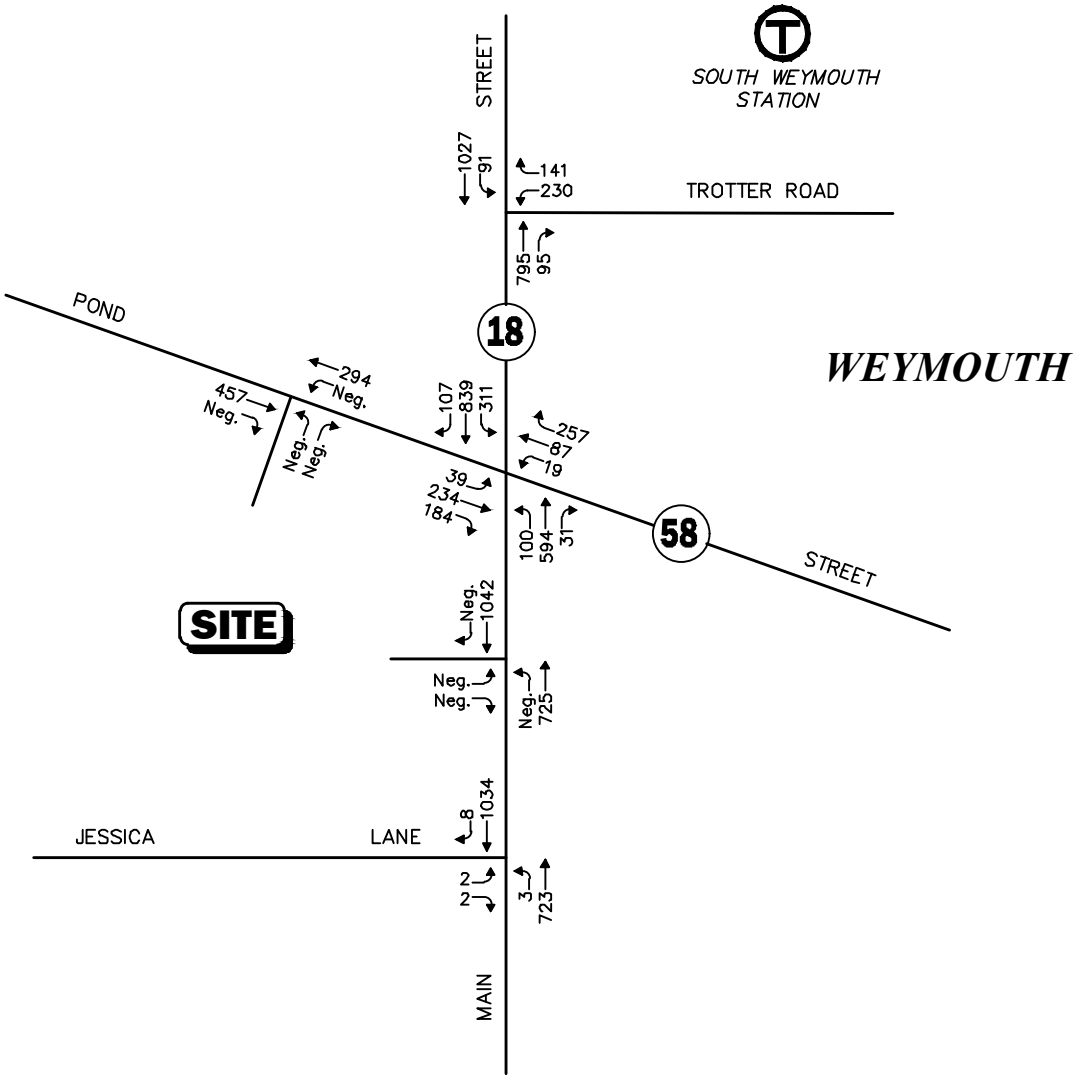

Not To Scale

Figure 4

2022 Existing Weekday Evening Peak-Hour Traffic Volumes

Vanasse & Associates inc

R:\8428\8428NT2.dwg, 6/28/2022 12:59:03 PM

Copyright © 2022 by VAI. All Rights Reserved.

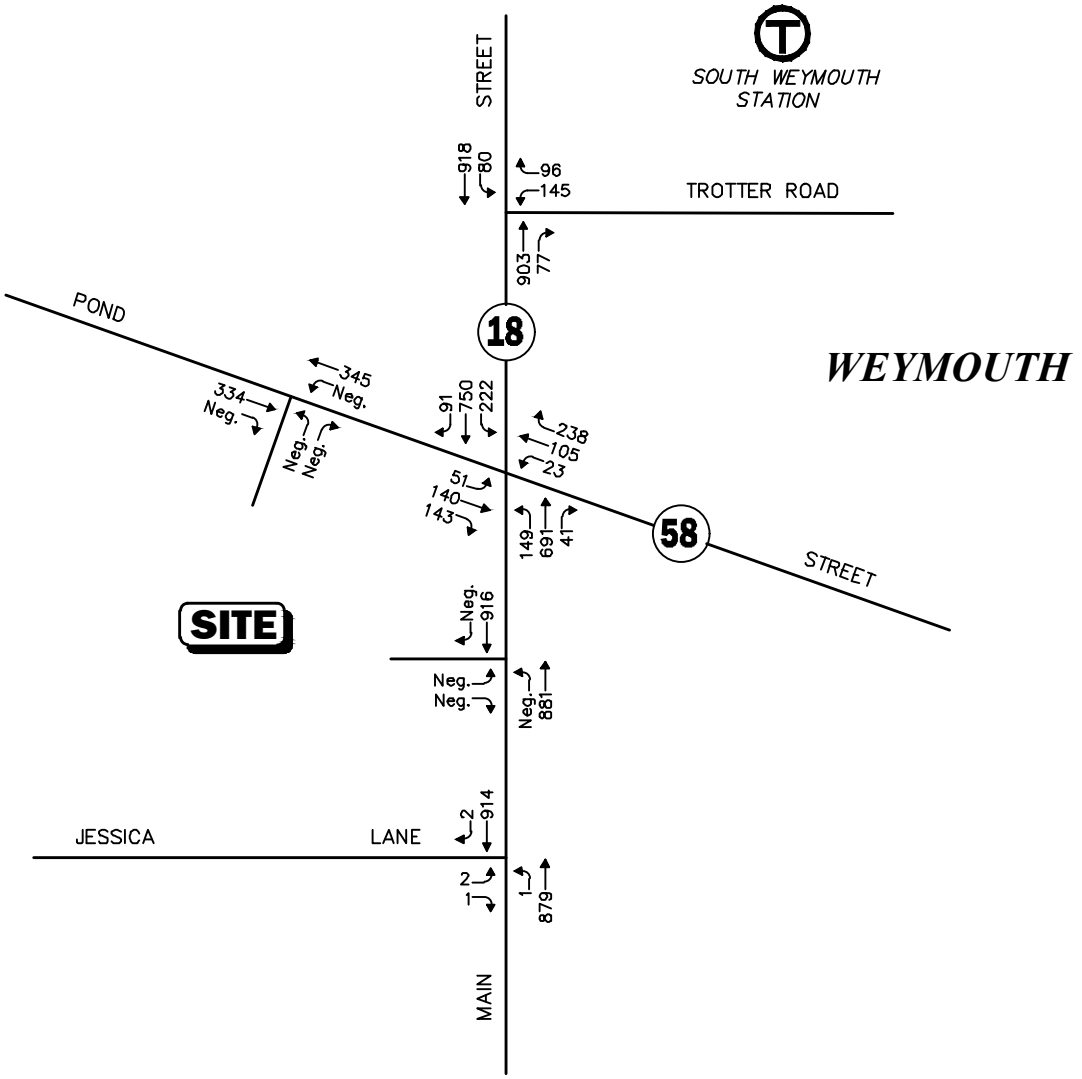

Not To Scale

Figure 5

2022 Existing Saturday Midday Peak-Hour Traffic Volumes

Vanasse & Associates inc

R:\8428\8428NT2.dwg, 6/28/2022 1:00:17 PM

Copyright © 2022 by VAI. All Rights Reserved.

As can be seen in Table 2, Main Street in the vicinity of the Project site was found to accommodate 20,570 vehicles on an average weekday and 19,750 vehicles on a Saturday (both two-way, 24-hour volumes), with approximately 1,530 vehicles per hour (vph) during the weekday morning peak-hour, 1,767 vph during the weekday evening peak-hour and 1,797 vph during the Saturday midday peak-hour.

Pond Street in the vicinity of the Project site was found to accommodate approximately 7,100 vehicles on an average weekday and 6,305 vehicles on a Saturday (again, both two-way, 24-hour volumes), with approximately 699 vph during the weekday morning peak-hour, 751 vph during the weekday evening peak-hour, and 679 vph during the Saturday midday peak-hour.

SPOT SPEED MEASUREMENTS

Vehicle travel speed measurements were performed on Main Street and Pond Street in the vicinity of the Project site in conjunction with the ATR counts. Table 3 summarizes the vehicle travel speed measurements.

Table 3
VEHICLE TRAVEL SPEED MEASUREMENTS

	Main Street		Pond Street	
	Northbound	Southbound	Eastbound	Westbound
Mean Travel Speed (mph)	33	39	30	31
85th Percentile Speed (mph)	42	44	35	34
Posted Speed Limit (mph)	40	40	30	30

mph = miles per hour.

As can be seen in Table 3, the mean vehicle travel speed along Main Street within the study area was found to be approximately 33 mph in the northbound direction and 39 mph southbound. The measured 85th percentile vehicle travel speed, or the speed at which 85 percent of the observed vehicles traveled at or below, was found to be 42 mph in the northbound direction and 44 mph southbound, which is 2 to 4 mph above the posted speed limit (40 mph). The 85th percentile speed is used as the basis of engineering design and in the evaluation of sight distances, and is often used in establishing posted speed limits.

The mean vehicle travel speed along Pond Street within the study area was found to be approximately 30 mph in the eastbound direction and 31 mph westbound. The measured 85th percentile vehicle travel speed was found to be 35 mph in the eastbound direction and 34 mph westbound, which is 4 to 5 mph above the posted speed limit (30 mph).

PEDESTRIAN AND BICYCLE FACILITIES

A comprehensive field inventory of pedestrian and bicycle facilities within the study area was undertaken in May 2022. The field inventory consisted of a review of the location of sidewalks and pedestrian crossing locations along the study roadways and at the study intersections, as well as the location of existing and planned future bicycle facilities. As detailed on Figure 2, sidewalks are generally provided along one or both sides of the study area roadways, with marked crosswalks provided for crossing one or more legs of the study intersections and pedestrian traffic signal equipment and phasing provided for the crossings at the signalized intersections.

Within the study area, marked bicycle lanes are provided along Main Street and Pond Street generally provides sufficient width to accommodate bicycle travel in a shared traveled-way configuration (i.e., bicyclists and motor vehicles sharing the traveled-way).[7]

PUBLIC TRANSPORTATION

Public transportation services are provided within the study area by the Massachusetts Bay Transportation Authority (MBTA). The MBTA provides Commuter Rail service to the area from South Weymouth Station on the Kingston/Plymouth Commuter Rail Line, which provides service to South Station in Boston. South Weymouth Station is located to the north of the Project site at 89 Trotter Road (an approximate 5-minute walking distance). In addition, the MBTA also operates the RIDE paratransit service for eligible persons who cannot use fixed-route bus services all or some of the time due to a physical, cognitive, or mental disability in compliance with the Americans with Disabilities Act (ADA).

The public transportation schedules and fare information is provided in the Appendix.

MOTOR VEHICLE CRASH DATA

Motor vehicle crash information for the study area intersections was provided by the MassDOT Highway Division Safety Management/Traffic Operations Unit for the most recent five-year period available (2016 through 2020, inclusive) in order to examine motor vehicle crash trends occurring within the study area. The data is summarized by intersection, type, severity, roadway and weather conditions, and day of occurrence, and presented in Table 4.

[7]A minimum combined travel lane and paved shoulder width of 14-feet is required to support bicycle travel in a shared traveled-way condition.

Table 4
MOTOR VEHICLE CRASH DATA SUMMARY[a]

	Main Street/ Trotter Road	Main Street/ Pond Street	Main Street/ Jessica Lane	Main Street/ Project Site Driveway	Pond Street/ Project Site Driveway
Traffic Control Type:[b]	TS	TS	U	U	U
Year:					
2016	3	8	3	0	0
2017	3	9	0	1	2
2018	3	5	4	1	0
2019	5	7	1	3	2
2020	4	8	2	1	1
Total	18	37	10	6	5
Average	3.60	7.40	2.00	1.20	1.00
Rate[c]	0.37	0.65	0.28	0.17	0.33
MassDOT Crash Rate:[d]	0.78/0.71	0.78/0.71	0.57/0.52	0.57/0.52	0.57/0.52
Significant?[e]	No	No	No	No	No
Type:					
Angle	5	20	4	2	2
Rear-End	6	8	4	3	2
Head-On	0	3	0	0	1
Sideswipe	2	4	1	1	0
Fixed Object	4	2	1	0	0
Pedestrian/Bicycle	1	0	0	0	0
Unknown/Other	0	0	0	0	0
Total	18	37	10	6	5
Conditions:					
Clear	15	30	9	3	5
Cloudy	0	3	0	1	0
Rain	3	2	0	2	0
Snow/Ice	0	2	1	0	0
Total	18	37	10	6	5
Lighting:					
Daylight	10	25	9	2	5
Dawn/Dusk	2	3	0	1	0
Dark (Road Lit)	6	9	1	3	0
Dark (Road Unlit)	0	0	0	0	0
Total	18	37	10	6	5
Day of Week:					
Monday through Friday	14	25	7	4	3
Saturday	2	7	3	1	2
Sunday	2	5	0	1	0
Total	18	37	10	6	5
Severity:					
Property Damage Only	17	31	8	5	4
Personal Injury	1	6	2	1	1
Fatality	0	0	0	0	0
Total	18	37	10	6	5

[a]Source: MassDOT Safety Management/Traffic Operations Unit records, 2016 through 2020.
[b]Traffic Control Type: U = unsignalized; TS = traffic signal.
[c]Crash rate per million vehicles entering the intersection.
[d]Statewide/District crash rate.
[e]The intersection crash rate is significant if it is found to exceed the MassDOT crash rate for the MassDOT Highway Division District in which the Project is located (District 6).

As can be seen in Table 4, the study area intersections were shown to have experienced an average of 7.40 or fewer reported motor vehicle crashes per year over the five-year review period and were found to have motor vehicle crash rates *below* both the MassDOT statewide and District averages for a signalized or unsignalized intersection, as appropriate, for the MassDOT Highway Division District in which the intersections are located (District 6). The majority of the reported crashes occurred on a weekday; under clear weather conditions; during daylight; and involved angle-type collisions that resulted in property damage only.

A Road Safety Audit (RSA) was conducted in 2011 along the Route 18 corridor that included the Main Street/Pond Street intersection[8] and provided safety observations that formed the basis of the recently completed improvements at the intersection that were advanced by MassDOT as a part of the in the Route 18 Widening Project *(discussion follows).*

A review of the MassDOT statewide High Crash Location List indicated that there are no locations within the study area that are included on MassDOT's Highway Safety Improvement Program (HSIP) listing as a high crash location. In addition, no (0) crashes were reported within the study area over the five-year review period that resulted in a fatality.

The detailed MassDOT Crash Rate Worksheets are provided in the Appendix.

[8] *Road Safety Audit*, Main Street (Route 18) at Various Locations, Town of Weymouth; Howard/Stein-Hudson Associates; June 2011.

FUTURE CONDITIONS

Traffic volumes in the study area were projected to the year 2030, which reflects a seven-year planning horizon from the date of publication of this assessment consistent with MassDOT's *Transportation Impact Assessment (TIA) Guidelines*. Independent of the Project, traffic volumes on the roadway network in the year 2030 under No-Build conditions include all existing traffic and new traffic resulting from background traffic growth. Anticipated Project-generated traffic volumes superimposed upon the 2030 No-Build traffic volumes reflect 2030 Build traffic volume conditions with the Project.

FUTURE TRAFFIC GROWTH

Future traffic growth is a function of the expected land development in the immediate area and the surrounding region. Several methods can be used to estimate this growth. A procedure frequently employed estimates an annual percentage increase in traffic growth and applies that percentage to all traffic volumes under study. The drawback to such a procedure is that some turning volumes may actually grow at either a higher or a lower rate at particular intersections.

An alternative procedure identifies the location and type of planned development, estimates the traffic to be generated, and assigns it to the area roadway network. This procedure produces a more realistic estimate of growth for local traffic; however, potential population growth and development external to the study area would not be accounted for in the resulting traffic projections.

To provide a conservative analysis framework, both procedures were used, the salient components of which are described below.

Specific Development by Others

The Town of Weymouth Department of Planning and Community Development was contacted in order to determine if there were any projects planned within the study area that would have an impact on future traffic volumes at the study intersections. Based on this discussion, the following projects were identified for inclusion in this assessment:

- ***Union Point (Southfield), Abington, Rockland and Weymouth, Massachusetts.*** This project consists of the phased redevelopment of the former South Weymouth Naval Air Station in Abington, Rockland and Weymouth to accommodate a mixed-use development

to be known as Union Point (formerly Southfield). When complete, Union Point is expected to encompass 8 million ± sf of commercial space and 3,855 residential units. Phase 1 of the project is expected to be complete within the seven-year planning horizon of this assessment (2030) and will include 2,855 residential units and 2.06 million ± sf of commercial space.

- ***Colony Station, 1400 Main Street, Weymouth, Massachusetts.*** This project consists of a 153-unit residential apartment community with 7,000± sf of accessory retail space located at 1400 Main Street. At the time that the traffic counts that form the basis of this assessment were competed (2019), this project was under construction and has since been completed and is occupied.

- ***Residential Development, 1500 Main Street, Weymouth, Massachusetts.*** This project consists of a 237-unit residential apartment community with 6,121± sf of accessory retail space located at 1500 Main Street. At the time that the traffic counts that form the basis of this assessment were competed (2019), this project was under construction and has since been completed and is occupied.

- ***Proposed Residential Development, Main Street, Weymouth, Massachusetts.*** This proposed project will entail the construction of a 20-unit residential apartment community to be located off Main Street north of the Project site. The status of this project is not known; however, the project is not expected to result in a significant increase in traffic within the study area.

- ***Proposed Congregate Care Facility, 1431 – 1449 Main Street, Weymouth, Massachusetts.*** This project entails the construction of a congregate care facility that will include 94 independent living units, 45 assisted living units, and 26 memory care units to be located at 1431 – 1449 Main Street to the north of the Project site. Based on a review of the Traffic Assessment that was prepared for the project, the redevelopment will result in a reduction in traffic.[9] In order to provide conservative (high) traffic volumes from which to assess the potential impact of the Project, no adjustment (reduction) was made to the future baseline traffic volumes to account for this project.

With the exception of the proposed congregate care facility, traffic volumes associated with the aforementioned development projects by others were either estimated using trip-generation statistics published by the Institute of Transportation Engineers (ITE)[10] for the appropriate land uses or were obtained from the traffic study conducted for the specific development, and were assigned onto the study area roadway network based on existing traffic patterns where no other information was available. No other developments were identified at this time that are expected to result in an increase in traffic within the study area beyond the general background traffic growth rate.

General Background Traffic Growth

Traffic-volume data compiled by MassDOT from Continuous Count Station No. 6255 located on Route 3 north of Route 18 in Weymouth were reviewed. Based on a review of this data and discussions with the Town of Weymouth Department of Planning and Community Development,

---

[9] *Traffic Assessment*, Proposed Congregate Care Facility, Weymouth, Massachusetts; Ron Müller & Associates; November 2020.

[10] Ibid 1.

a 1.0 percent per year compounded annual background traffic growth rate was used in order to account for future traffic growth and presently unforeseen development within the study area.

Roadway Improvement Projects

MassDOT and the Town of Weymouth were consulted in order to determine if there were any planned future roadway improvement projects expected to be complete by 2030 within the study area. Based on these discussions, the following roadway improvement project was identified within the study area:

- ***Route 18 Widening Project, Abington and Weymouth (MassDOT Project No. 601630).*** This project is being undertaken by MassDOT and entails the widening of Route 18 from two (2) to four (4) lanes; traffic signal reconstruction and upgrades; replacement of the MBTA commuter rail bridge over Route 18; installation of sidewalks and bicycle lanes along both sides of the roadway; and associated roadway rehabilitation, drainage improvements, sign and pavement marking installation, and pedestrian and bicycle accommodation improvements. Construction along Route 18 within the study area of this assessment is substantially complete.

No other roadway improvement projects aside from routine maintenance activities were identified to be planned within the study area at this time.

No-Build Traffic Volumes

The 2030 No-Build condition peak-hour traffic-volumes were developed by applying the 1.0 percent per year compounded annual background traffic growth rate to the 2022 Existing peak-hour traffic volumes and then adding the peak-hour traffic volumes associated with the identified specific development projects by others. The resulting 2030 No-Build weekday morning, weekday evening and Saturday midday peak-hour traffic volumes are shown on Figures 6, 7 and 8, respectively.

PROJECT-GENERATED TRAFFIC

Design year (2030) Build traffic volumes for the study area roadways were determined by estimating Project-generated traffic volumes and assigning those volumes on the study roadways. The following sections describe the methodology used to develop the anticipated traffic characteristics of the Project.

As proposed, the Project will entail the construction of a 17,226± sf commercial development that will contain a mix of commercial uses. In order to develop the traffic characteristics of the Project, trip-generation statistics published by the ITE[11] for similar land uses to those that may be located with the Project site were used. ITE Land Use Codes (LUCs) 822, *Strip Retail Plaza (>40k)*; 930, *Fast Casual Restaurant*; and 937, *Coffee Shop with Drive-Through Window*; were used to establish the base traffic characteristics of the Project.

Internal Trips

A portion of the trips expected to be generated by the Project will consist of internal or dual-purpose trips. An internal trip consists of a customer and/or employee that patronizes more than one of the

[11]Ibid 1.

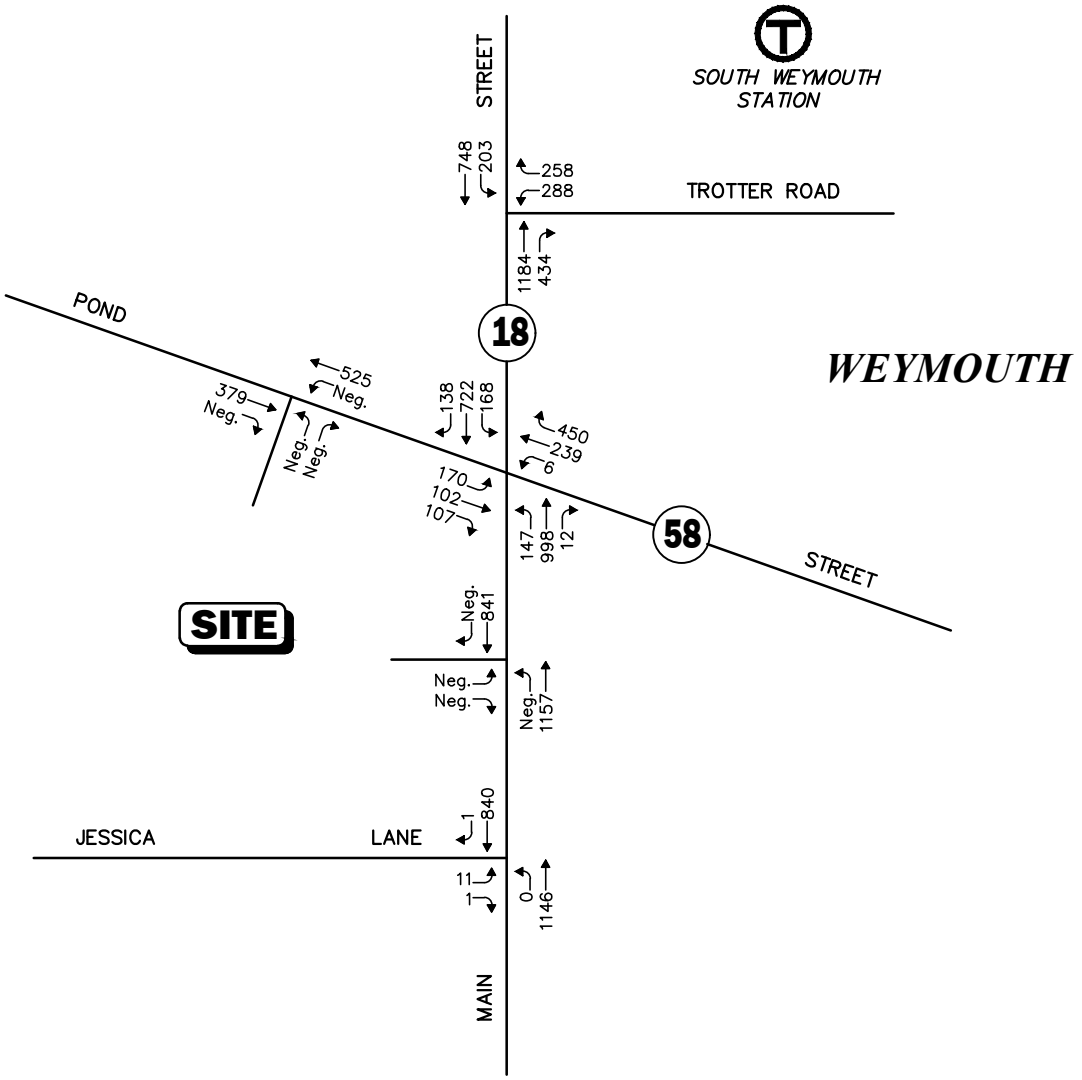

Not To Scale

Figure 6

2030 No-Build Weekday Morning Peak-Hour Traffic Volumes

Vanasse & Associates inc

R:\8428\8428NT2.dwg, 1/20/2023 3:03:16 PM

Copyright © 2022 by VAi. All Rights Reserved.

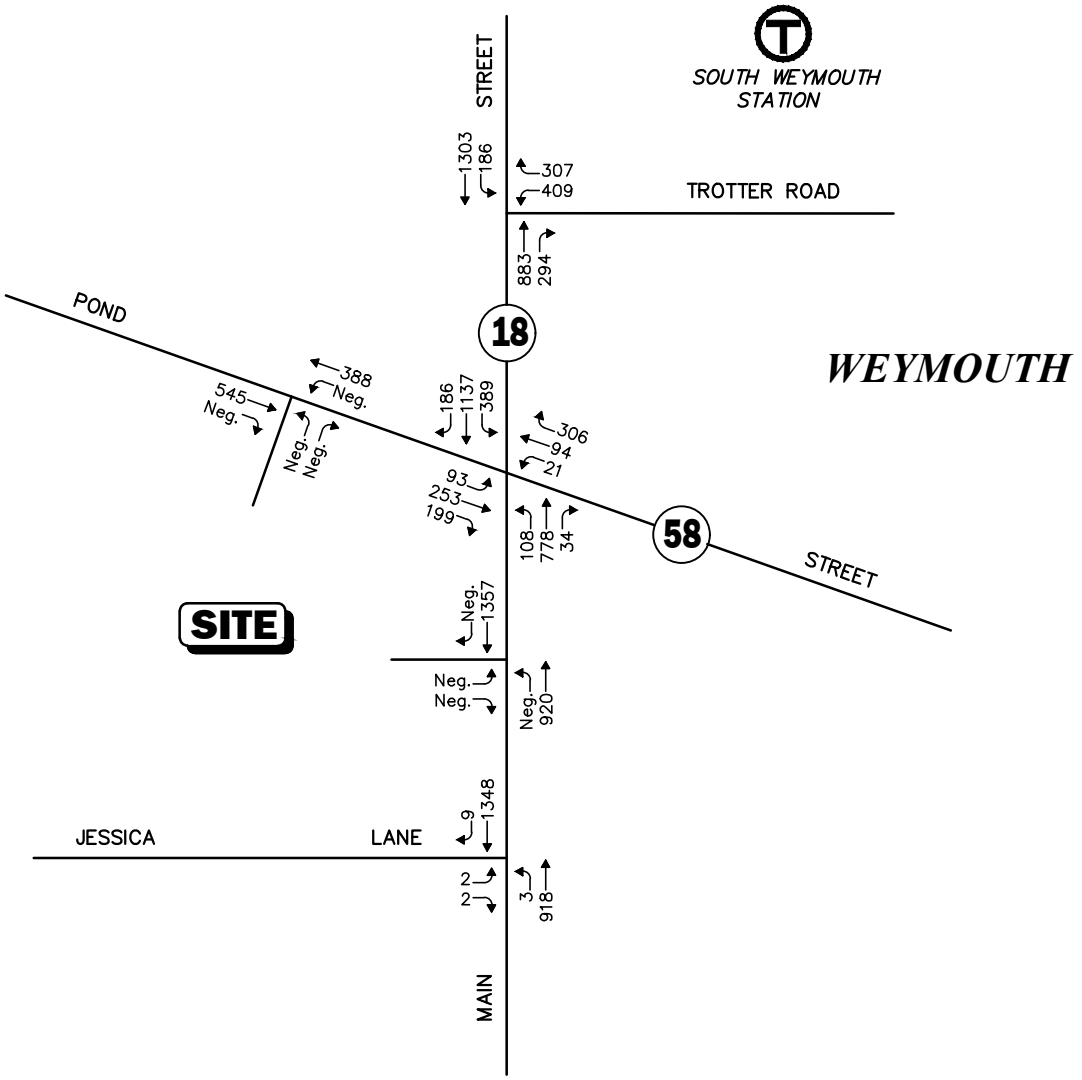

Not To Scale

Figure 7

2030 No-Build Weekday Evening Peak-Hour Traffic Volumes

Vanasse & Associates inc

R:\8428\8428NT2.dwg, 1/20/2023 3:03:26 PM

Copyright © 2022 by VAi. All Rights Reserved.

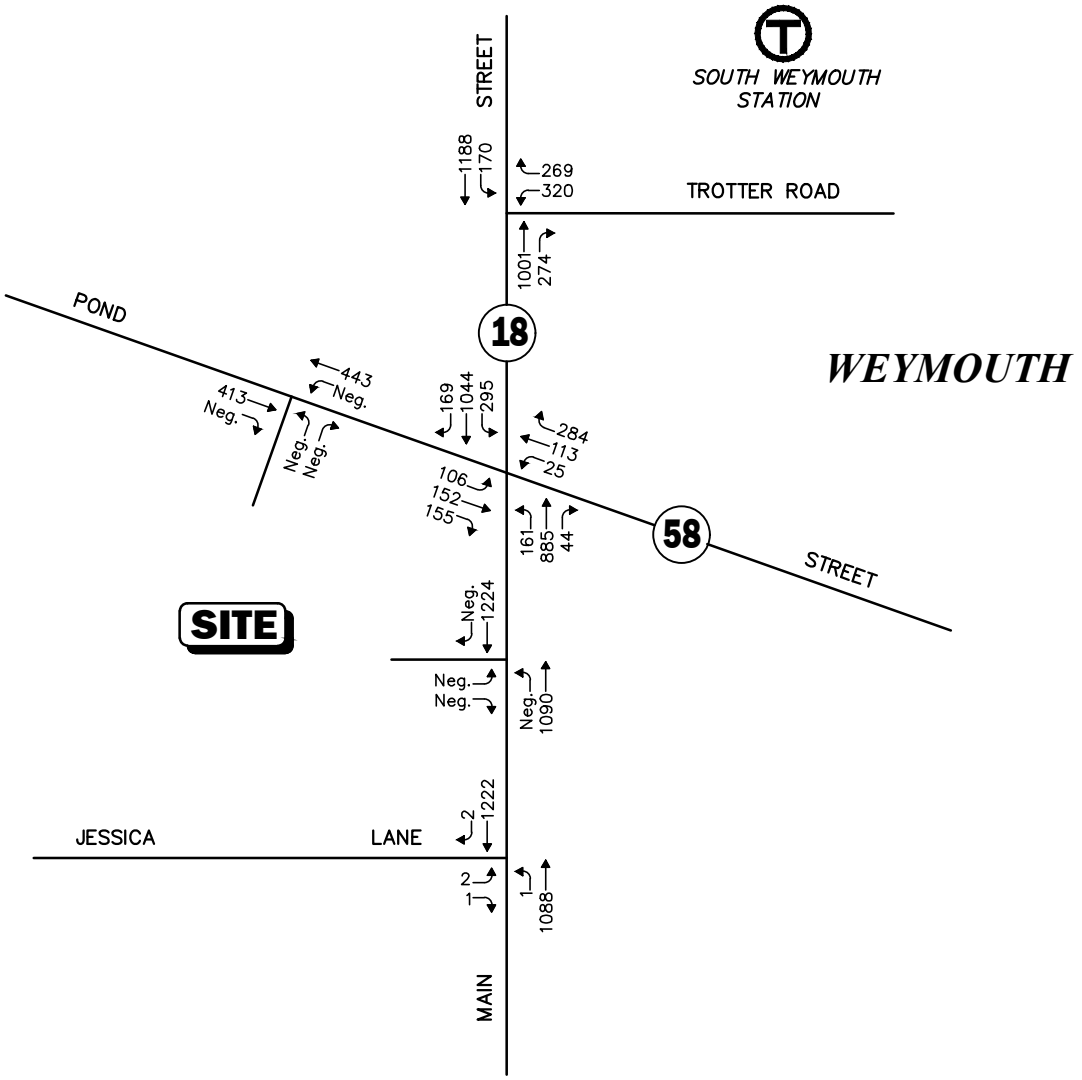

Not To Scale

Figure 8

2030 No-Build
Saturday Midday
Peak-Hour Traffic Volumes

Vanasse & Associates inc

R:\8428\8428NT2.dwg, 1/20/2023 3:03:34 PM

Copyright © 2022 by VAi. All Rights Reserved.

uses planned within a development and is common in mixed-use projects with appropriate accommodations to facilitate trips between uses. These "internal" trips are not accounted for when the trip-generation calculations are performed on an individual land use basis, resulting in higher traffic volumes for the overall Project than will actually be generated. In order to account for this interaction, the multi-use trip-generation calculation methodology was promulgated by the ITE[12] was applied to the base ITE trip-generation calculations.

Pass-By Trips

Not all of the trips expected to be generated by the Project will be new trips on the roadway network. A significant portion of these trips will consist of pass-by trips or vehicles already traveling along Main Street and Pond Street for other purposes that will patronize the Project in conjunction with their trip and then continue to their original destination. These trips are not new trips on the roadway network as a result of the Project. Statistics published by the ITE[13] indicate that an average of between 31 percent and 90 percent (coffee shop with drive-through window) of the trips generated by commercial uses similar to those that may be located within the Project site may consist of pass-by trips. In accordance with MassDOT guidelines which limits pass-by trips to the lesser of: i) 15 percent of the adjacent roadway traffic volume; or ii) the ITE pass-by trip rate for the specific use; the ITE published pass-by trips rates were applied to the base trip-generation calculations for each Project use. For the coffee shop use, the pass-by trip rate was confined (limited) to no more than 55 percent (consistent with the pass-by trip rate for a fast-food restaurant with drive-through window) in order to provide conservative (high) traffic volumes for this component of the Project.

Table 5 summarizes the anticipated trip characteristics of the Project using the aforementioned methodology.

Project-Generated Trip Summary

As can be seen in Table 5, using the aforementioned methodology, the Project is expected to generate approximately 1,190 new vehicle trips on an average weekday (two-way volume over the operational day of the Project, or 595 vehicles entering and 595 exiting), with 131 new vehicle trips (70 vehicles entering and 61 exiting) expected during the weekday morning peak-hour, 88 new vehicle trips (47 vehicles entering and 41 exiting) expected during the weekday evening peak-hour and 200 new vehicle trips (107 vehicles entering and 93 exiting) expected during the Saturday midday peak-hour.

[12]Ibid 1.

[13]*Trip Generation Handbook*, 3rd Edition, Institute of Transportation Engineers; Washington, DC; 2017.

Table 5
TRIP GENERATION SUMMARY

	Vehicle Trips																
	Coffee Shop Component					Restaurant Component					Retail Component						
Time Period/Direction	(A) Coffee Shop with Drive-Through (2,400 sf)[a]	(B) Internal Trips	(C = A-B) Net Trips	(D) Pass-By Trips[b]	(E = C-D) New Trips	(F) Fast Casual Restaurant (4,126 sf)[c]	(G) Internal Trips	(H = F-G) Net Trips	(I) Pass-By Trips[d]	(J = H-I) New Trips	(K) Retail Space (10,700 sf)[e]	(L) Internal Trips	(M = K-L) Net Trips	(N) Pass-By Trips[f]	(O = M-N) New Trips	**(P = D+I+N) Total Pass-By Trips**	**(Q = E+J+O) Total New Trips**
Average Weekday Daily:																	
Entering	641	56	585	292	293	201	17	184	46	138	292	73	219	55	164	**393**	**595**
Exiting	641	56	585	292	293	201	17	184	46	138	292	73	219	55	164	**393**	**595**
Total	1,282	112	1,170	584	586	402	34	368	92	276	584	146	438	110	328	**786**	**1,190**
Weekday Morning Peak Hour:																	
Entering	105	1	104	51	53	3	0	3	0	3	15	1	14	0	14	**51**	**70**
Exiting	101	1	100	51	49	3	0	3	0	3	10	1	9	0	9	**51**	**61**
Total	206	2	204	102	102	6	0	6	0	6	25	2	23	0	23	**102**	**131**
Weekday Evening Peak Hour:																	
Entering	47	10	37	20	17	29	6	23	8	15	41	16	25	10	15	**38**	**47**
Exiting	47	10	37	20	17	23	6	17	8	9	41	16	25	10	15	**38**	**41**
Total	94	20	74	40	34	52	12	40	16	24	82	32	50	20	30	**76**	**88**
Saturday Midday Peak Hour:																	
Entering	105	9	96	48	48	74	5	69	26	43	36	14	22	6	16	**80**	**107**
Exiting	106	9	97	48	49	61	5	56	26	30	34	14	20	6	14	**80**	**93**
Total	211	18	193	96	97	135	10	125	52	73	70	28	42	12	30	**160**	**200**

[a]Based on ITE LUC 937, *Coffee Shop with Drive-Through Window.*
[b]Pass-by trip rate obtained from ITE LUC 934, *Fast Foot Restaurant with Drive-Through Window*, and were applied as follows: average weekday, weekday morning, and Saturday midday = 50 percent; weekday evening = 55 percent.
[c]Based on ITE LUC 930, *Fast Casual Restaurant.*
[d]Pass-by trip rate obtained from ITE LUC 932, *High-Turnover (Sit-Down) Restaurant*, and were applied as follows: average weekday = 25 percent; weekday morning = 0 percent; weekday evening and Saturday midday = 43 percent.
[e]Based on ITE LUC 822, *Strip Retail Plaza (<40k).*
[f]Pass-by trip rate obtained from ITE LUC 821, *Shopping Plaza (40 – 150k)*, and were applied as follows: average weekday = 25 percent; weekday morning = 0 percent; weekday evening = 40 percent; Saturday midday = 31 percent.

Table 6 compares the traffic volumes associated with the Project to those of the former use that occupied the Project site (Factory Paint & Decorating store). Note that the traffic volumes for the Project include pass-by trips and represent the total volume of traffic that is produced by the Project as measured at the Project site driveways.

Table 6
TRAFFIC VOLUME COMPARISON

	Vehicle Trips		
Time Period/Direction	(A) Proposed Mixed-Use Commercial Development[a]	(B) Former Use (Factory Paint)[b]	(A-B) Difference
Average Weekday Daily:	1,976	330	+1,646
Weekday Morning Peak Hour:	233	38	+195
Weekday Evening Peak Hour:	164	122	+42
Saturday Midday Peak Hour:	360	92	+268

[a]Without a reduction for pass-by trips.
[b]Based on ITE LUC 816, *Hardware/Paint Store* (40,950 sf).

Traffic Volume Comparison

As can be seen in Table 6, in comparison to the former use, the Project is expected to generate approximately 1,646 additional vehicle trips on an average weekday (two-way volume over the operational day of the Project), with 195 additional vehicle trips expected during the weekday morning peak-hour, 42 additional vehicle trips expected during the weekday evening peak-hour and 268 additional vehicle trips expected during the Saturday midday peak-hour.

TRIP DISTRIBUTION AND ASSIGNMENT

The directional distribution of generated trips to and from the Project site was determined based on a review of the existing traffic patterns within the study area during the commuter peak periods. This methodology is consistent with the commercial nature of the corridor and is also reflective of the fact that a significant portion of the trips generated by the Project will be derived from the adjacent traffic stream (i.e., pass-by trips). The general trip distribution for the Project is graphically depicted on Figure 9. Traffic volumes expected to be generated by the Project were assigned onto the study area roadway network as shown on Figures 10, 11 and 12 for the weekday morning, weekday evening and Saturday midday peak-hours, respectively.

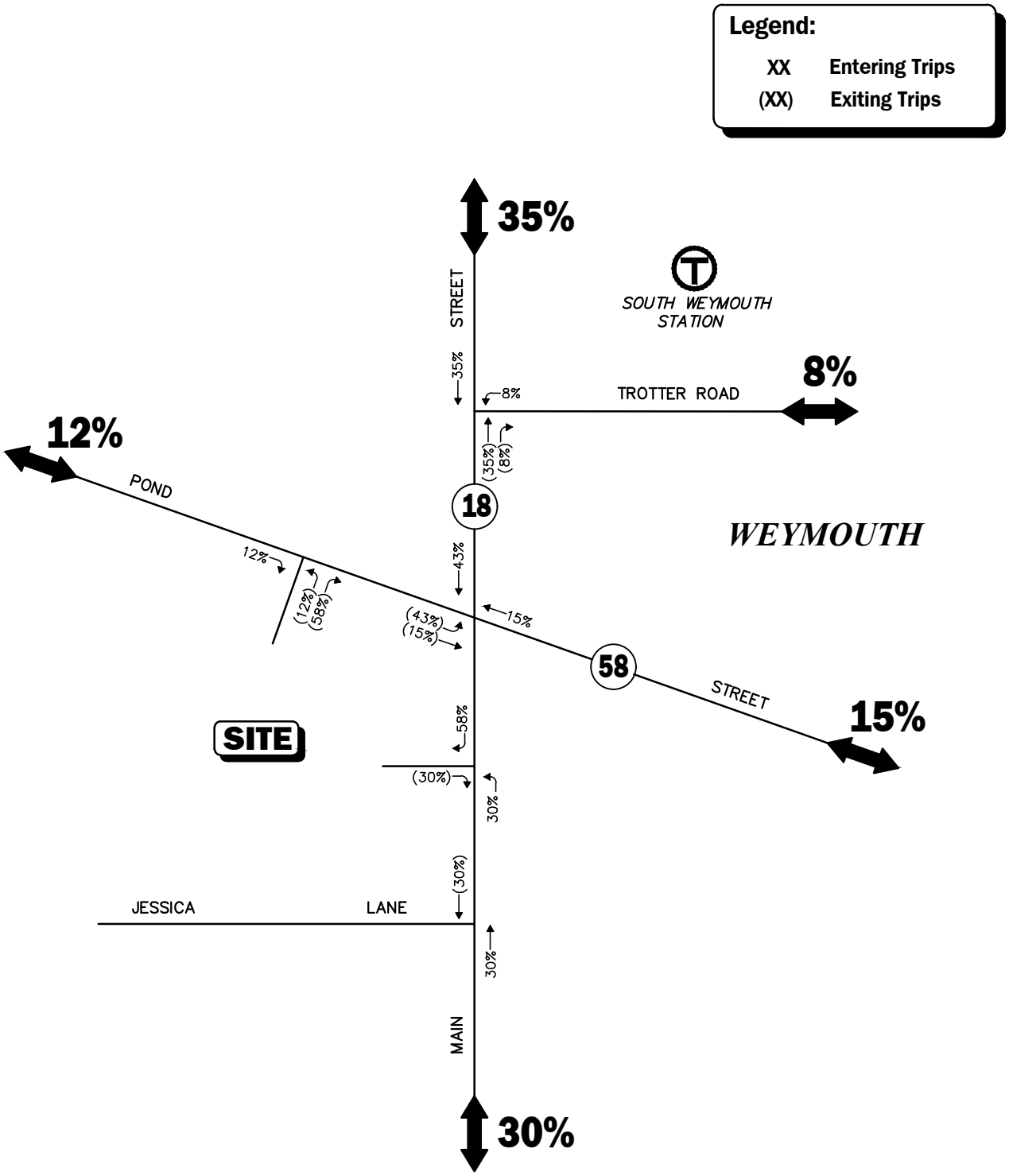

Not To Scale

Figure 9

Trip Distribution Map

Vanasse & Associates inc

R:\8428\8428NT2.dwg, 1/20/2023 3:03:32 PM

Copyright © 2022 by VAi. All Rights Reserved.

Legend:

XX	Entering Trips
(XX)	Exiting Trips

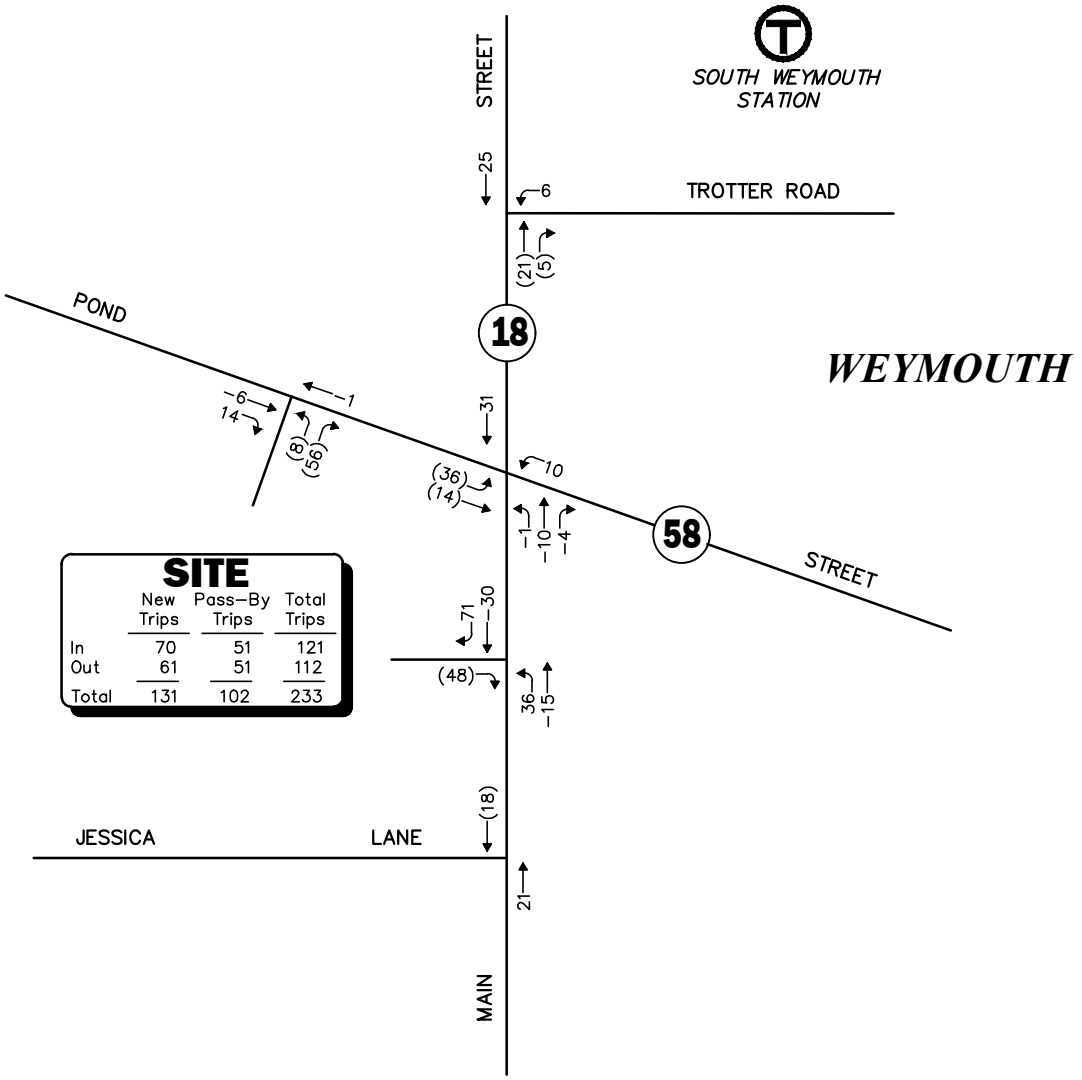

SITE

	New Trips	Pass-By Trips	Total Trips
In	70	51	121
Out	61	51	112
Total	131	102	233

Not To Scale

Figure 10

Project-Generated Weekday Morning Peak-Hour Traffic Volumes

Vanasse & Associates inc

Copyright © 2022 by VAi. All Rights Reserved.

R:\8428\8428NT2.dwg, 1/20/2023 3:03:30 PM

Legend:

XX	Entering Trips
(XX)	Exiting Trips

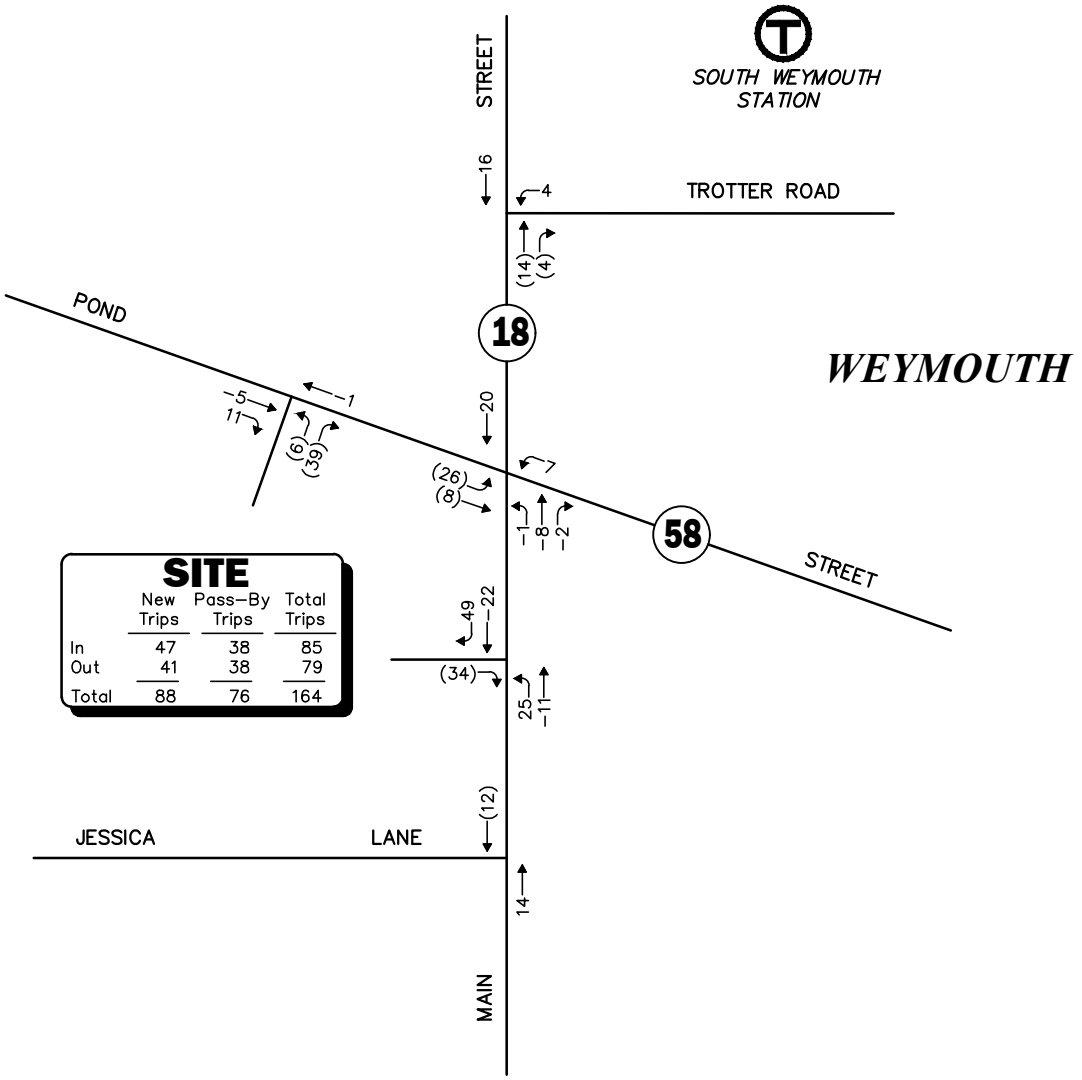

SITE

	New Trips	Pass-By Trips	Total Trips
In	47	38	85
Out	41	38	79
Total	88	76	164

Not To Scale

Figure 11

Project-Generated Weekday Evening Peak-Hour Traffic Volumes

Vanasse & Associates inc

Copyright © 2022 by VAi. All Rights Reserved.

R:\8428\8428NT2.dwg, 1/20/2023 3:03:18 PM

Legend:

XX	Entering Trips
(XX)	Exiting Trips

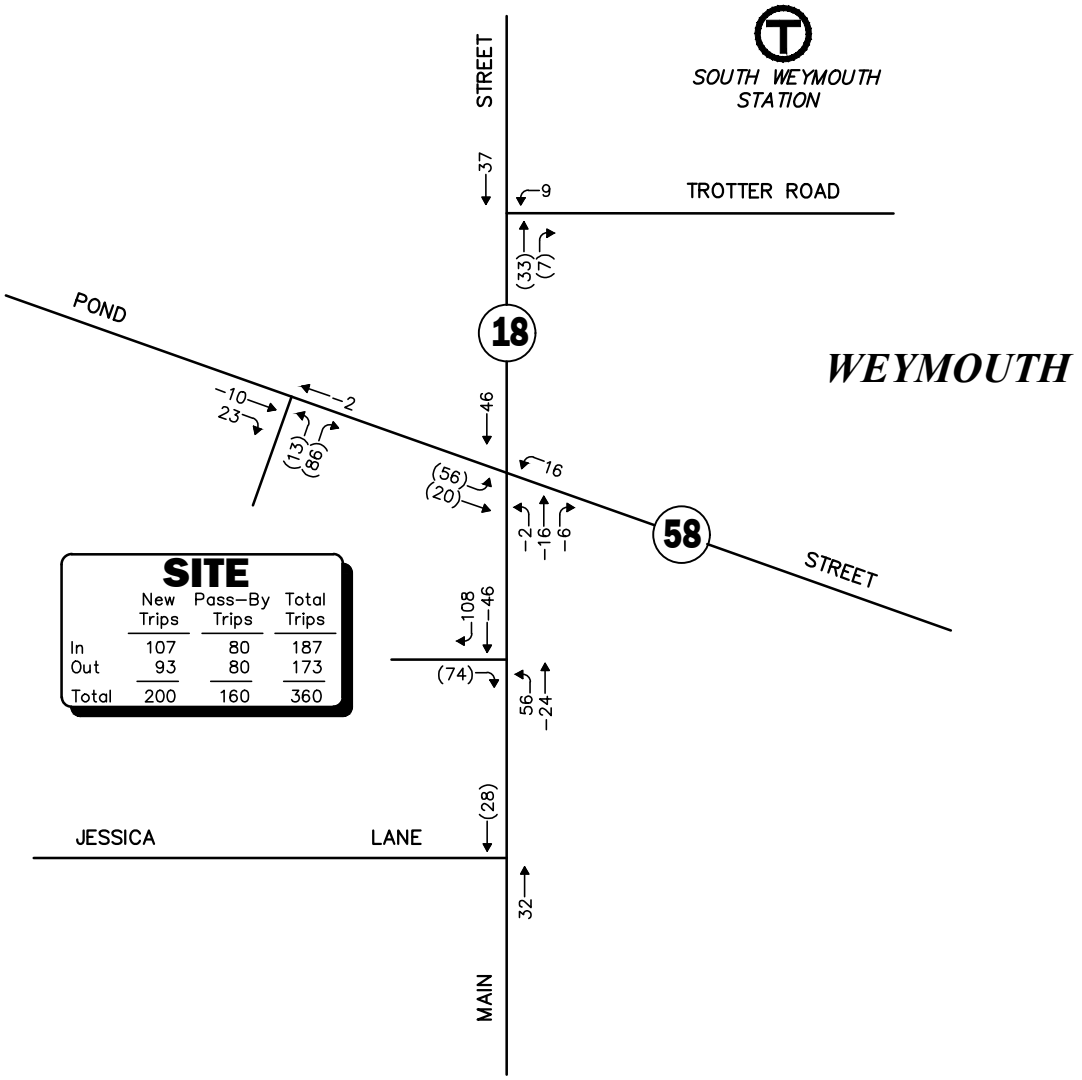

SITE

	New Trips	Pass-By Trips	Total Trips
In	107	80	187
Out	93	80	173
Total	200	160	360

Not To Scale

Figure 12

Project-Generated Saturday Midday Peak-Hour Traffic Volumes

Vanasse & Associates inc

R:\8428\8428NT2.dwg, 1/20/2023 3:03:28 PM

Copyright © 2022 by VAi. All Rights Reserved.

FUTURE TRAFFIC VOLUMES – BUILD CONDITION

The 2030 Build condition traffic volumes consist of the 2030 No-Build traffic volumes with the addition of the traffic expected to be generated by the Project added to them. The 2030 Build weekday morning, weekday evening and Saturday midday peak-hour traffic-volumes are graphically depicted on Figures 13, 14 and 15, respectively.

A summary of peak-hour projected traffic-volume increases outside of the study area that is the subject of this assessment is shown in Table 7. These changes are a result of the construction of the Project.

Table 7
PEAK-HOUR TRAFFIC-VOLUME INCREASES

Location/Peak Hour	2022 Existing	2030 No-Build	2030 Build	Traffic Volume Increase Over No-Build	Percent Increase Over No-Build
Main Street, north of Trotter Road:					
Weekday Morning	1,893	2,393	2,439	46	1.9
Weekday Evening	2,054	2,679	2,709	30	1.1
Saturday Midday	1,997	2,628	2.698	70	2.7
Main Street, south of Jessica Lane:					
Weekday Morning	1,520	1,987	2,026	39	2.0
Weekday Evening	1,762	2,271	2,297	26	1.1
Saturday Midday	1,795	2,312	2,372	60	2.6
Pond Street, east of Main Street:					
Weekday Morning	869	978	998	20	2.0
Weekday Evening	939	1,097	1,110	13	1.2
Saturday Midday	769	913	943	30	3.3
Pond Street, west of the Project Site:					
Weekday Morning	699	904	919	15	1.7
Weekday Evening	751	933	944	11	1.2
Saturday Midday	679	856	880	24	2.8
Trotter Road, east of Main Street:					
Weekday Morning	535	1,183	1,194	11	0.9
Weekday Evening	557	1,196	1,204	8	0.7
Saturday Midday	398	1,033	1,049	16	1.5

As shown in Table 7, Project-related traffic-volume increases outside of the study area relative to 2030 No-Build conditions are anticipated to range from 0.7 to 3.3 percent during the peak periods, with vehicle increases shown to range from 8 to 70 vehicles. ***When dispersed over the peak-hour, such increases would not be expected to result in a significant impact (increase) on motorist delays or vehicle queuing outside of the immediate study area that is the subject of this assessment.***

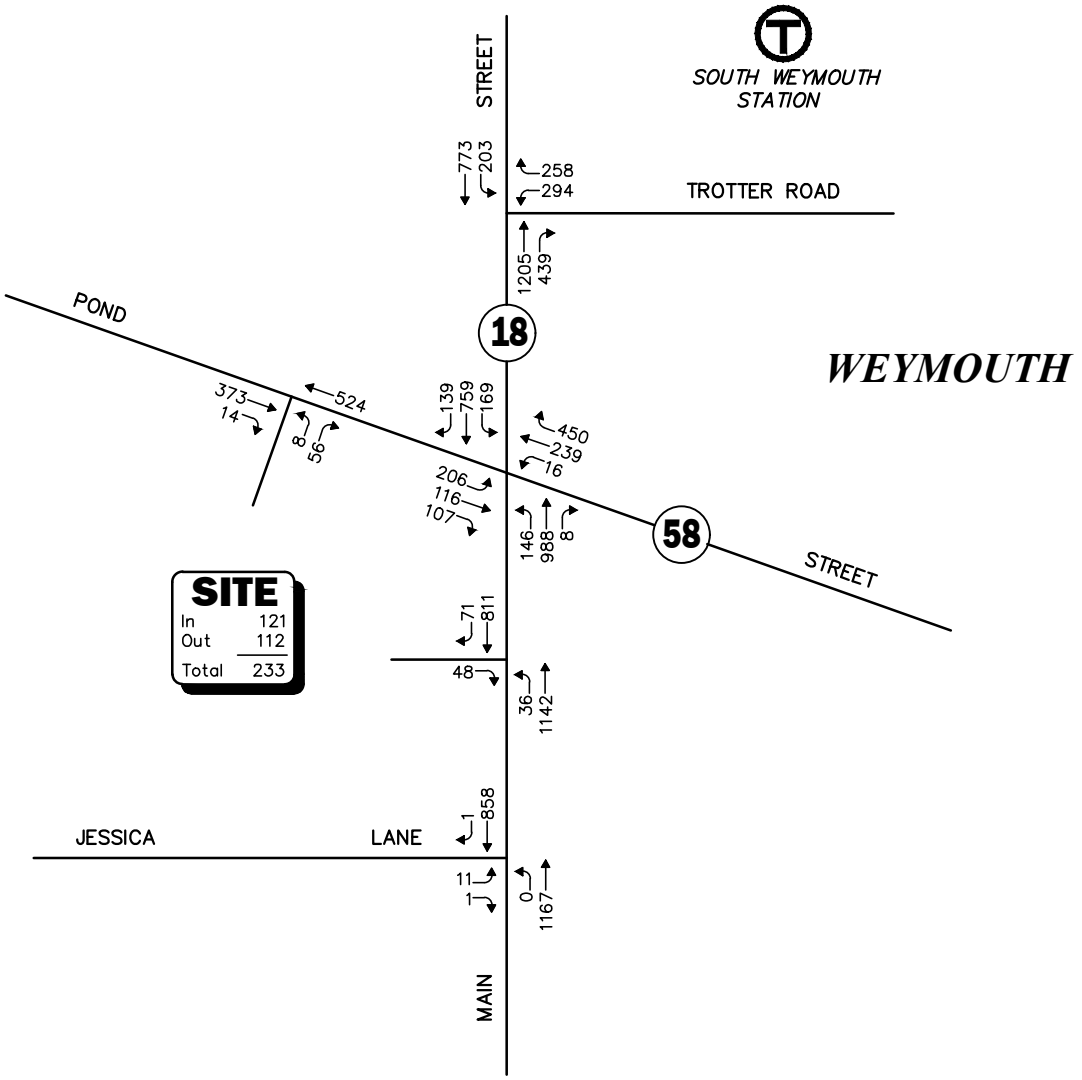

Not To Scale

Figure 13

2030 Build Weekday Morning Peak-Hour Traffic Volumes

Vanasse & Associates inc

R:\8428\8428NT2.dwg, 1/20/2023 3:03:24 PM

Copyright © 2022 by VAi. All Rights Reserved.

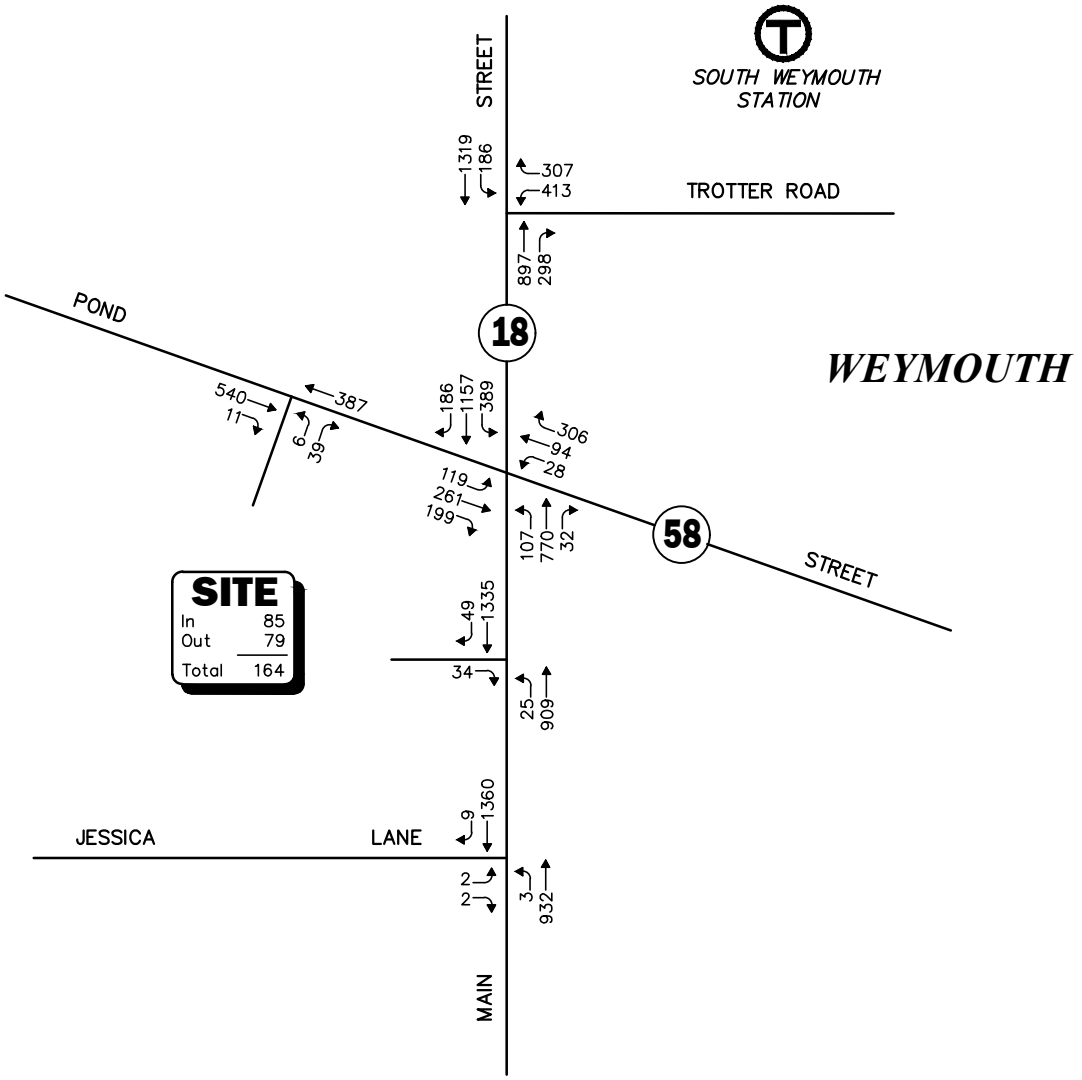

Not To Scale

Figure 14

2030 Build
Weekday Evening
Peak-Hour Traffic Volumes

Vanasse & Associates inc

R:\8428\8428NT2.dwg, 1/20/2023 3:03:20 PM

Copyright © 2022 by VAi. All Rights Reserved.

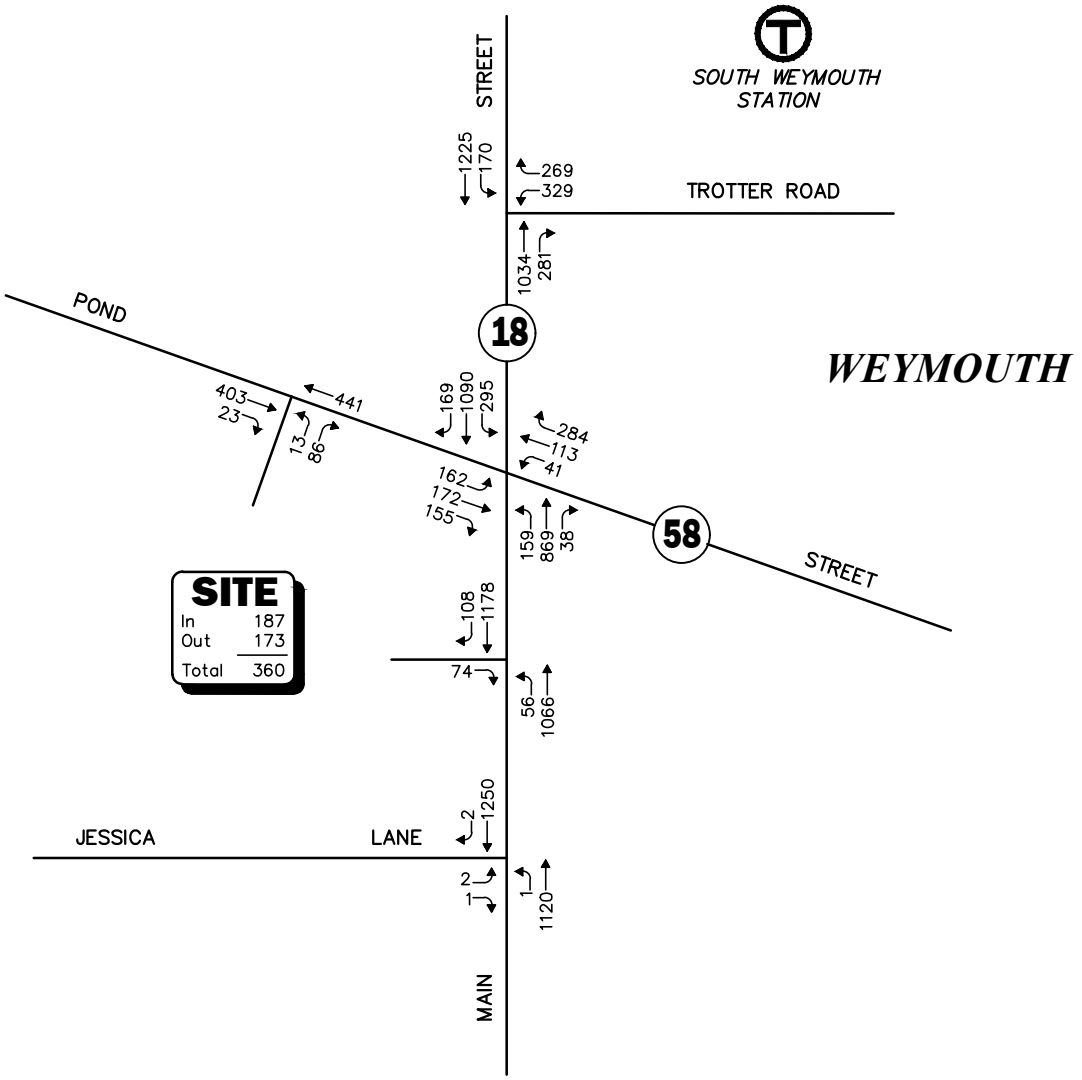

Not To Scale

Figure 15

2030 Build
Saturday Midday
Peak-Hour Traffic Volumes

Vanasse & Associates inc

R:\8428\8428NT2.dwg, 1/20/2023 3:03:22 PM

Copyright © 2022 by VAi. All Rights Reserved.

TRAFFIC OPERATIONS ANALYSIS

Measuring existing and future traffic volumes quantifies traffic flow within the study area. To assess quality of flow, roadway capacity and vehicle queue analyses were conducted under Existing, No-Build, and Build traffic-volume conditions. Capacity analyses provide an indication of how well the roadway facilities serve the traffic demands placed upon them, with vehicle queue analyses providing a secondary measure of the operational characteristics of an intersection or section of roadway under study.

METHODOLOGY

Levels of Service

A primary result of capacity analyses is the assignment of level of service to traffic facilities under various traffic-flow conditions.[14] The concept of level of service is defined as a qualitative measure describing operational conditions within a traffic stream and their perception by motorists and/or passengers. A level-of-service definition provides an index to quality of traffic flow in terms of such factors as speed, travel time, freedom to maneuver, traffic interruptions, comfort, convenience, and safety.

Six levels of service are defined for each type of facility. They are given letter designations from A to F, with level-of-service (LOS) A representing the best operating conditions and LOS F representing congested or constrained operating conditions.

Since the level of service of a traffic facility is a function of the traffic flows placed upon it, such a facility may operate at a wide range of levels of service, depending on the time of day, day of week, or period of year.

[14]The capacity analysis methodology is based on the concepts and procedures presented in the *Highway Capacity Manual;* Transportation Research Board; Washington, DC; 2010.

Signalized Intersections

The six levels of service for signalized intersections may be described as follows:

- *LOS A* describes operations with very low control delay; most vehicles do not stop at all.
- *LOS B* describes operations with relatively low control delay. However, more vehicles stop than LOS A.
- *LOS C* describes operations with higher control delays. Individual cycle failures may begin to appear. The number of vehicles stopping is significant at this level, although many still pass through the intersection without stopping.
- *LOS D* describes operations with control delay in the range where the influence of congestion becomes more noticeable. Many vehicles stop and individual cycle failures are noticeable.
- *LOS E* describes operations with high control delay values. Individual cycle failures are frequent occurrences.
- *LOS F* describes operations with high control delay values that often occur with over-saturation. Poor progression and long cycle lengths may also be major contributing causes to such delay levels.

Levels of service for signalized intersections are calculated using the operational analysis methodology of the 2000 *Highway Capacity Manual*[15] and implemented as a part of the Synchro® 11 software. This method assesses the effects of signal type, timing, phasing, and progression; vehicle mix; and geometrics on delay. Level-of-service designations are based on the criterion of control or signal delay per vehicle. Control or signal delay is a measure of driver discomfort, frustration, and fuel consumption, and includes initial deceleration delay approaching the traffic signal, queue move-up time, stopped delay and final acceleration delay. Table 8 summarizes the relationship between level of service and control delay. The tabulated control delay criterion may be applied in assigning level-of-service designations to individual lane groups, to individual intersection approaches, or to entire intersections.

Table 8
LEVEL-OF-SERVICE CRITERIA
FOR SIGNALIZED INTERSECTIONS[a]

Level of Service	Control (Signal) Delay Per Vehicle (Seconds)
A	≤10.0
B	10.1 to 20.0
C	20.1 to 35.0
D	35.1 to 55.0
E	55.1 to 80.0
F	>80.0

[a]Source: *Highway Capacity Manual*, Transportation Research Board; Washington, DC; 2000; page 16-2.

[15]*Highway Capacity Manual*; Transportation Research Board; Washington, DC; 2000.

Unsignalized Intersections

The six levels of service for unsignalized intersections may be described as follows:

- *LOS A* represents a condition with little or no control delay to minor street traffic.
- *LOS B* represents a condition with short control delays to minor street traffic.
- *LOS C* represents a condition with average control delays to minor street traffic.
- *LOS D* represents a condition with long control delays to minor street traffic.
- *LOS E* represents operating conditions at or near capacity level, with very long control delays to minor street traffic.
- *LOS F* represents a condition where minor street demand volume exceeds capacity of an approach lane, with extreme control delays resulting.

The levels of service of unsignalized intersections are determined by application of a procedure described in the *Highway Capacity Manual 6th Edition.*[16] Level of service is measured in terms of average control delay. Mathematically, control delay is a function of the capacity and degree of saturation of the lane group and/or approach under study and is a quantification of motorist delay associated with traffic control devices such as traffic signals and STOP signs. Control delay includes the effects of initial deceleration delay approaching a STOP sign, stopped delay, queue move-up time, and final acceleration delay from a stopped condition. Definitions for level of service at unsignalized intersections are also given in the *Highway Capacity Manual 6th Edition*. Table 8 summarizes the relationship between level of service and average control delay for two-way stop controlled and all-way stop controlled intersections.

Table 8
LEVEL-OF-SERVICE CRITERIA FOR UNSIGNALIZED INTERSECTIONS[a]

Level-Of-Service by Volume-to-Capacity Ratio		Average Control Delay
v/c ≤ 1.0	v/c > 1.0	(Seconds Per Vehicle)
A	F	≤10.0
B	F	10.1 to 15.0
C	F	15.1 to 25.0
D	F	25.1 to 35.0
E	F	35.1 to 50.0
F	F	>50.0

[a]Source: *Highway Capacity Manual*; Transportation Research Board; Washington, DC; 2016; page 20-6.

[16]*Highway Capacity Manual*; Transportation Research Board; Washington, DC; 2016.

Vehicle Queue Analysis

Vehicle queue analyses are a direct measurement of an intersection's ability to process vehicles under various traffic control and volume scenarios and lane use arrangements. The vehicle queue analysis was performed using the Synchro® intersection capacity analysis software which is based upon the methodology and procedures presented in the 6th Edition *Highway Capacity Manual*. The Synchro® vehicle queue analysis methodology is a simulation based model which reports the number of vehicles that experience a delay of six seconds or more at an intersection. For signalized intersections, Synchro® reports both the average (50th percentile) the 95th percentile vehicle queue. For unsignalized intersections, Synchro® reports the 95th percentile vehicle queue. Vehicle queue lengths are a function of the capacity of the movement under study and the volume of traffic being processed by the intersection during the analysis period. The 95th percentile vehicle queue is the vehicle queue length that will be exceeded only 5 percent of the time, or approximately 3 minutes out of 60 minutes during the peak one hour of the day (during the remaining 57 minutes, the vehicle queue length will be less than the 95th percentile queue length).

ANALYSIS RESULTS

Level-of-service and vehicle queue analyses were conducted for 2022 Existing, 2030 No-Build and 2030 Build conditions for the intersections within the study area. The results of the intersection capacity and vehicle queue analyses are summarized in Tables 10 and 11. The detailed analysis results are presented in the Appendix.

The following is a summary of the level-of-service and vehicle queue analyses for the intersections within the study area. For context, we note that an LOS of "D" or better is generally defined as "acceptable" operating conditions.

Main Street at Trotter Road

The addition of Project-related traffic was shown to result in an increase in overall average motorist delay of 0.7 seconds during the Saturday midday peak-hour that resulted in a change in overall level of service from LOS B to LOS C, with vehicle queues at the intersection shown to increase by up to one (1) vehicle with the addition of Project-related traffic. Independent of the Project, left-turn movements from Trotter Road during the weekday morning and evening peak hours and left-turn movements from Main Street southbound and through/right-turn movements from Main Street northbound during the weekday morning peak-hour are currently or are predicted to operate at or over capacity (i.e., LOS "E" or "F", respectively).

Main Street at Pond Street

The addition of Project-related traffic was shown to result in an increase in overall average motorist delay of 21.0 seconds during the weekday morning peak-hour that caused a change in overall level of service from LOS D to LOS E, with vehicle queues at the intersection predicted to increase by up to four (4) vehicles with the addition of Project-related traffic. Focusing on individual movements, the following level of service changes were identified to occur as a result of the addition of Project-related traffic: *weekday morning peak-hour* – through/right-turn movements from Pond Street southeastbound were shown to change from LOS D to LOS E (1.9 second increase in average motorist delay); *weekday evening peak-hour* – left-turn movements from Pond Street southeastbound were shown to change from LOS D to LOS E (5.2 second increase in average motorist delay); and *Saturday midday peak-hour* – left-turn movements from Pond Street

southeastbound were shown to change from LOS D to LOS F (a predicted increase in average motorist delay that resulted in a four (4) vehicle increase in residual queuing), through/right-turn movements from Pond Street southeastbound were shown to change from LOS E to LOS F (14.2 second increase in average motorist delay), and left-turn/through movements from Pond Street northwestbound were shown to change from LOS E to LOS F (a predicted increase in average motorist delay that resulted in a four (4) vehicle increase in residual queuing). Independent of the Project, one or more movements at the intersection are currently operating at or over capacity.

Main Street at Jessica Lane

The addition of Project-related traffic was shown to result in a predicted increase in average motorist delay for the Jessica Lane approach that resulted in a change in level of service from LOS E to LOS F during the Saturday midday peak-hour as a result of an increase in average motorist delay of 3.8 seconds, with no corresponding increase in vehicle queuing predicted to occur. Independent of the Project, the Jessica Lane approach was shown to operate at or over capacity during the peak hours under 2030 No-Build conditions. All movements along Main Street approaching the intersection were shown to operate at LOS A with negligible vehicle queuing.

Pond Street at the Project Site Driveway

This unsignalized intersection was analyzed assuming that "DO NOT BLOCK INTERSECTION" (R10-7) signs and pavement markings are installed on the Pond Street southeastbound approach to Main Street at the Project site driveway and <u>left-turn entering movements from Pond Street are prohibited</u>. With these accommodations, all movements exiting the Project driveway (left and right turns) were shown to operate at LOS B during both the weekday morning and evening peak hours and at LOS C during the Saturday midday peak-hour, with vehicle queues of up to one (1) vehicle which can be accommodated within the Project site without inhibiting the movement of vehicles, pedestrians, or bicyclists along Pond Street. All movements along Pond Street were shown to operate at LOS A during the peak hours with negligible vehicle queueing predicted. That being said, actual operating conditions (motorist delays and vehicle queuing) will be directly related to vehicle queuing along Pond Street approaching Main Street.

Main Street at the Project Site Driveway

Right-turn movements exiting the Project site driveway onto Main Street (left-turn exiting movements are prohibited) were shown to operate at LOS B during the weekday morning peak-hour and at LOS C during both the weekday evening and Saturday midday peak hours, with vehicle queues of up to one (1) vehicle which can be accommodated within the Project site without inhibiting the movement of vehicles, pedestrians, or bicyclists along Main Street. All movements along Main Street approaching the intersection were shown to operate at LOS A with queues of up to one (1) vehicle.

Table 10
SIGNALIZED INTERSECTION LEVEL-OF-SERVICE AND VEHICLE QUEUE SUMMARY

	2022 Existing				2030 No-Build				2030 Build			
Signalized Intersection/Peak-hour/Movement	V/C[a]	Delay[b]	LOS[c]	Queue[d] 50th/95th	V/C	Delay	LOS	Queue 50th/95th	V/C	Delay	LOS	Queue 50th/95th
Main Street at Trotter Road												
Weekday Morning:												
Trotter Road WB LT	0.54	51.2	D	4/6	0.83	57.4	E	10/14	0.84	58.5	E	10/14
Trotter Road WB RT	0.07	45.6	D	0/2	0.20	36.8	D	0/3	0.20	36.7	D	0/3
Main Street NB TH/RT	0.62	13.3	B	12/20	1.02	55.8	E	33/39	1.04	62.1	E	34/40
Main Street SB LT	0.54	12.5	B	1/3	0.83	55.9	E	6/8	0.83	55.9	E	6/8
Main Street SB TH	0.27	3.3	A	3/4	0.39	8.1	A	6/7	0.40	8.3	A	7/7
Overall	--	**13.3**	**B**	--	--	**42.0**	**D**	--	--	**45.1**	**D**	--
Weekday Evening:												
Trotter Road WB LT	0.82	56.2	E	9/10	1.30	>80.0	F	22/23	1.46	>80.0	F	22/23
Trotter Road WB RT	0.13	36.7	D	0/1	0.44	38.1	D	2/3	0.57	38.1	D	3/4
Main Street NB TH/RT	0.45	14.1	B	9/11	0.69	23.6	C	14/20	0.70	23.6	C	14/20
Main Street SB LT	0.26	8.2	A	1/2	0.64	23.0	C	3/6	0.67	23.0	C	3/6
Main Street WB TH	0.44	8.2	A	8/10	0.57	11.4	B	11/13	0.58	11.4	B	11/13
Overall	--	**18.1**	**B**	--	--	**46.1**	**D**	--	--	**51.0**	**D**	--
Saturday Midday:												
Trotter Road WB LT	0.54	38.3	D	4/6	0.79	43.1	D	7/12	0.81	44.0	D	8/13
Trotter Road WB RT	0.07	33.5	C	0/2	0.18	28.2	C	0/3	0.18	28.1	C	0/3
Main Street NB TH/RT	0.45	9.5	A	6/10	0.75	21.9	C	13/21	0.78	23.0	C	14/22
Main Street SB LT	0.23	5.1	A	1/1	0.64	23.5	C	2/5	0.65	25.8	C	2/5
Main Street SB TH	0.36	4.5	A	4/6	0.53	9.1	A	8/10	0.55	9.4	A	9/11
Overall	--	**10.1**	**B**	--	--	**19.8**	**B**	--	--	**20.5**	**C**	--

See notes at end of table.

Table 10 (Continued)
SIGNALIZED INTERSECTION LEVEL-OF-SERVICE AND VEHICLE QUEUE SUMMARY

	2022 Existing				2030 No-Build				2030 Build			
Signalized Intersection/Peak-hour/Movement	V/C[a]	Delay[b]	LOS[c]	Queue[d] 50th/95th	V/C	Delay	LOS	Queue 50th/95th	V/C	Delay	LOS	Queue 50th/95th
Main Street at Pond Street												
Weekday Morning:												
Main Street NB LT	0.51	57.2	E	5/8	0.50	55.4	E	6/9	0.50	55.6	E	6/9
Main Street NB TH/RT	0.40	16.9	B	9/13	0.55	23.0	C	14/18	0.54	22.8	C	13/18
Main Street SB LT	0.66	65.7	E	6/9	0.69	65.3	E	7/10	0.69	65.3	E	7/10
Main Street SB TH	0.28	16.9	B	6/8	0.44	22.3	C	10/12	0.46	22.5	C	11/13
Main Street SB RT	0.05	14.4	B	0/1	0.14	18.2	B	2/3	0.14	18.1	B	2/3
Pond Street SEB LT	0.97	>80.0	F	4/8	1.78	>80.0	F	11/18	2.34	>80.0	F	15/22
Pond Street SEB TH/RT	0.60	57.8	E	6/10	0.58	54.6	D	7/11	0.63	56.5	E	8/12
Pond Street NWB LT/TH	0.73	63.9	E	9/13	0.70	59.6	E	10/14	0.87	76.9	E	11/17
Pond Street NWB RT	0.37	37.9	D	3/6	0.48	35.5	D	6/9	0.47	35.5	D	5/9
Overall	--	**36.5**	**D**	--	--	**55.3**	**D**	--	--	**76.3**	**E**	--
Weekday Evening:												
Main Street NB LT	0.53	62.5	E	4/7	0.53	61.2	E	5/7	0.53	61.4	E	5/7
Main Street NB TH/RT	0.47	32.3	C	10/13	0.67	40.3	D	15/18	0.66	40.1	D	15/18
Main Street SB LT	0.67	49.2	D	11/15	0.74	49.5	D	14/19	0.74	49.5	D	14/18
Main Street SB TH	0.43	17.8	B	10/12	0.59	21.8	C	15/19	0.60	21.9	C	16/19
Main Street SB RT	0.08	13.7	B	1/2	0.17	15.4	B	2/4	0.17	15.3	B	2/4
Pond Street SEB LT	0.19	48.0	D	2/3	0.46	52.3	D	4/6	0.61	57.5	E	5/8
Pond Street SEB TH/RT	1.17	>80.0	F	19/28	1.27	>80.0	F	22/31	1.29	>80.0	F	23/32
Pond Street NWB LT/TH	1.03	>80.0	F	5/10	1.24	>80.0	F	6/12	1.65	>80.0	F	8/13
Pond Street NWB RT	0.18	20.0	C	0/2	0.22	17.9	B	0/2	0.22	17.9	B	0/2
Overall	--	**52.8**	**D**	--	--	**58.9**	**E**	--	--	**66.8**	**E**	--
Saturday Midday:												
Main Street NB LT	0.61	49.3	D	5/7	0.62	48.8	D	5/8	0.62	49.0	D	5/8
Main Street NB TH/RT	0.51	24.5	C	9/12	0.82	40.3	D	15/19	0.80	39.3	D	14/18
Main Street SB LT	0.60	42.2	D	7/10	0.58	34.7	C	8/12	0.59	34.9	C	8/12
Main Street SB TH	0.42	18.0	B	8/11	0.61	22.2	C	12/17	0.64	22.8	C	13/18
Main Street SB RT	0.06	14.0	B	0/1	0.16	16.0	B	1/3	0.16	16.0	B	1/3
Pond Street SEB LT	0.28	39.1	D	2/3	0.58	44.7	D	4/6	0.94	>80.0	F	6/10
Pond Street SEB TH/RT	0.88	64.6	E	9/13	0.93	74.1	E	10/15	0.99	>80.0	F	12/16
Pond Street NWB LT/TH	0.69	52.4	D	4/8	0.84	71.1	E	5/9	1.50	>80.0	F	7/13
Pond Street NWB RT	0.15	19.0	B	0/2	0.05	13.7	B	0/2	0.18	13.7	B	0/2
Overall	--	**31.2**	**C**	--	--	**36.4**	**D**	--	--	**50.6**	**D**	--

[a]Volume-to-capacity ratio.
[b]Percentile delay per vehicle in seconds.
[c]Level-of-Service.
[d]Queue length in vehicles.
NB = northbound; SB = southbound; EB = eastbound; WB = westbound; NBW = northwestbound; SEB = southeastbound; LT = left-turning movements; TH = through movements; RT = right-turning movements.

Table 11
UNSIGNALIZED INTERSECTION LEVEL-OF-SERVICE AND VEHICLE QUEUE SUMMARY

	2022 Existing				2030 No-Build				2030 Build			
Unsignalized Intersection/Peak Hour/Movement	Demand[a]	Delay[b]	LOS[c]	Queue[d] 95th	Demand	Delay	LOS	Queue 95th	Demand	Delay	LOS	Queue 95th
Main Street at Jessica Lane												
Weekday Morning:												
Jessica Lane EB LT/RT	11	24.9	C	1	12	44.2	E	1	12	45.4	E	1
Main Street NB LT/TH	917	0.0	A	0	1,146	0.0	A	0	1,167	0.0	A	0
Main Street SB TH/RT	603	0.0	A	0	841	0.0	A	0	859	0.0	A	0
Weekday Evening:												
Jessica Lane EB LT/RT	4	29.2	D	0	4	>50.0	F	1	4	>50.0	F	1
Main Street NB LT/TH	726	0.0	A	0	932	0.1	A	0	935	0.1	A	0
Main Street SB TH/RT	1042	0.0	A	0	1,357	0.0	A	0	1,369	0.0	A	0
Saturday Midday:												
Jessica Lane EB LT/RT	3	26.8	D	0	3	46.9	E	0	3	>50.0	F	0
Main Street NB LT/TH	880	0	A	0	1,089	0.0	A	0	1,121	0.0	A	0
Main Street SB TH/RT	916	0	A	0	1,224	0.0	A	0	1,252	0.0	A	0
Pond Street at the Project Site Driveway												
Weekday Morning:												
Project Site Driveway NEB LT/RT	--	--	--	--	--	--	--	--	64	12.6	B	1
Pond Street SEB TH/RT	--	--	--	--	--	--	--	--	387	0.0	A	0
Pond Street NWB TH	--	--	--	--	--	--	--	--	524	0.0	A	0
Weekday Evening:												
Project Site Driveway NEB LT/RT	--	--	--	--	--	--	--	--	45	13.7	B	1
Pond Street SEB TH/RT	--	--	--	--	--	--	--	--	551	0.0	A	0
Pond Street NWB TH	--	--	--	--	--	--	--	--	393	0.0	A	0
Saturday Midday:												
Project Site Driveway NEB LT/RT	--	--	--	--	--	--	--	--	99	14.3	C	1
Pond Street SEB TH/RT	--	--	--	--	--	--	--	--	426	0.0	A	0
Pond Street NWB TH	--	--	--	--	--	--	--	--	441	0.0	A	0

See notes at end of Table.

Table 11 (Continued)
UNSIGNALIZED INTERSECTION LEVEL-OF-SERVICE AND VEHICLE QUEUE SUMMARY

	2022 Existing				2030 No-Build				2030 Build			
Unsignalized Intersection/Peak Hour/Movement	Demand[a]	Delay[b]	LOS[c]	Queue[d] 95th	Demand	Delay	LOS	Queue 95th	Demand	Delay	LOS	Queue 95th
Main Street at the Project Site Driveway												
Weekday Morning:												
Project Site Driveway EB RT	--	--	--	--	--	--	--	--	48	12.7	B	1
Main Street NB LT/TH	--	--	--	--	--	--	--	--	1,178	1.4	A	0
Main Street SB TH/RT	--	--	--	--	--	--	--	--	882	0.0	A	0
Weekday Evening:												
Project Site Driveway EB RT	--	--	--	--	--	--	--	--	34	16.0	C	1
Main Street NB LT/TH	--	--	--	--	--	--	--	--	934	1.1	A	0
Main Street SB TH/RT	--	--	--	--	--	--	--	--	1,384	0.0	A	0
Saturday Midday:												
Project Site Driveway EB RT	--	--	--	--	--	--	--	--	74	17.6	C	1
Main Street NB LT/TH	--	--	--	--	--	--	--	--	1,122	2.8	A	1
Main Street SB TH/RT	--	--	--	--	--	--	--	--	1,286	0.0	A	0

[a]Demand in vehicles per hour.
[b]Average control delay per vehicle (in seconds).
[c]Level-of-Service.
[d]Queue length in vehicles.
NB = northbound; SB = southbound; EB = eastbound; WB = westbound; NEB = northeastbound; SEB = southeastbound; NWB = northwestbound; LT = left-turning movements; TH = through movements; RT = right-turning movements.

DRIVE-THROUGH FACILITY QUEUING ANALYSIS

Starbuck® Drive-Through Facility

In order to assess vehicle queuing associated with the proposed Starbuck® drive-through window facility, weekday morning peak period vehicle queue observations that were performed at the existing Starbucks® coffee shops located at 271 Main Street in Wilmington, Massachusetts, and at 784 Plain Street in Marshfield, Massachusetts, were obtained from studies conducted for Starbucks® coffee shops in Wilmington[17] and Hyannis.[18] For reference, the proposed drive-through window facility for the Project can accommodate up to 12 vehicles in queue without impeding access or circulation within the Project site and includes a by-pass lane. Table 12 summarizes the vehicle queue observations obtained from the Wilmington and Marshfield Starbucks® coffee shops.

Table 12
DRIVE-THROUGH WINDOW
VEHICLE QUEUE OBSERVATIONS[a]

	271 Main Street, Wilmington, MA (5:30 – 9:30 AM)	784 Plain Street, Marshfield, MA (7:00 – 9:00 AM)
Average	2	7
Maximum	7	9

[a]Measured from the pick-up window to the end of vehicle queue.

As can be seen in Table 12, the average observed vehicle queue was found to be two (2) vehicles at the Wilmington coffee shop and seven (7) vehicles at the Marshfield location. The maximum observed vehicle queue was found to be seven (7) vehicles in Wilmington and nine (9) vehicles in Marshfield. Given that the proposed drive-through window facility can accommodate up to 12 vehicles in queue (measured from the pick-up window to the end of the row of parking to the

[17]*Starbucks Coffee Shop Drive-Through Lane Reconfiguration*, VAI, January 2021.
[18]*Traffic Impact and Access Study*, World Tech Engineering, Updated July 2021.

north of the building that will contain the coffee shop), the proposed design is sufficient to accommodate the maximum observed vehicle queue (seven (7) vehicles) without inhibiting circulation within the Project site or the movement of vehicles, pedestrians, or bicyclists.

Chipotle® Drive-Through Facility

The Chipotle® restaurant proposed as a part of the Project will contain a drive-through window that services mobile order customers only. This new concept, named a Chipotlane®, is becoming more common in new Chipotle® developments, but is still rare in the northeast. As such, in order to assess potential vehicle queuing associated with the proposed Chipotle® drive-through window facility, a statistical vehicle queueing analysis was performed. This analysis was based on the anticipated operating characteristics of the Project, which include: i) the maximum number of customers served during the peak-hour (calculated to be 16 vehicles during the Saturday midday peak-hour)[19] and ii) the processing rate, or time between arrival and departure of the customer vehicle (expected to be approximately two (2) minutes based on a 2020 study by RatukenReady©, an eCommerce company that assists companies to create curbside pick-up opportunities[20]). The Chipotlane® acts similar to curbside pick-up rather than a traditional drive-through lane, as customers have prepaid online and are just waiting in line to pick food up.

Assuming random arrivals and a process rate of two (2) minutes per customer during the peak hours results in a theoretical 95th percentile vehicle queue of up to four (4) vehicles. Given that the proposed drive-through facility can accommodate up to seven (7) vehicles in queue measured from the pick-up window to the end of the drive-through lane, the proposed design is sufficient to accommodate the theoretical 95th percentile vehicle queue (up to four (4) vehicles) without inhibiting circulation within the Project site or the movement of vehicles, pedestrians, or bicyclists. Similar to the proposed coffee shop, a by-pass lane is provided.

The detailed statistical analysis is provided in the Appendix.

[19]Assumed to be 40 percent of the entering trips associated with the Chipotle® restaurant (2,426 sf) during the Saturday midday peak-hour (proportionately calculated to be 41 trips out of the 69 total entering trips attributed to the (2) fast casual restaurants that are to be located within the Project site). See Appendix for detailed calculations.

[20]Rakuten Ready. 2020. "2020 Time Study.", page 11.

SIGHT DISTANCE EVALUATION

Sight distance measurements were performed at the Project site driveway intersections with Main Street and Pond Street in accordance with MassDOT and American Association of State Highway and Transportation Officials (AASHTO)[21] requirements. Both stopping sight distance (SSD) and intersection sight distance (ISD) measurements were performed. In brief, SSD is the distance required by a vehicle traveling at the design speed of a roadway, on wet pavement, to stop prior to striking an object in its travel path. ISD or corner sight distance (CSD) is the sight distance required by a driver entering or crossing an intersecting roadway to perceive an on-coming vehicle and safely complete a turning or crossing maneuver with on-coming traffic. In accordance with AASHTO standards, if the measured ISD is at least equal to the required SSD value for the appropriate design speed, the intersection can operate in a safe manner. Table 13 presents the measured SSD and ISD at the subject intersections.

[21] *A Policy on Geometric Design of Highway and Streets,* 7th Edition; American Association of State Highway and Transportation Officials (AASHTO); Washington D.C.; 2018.

Table 13
SIGHT DISTANCE MEASUREMENTS[a]

Intersection/Sight Distance Measurement	Feet		
	Required Minimum (SSD)	Desirable (ISD)[b]	Measured
Main Street at the Project Site Driveway			
Stopping Sight Distance:			
Main Street approaching from the north	360	--	500+[c]
Intersection Sight Distance:			
Looking to the north from the Project Site Driveway	360	430	500+[c]
Pond Street at the Project Site Driveway			
Stopping Sight Distance:			
Pond Street approaching from the east	250	--	500+[c]
Pond Street approaching from the west	250	--	500+
Intersection Sight Distance:			
Looking to the east from the Project Site Driveway	250	415	500+[c]
Looking to the west from the Project Site Driveway	250	365	500+

[a]Recommended minimum values obtained from *A Policy on Geometric Design of Highways and Streets,* 7th Edition; American Association of State Highway and Transportation Officials (AASHTO); 2018; and based on a 45 mph approach speed on Main Street and a 35 mph approach speed on Pond Street.
[b]Values shown are the intersection sight distance for a vehicle turning right or left exiting a roadway under STOP control such that motorists approaching the intersection on the major street should not need to adjust their travel speed to less than 70 percent of their initial approach speed. The gap time for the intersection sight distance values was increased by 0.5 seconds in order to account for the increased time required for left-turn vehicles existing the Pond Street driveway to cross the additional travel lane on the eastbound approach to Main Street.
[c]Clear line of sight is provided through the Main Street/Pond Street intersection.

As shown in Table 13, the available lines of sight at the Project site driveway intersections with Main Street and Pond Street were found to exceed the recommended minimum distance to function in a safe (SSD) and efficient (ISD) manner based on the appropriate approach speed.

CONCLUSIONS AND RECOMMENDATIONS

CONCLUSIONS

VAI has completed a detailed assessment of the potential impacts on the transportation infrastructure associated with the proposed construction of a mixed-use commercial development to be located at 505 Pond Street (Route 58) in Weymouth, Massachusetts. The following specific areas have been evaluated as they relate to the Project: i) access requirements; ii) potential off-site improvements; and iii) safety considerations; under existing and future conditions, both with and without the Project. Based on this assessment, we have concluded the following with respect to the Project:

1. Using trip-generation statistics published by the ITE[22] and with adjustment to account for internal trips and pass-by trips, the Project is expected to generate approximately 1,190 new vehicle trips on an average weekday (two-way volume over the operational day of the Project), with 131 new vehicle trips expected during the weekday morning peak-hour, 88 new vehicle trips expected during the weekday evening peak-hour and 200 new vehicle trips expected during the Saturday midday peak-hour;

2. In comparison to the former use that occupied the Project site (Factory Paint & Decorating), the Project is expected to result in 1,646 additional vehicle trips on an average weekday (two-way volume over the operational day of the Project inclusive of pass-by trips), with 195 additional vehicle trips expected during the weekday morning peak-hour, 42 additional vehicle trips expected during the weekday evening peak-hour and 268 additional vehicle trips expected during the Saturday midday peak-hour;

3. The Project will not have a significant impact (increase) on motorist delays or vehicle queuing over Existing or anticipated future conditions without the Project (No-Build conditions), acknowledging that one or move movements at the study area intersections are currently or are predicted to operate at or over capacity (i.e., LOS "E" or "F") independent of the Project;

[22] Ibid 1.

4. All movements exiting the Project site driveway to Pond Street were shown to operate at LOS C or better during the peak periods with minimal (up to one (1) vehicle) vehicle queuing assuming that "DO NOT BLOCK INTERSECTION" (R10-7) signs and pavement markings are install on the Pond Street eastbound approach to the Main Street/Pond Street intersection at the Project site driveway. That being said, actual delays and vehicle queuing for motorists exiting the Project site onto Pond Street will be directly related to vehicle queuing along Pond Street approaching Main Street;

5. All movements exiting the Project site driveway to Main Street were shown to operate at LOS C or better during the peak hours, with vehicle queuing of up to one (1) vehicle which can be accommodated within the Project site without inhibiting the movement of vehicles, pedestrians, or bicyclists along Main Street.

6. The drive-through window facilities are appropriately designed to accommodate the predicted maximum vehicle queue without impeding access, circulation or the movement of vehicles, pedestrians or bicyclists;

7. No apparent safety deficiencies were noted with respect to the motor vehicle crash history at the study area intersections; and

8. Lines of sight to and from the Project site driveway intersections with Main Street and Pond Street were found to exceed the required minimum distance for the intersections to function in a safe manner.

In consideration of the above, we have concluded that the Project can be accommodated within the confines of the existing transportation infrastructure in a safe and efficient manner with the implementation of the recommendations that follow.

RECOMMENDATIONS

A detailed transportation improvement program has been developed that is designed to provide safe and efficient access to the Project site and address any deficiencies identified at off-site locations evaluated in conjunction with this study. The improvements that have been recommended as a part of this evaluation and, where applicable, will be completed in conjunction with the Project subject to receipt of all necessary rights, permits, and approvals.

Project Access

Access to the Project site will continue to be provided by way of two (2) driveways that will intersect the south side of Pond Street approximately 90 feet west of Main Street and the west side of Main Street approximately 210 feet south of Pond Street, respectively (the approximate location of the existing driveways that serve the Project site). The Pond Street driveway will accommodate right-turn entering traffic and both left and right turns exiting; left-turn entering movements will be prohibited. The Main Street driveway will accommodate left and right-turn entering movements and right-turn exiting movements; left-turn exit movements will be prohibited. The following recommendations are offered with respect to Project access and internal circulation and are reflected on Figure 16:

- The Pond Street Project site driveway should be a minimum of 24-feet in width and support the turning and maneuvering requirements of delivery trucks and the largest anticipated

Source: Bohler Engineering and Google Earth.

0 30 60 Scale in Feet

Figure 16

Conceptual Improvement Plan
Main Street (Route 18) at
Pond Street (Route 58)
Weymouth, Massachusetts

Vanasse & Associates inc

Copyright © 2022 by VAi. All Rights Reserved.

R:\8428\8428CN2 (updated 2023_0117).dwg, 1/23/2023 10:16:36 AM

responding emergency vehicle as defined by the Weymouth Fire Department. "No Left Turn" signs should be installed facing westbound Pond Street motorists along the north and south sides of Pond Street at the driveway.

- In conjunction with the Project , the existing raised island along the Main Street south leg to Pond Street will be extended south and will include an opening to allow vehicles to turn left from Main Street into the Project site and prohibit left-turn exiting movements. In addition, a raised island will be installed in the center of the driveway to channelize exiting traffic and reinforce the left-turn restriction. The travel lanes on either side of the island should be a minimum of 20 feet in width unless a reduced width is approved by the Weymouth Fire Department.

- "DO NOT BLOCK INTERSECTION" (R10-7) signs and pavement markings should be installed on the Pond Street eastbound approach to the Main Street/Pond Street intersection at (opposite) the Project site driveway in order to facilitate left-turn movements exiting the to the Project site when vehicle queues are present on the Pond Street eastbound approach to Main Street.

- Vehicles exiting the Project should be placed under STOP-sign control with marked STOP-line provided.

- Drive aisles within the Project site should be a minimum of 23-feet in width where perpendicular parking is proposed in order to allow for vehicle maneuvering.

- Appropriate signs ("One-Way" and "Do Not Enter") and pavement markings should be provided to regulate and reinforce the one-way traffic flow through the drive-through facilities and along the adjacent travel (by-pass) lane.

- Vehicles exiting the drive-through window facilities should be placed under STOP-sign control with a marked STOP-line provided.

- All signs and pavement markings to be installed within the Project shall conform to the applicable standards of the *Manual on Uniform Traffic Control Devices* (MUTCD).[23]

- Marked crosswalks and Americans with Disabilities Act (ADA) compliant wheelchair ramps should be provided for crossing the Project site driveways and at pedestrian crossings within the Project site.

- Signs and landscaping to be installed as a part of the Project within intersection sight triangle areas should be designed and maintained so as not to restrict lines of sight.

- Snow accumulations (windrows) within sight triangle areas shall be promptly removed where such accumulations would impede sight lines.

[23] Ibid 2.

Off-Site

Main Street/Trotter Road and Main Street/Pond Street

Independent of the Project, specific movements at the Main Street/Trotter Road and the Main Street/Pond Street intersections are currently or are predicted to operate at or over capacity (i.e., LOS "E" or "F", respectively) during the peak hours. In an effort to off-set the predicted impact of the Project and to reduce motorist delays and vehicle queuing, the Project proponent will design and implement an optimal traffic signal timing, phasing and coordination plan for the Main Street/Trotter Road and the Main Street/Pond Street intersections. These improvements will be completed prior to the issuance of a Certificate of Occupancy for the Project, subject to receipt of all necessary rights, permits, and approvals, with a subsequent review of traffic operations at the intersections and further adjustment of the traffic signal timing, phasing and coordination as necessary within 6-months of the completion of the Project. As can be seen in Table 14, with implementation of these improvements, overall intersection operations will be improved to LOS D or better with reduced vehicle queuing.

Transportation Demand Management

Public transportation services are provided within the study area by the MBTA. The MBTA provides Commuter Rail service to the area from South Weymouth Station on the Kingston/Plymouth Commuter Rail Line, which provides service to South Station in Boston. South Weymouth Station is located to the north of the Project site at 89 Trotter Road (an approximate 5-minute walking distance). In addition, the MBTA also operates the RIDE paratransit service for eligible persons who cannot use fixed-route bus services all or some of the time due to a physical, cognitive, or mental disability in compliance with the Americans with Disabilities Act (ADA). In an effort to encourage the use of alternative modes of transportation to single-occupant vehicles, the following Transportation Demand Management (TDM) measures will be implemented as a part of the Project:

- A transportation coordinator will be assigned for the Project to coordinate the TDM program;
- Information regarding public transportation services, maps, schedules and fare information will be made available to employees of the project;
- A "welcome packet" will be provided to new employees detailing available public transportation services, bicycle and walking alternatives, and other commuter options;
- Tenants will be encouraged to offer specific amenities to discourage off-site trips, including providing a break-room equipped with a microwave and refrigerator; offering direct deposit of paychecks; coordinating with a dry-cleaning service for on-site pick-up and delivery; allowing telecommuting or flexible work schedules; and other such measures to reduce overall traffic volumes and travel during peak traffic volume periods;
- Pedestrian accommodations have been incorporated within the Project site to encourage walking; and
- Secure bicycle parking will be provided at an appropriate location(s) within the Project site.

With implementation of the aforementioned recommendations, safe and efficient access will be provided to the Project site and the Project can be accommodated within the confines of the existing transportation system.

Table 14
MITIGATED SIGNALIZED INTERSECTION LEVEL-OF-SERVICE AND VEHICLE QUEUE SUMMARY

	2030 No-Build				2030 Build				2030 Build with Mitigation			
Signalized Intersection/Peak-hour/Movement	V/C	Delay	LOS	Queue 50th/95th	V/C	Delay	LOS	Queue 50th/95th	V/C	Delay	LOS	Queue 50th/95th
Main Street at Trotter Road												
Weekday Morning:												
Trotter Road WB LT	0.83	57.4	E	10/14	0.84	58.5	E	10/14	0.91	60.4	E	8/13
Trotter Road WB RT	0.20	36.8	D	0/3	0.20	36.7	D	0/3	0.37	30.4	C	2/4
Main Street NB TH/RT	1.02	55.8	E	33/39	1.04	62.1	E	34/40	1.01	29.5	C	7/25
Main Street SB LT	0.83	55.9	E	6/8	0.83	55.9	E	6/8	0.91	60.0	E	4/8
Main Street SB TH	0.39	8.1	A	6/7	0.40	8.3	A	7/7	0.41	6.5	A	5/5
Overall	--	**42.0**	**D**	--	--	**45.1**	**D**	--	--	**28.4**	**C**	--
Weekday Evening:												
Trotter Road WB LT	1.30	>80.0	F	22/23	1.46	>80.0	F	22/23	0.91	52.9	D	16/16
Trotter Road WB RT	0.44	38.1	D	2/3	0.57	38.1	D	3/4	0.46	29.1	C	4/4
Main Street NB TH/RT	0.69	23.6	C	14/20	0.70	23.6	C	14/20	0.86	21.9	C	20/25
Main Street SB LT	0.64	23.0	C	3/6	0.67	23.0	C	3/6	0.84	54.7	D	4/10
Main Street SB TH	0.57	11.4	B	11/13	0.58	11.4	B	11/13	0.70	21.2	C	17/20
Overall	--	**46.1**	**D**	--	--	**51.0**	**D**	--	--	**28.6**	**C**	--
Saturday Midday:												
Trotter Road WB LT	0.79	43.1	D	7/12	0.81	44.0	D	8/13	0.82	54.3	D	10/14
Trotter Road WB RT	0.18	28.2	C	0/3	0.18	28.1	C	0/3	0.19	35.8	D	0/3
Main Street NB TH/RT	0.75	21.9	C	13/21	0.78	23.0	C	14/22	0.72	11.6	B	6/8
Main Street SB LT	0.64	23.5	C	2/5	0.65	25.8	C	2/5	0.66	26.8	C	3/6
Main Street SB TH	0.53	9.1	A	8/10	0.55	9.4	A	9/11	0.53	10.3	B	10/13
Overall	--	**19.8**	**B**	--	--	**20.5**	**C**	--	--	**18.0**	**B**	--

See notes at end of table.

Table 14 (Continued)
MITIGATED SIGNALIZED INTERSECTION LEVEL-OF-SERVICE AND VEHICLE QUEUE SUMMARY

	2030 No-Build				2030 Build				2030 Build with Mitigation			
Signalized Intersection/Peak-hour/Movement	V/C	Delay	LOS	Queue 50th/95th	V/C	Delay	LOS	Queue 50th/95th	V/C	Delay	LOS	Queue 50th/95th
Main Street at Pond Street												
Weekday Morning:												
Main Street NB LT	0.50	55.4	E	6/9	0.50	55.6	E	6/9	1.02	>80.0	F	4/9
Main Street NB TH/RT	0.55	23.0	C	14/18	0.54	22.8	C	13/18	0.86	35.5	D	11/15
Main Street SB LT	0.69	65.3	E	7/10	0.69	65.3	E	7/10	0.44	21.4	C	3/5
Main Street SB TH	0.44	22.3	C	10/12	0.46	22.5	C	11/13	0.47	11.8	B	5/6
Main Street SB RT	0.14	18.2	B	2/3	0.14	18.1	B	2/3	0.11	5.5	A	0/1
Pond Street SEB LT	1.78	>80.0	F	11/18	2.34	>80.0	F	15/22	1.22	>80.0	F	7/12
Pond Street SEB TH/RT	0.58	54.6	D	7/11	0.63	56.5	E	8/12	0.47	28.4	C	4/7
Pond Street NWB LT/TH	0.70	59.6	E	10/14	0.87	76.9	E	11/17	0.59	30.7	C	6/9
Pond Street NWB RT	0.48	35.5	D	6/9	0.47	35.5	D	5/9	0.29	12.2	B	0/2
Overall	--	**55.3**	**D**	--	--	**76.3**	**E**	--	--	**36.0**	**D**	--
Weekday Evening:												
Main Street NB LT	0.53	61.2	E	5/7	0.53	61.4	E	5/7	0.95	>80.0	F	4/9
Main Street NB TH/RT	0.67	40.3	D	15/18	0.66	40.1	D	15/18	0.60	29.0	C	11/14
Main Street SB LT	0.74	49.5	D	14/19	0.74	49.5	D	14/18	1.04	>80.0	F	14/21
Main Street SB TH	0.59	21.8	C	15/19	0.60	21.9	C	16/19	0.60	16.0	B	14/15
Main Street SB RT	0.17	15.4	B	2/4	0.17	15.3	B	2/4	0.16	7.2	A	1/1
Pond Street SEB LT	0.46	52.3	D	4/6	0.61	57.5	E	5/8	0.47	39.6	D	4/6
Pond Street SEB TH/RT	1.27	>80.0	F	22/31	1.29	>80.0	F	23/32	1.08	>80.0	F	16/25
Pond Street NWB LT/TH	1.24	>80.0	F	6/12	1.65	>80.0	F	8/13	1.08	>80.0	F	5/10
Pond Street NWB RT	0.22	17.9	B	0/2	0.22	17.9	B	0/2	0.21	17.9	B	0/2
Overall	--	**58.9**	**E**	--	--	**66.8**	**E**	--	--	**47.4**	**D**	--
Saturday Midday:												
Main Street NB LT	0.62	48.8	D	5/8	0.62	49.0	D	5/8	1.05	>80.0	F	6/12
Main Street NB TH/RT	0.82	40.3	D	15/19	0.80	39.3	D	14/18	0.76	36.8	D	14/18
Main Street SB LT	0.58	34.7	C	8/12	0.59	34.9	C	8/12	0.66	34.2	C	6/9
Main Street SB TH	0.61	22.2	C	12/17	0.64	22.8	C	13/18	0.58	13.3	B	8/9
Main Street SB RT	0.16	16.0	B	1/3	0.16	16.0	B	1/3	0.15	7.0	A	1/1
Pond Street SEB LT	0.58	44.7	D	4/6	0.94	>80.0	F	6/10	0.84	66.4	E	6/10
Pond Street SEB TH/RT	0.93	74.1	E	10/15	0.99	>80.0	F	12/16	0.91	68.3	E	12/16
Pond Street NWB LT/TH	0.84	71.1	E	5/9	1.50	>80.0	F	7/13	1.06	>80.0	F	6/12
Pond Street NWB RT	0.05	13.7	B	0/2	0.18	13.7	B	0/2	0.18	15.0	B	0/2
Overall	--	**36.4**	**D**	--	--	**50.6**	**D**	--	--	**40.0**	**D**	--

[a]Volume-to-capacity ratio.
[b]Percentile delay per vehicle in seconds.
[c]Level-of-Service.
[d]Queue length in vehicles.
NB = northbound; SB = southbound; EB = eastbound; WB = westbound; NBW = northwestbound; SEB = southeastbound; LT = left-turning movements; TH = through movements; RT = right-turning movements.

APPENDIX

PROJECT SITE PLAN
AUTOMATIC TRAFFIC RECORDER COUNT DATA
TURNING MOVEMENT COUNT DATA
SEASONAL ADJUSTMENT DATA
COVID ADJUSTMENT DATA
PUBLIC TRANSPORTATION SCHEDULES
VEHICLE TRAVEL SPEED DATA
MASSDOT CRASH RATE WORKSHEETS AND HIGH CRASH LOCATION MAP
GENERAL BACKGROUND TRAFFIC GROWTH
BACKGROUND DEVELOPMENT TRAFFIC-VOLUME NETWORKS
TRIP-GENERATION CALCULATIONS
FORMER PROJECT SITE USE TRIP-GENERATION CALCULATIONS
DRIVE-THROUGH CALCULATIONS
CAPACITY ANALYSIS WORKSHEETS

PROJECT SITE PLAN

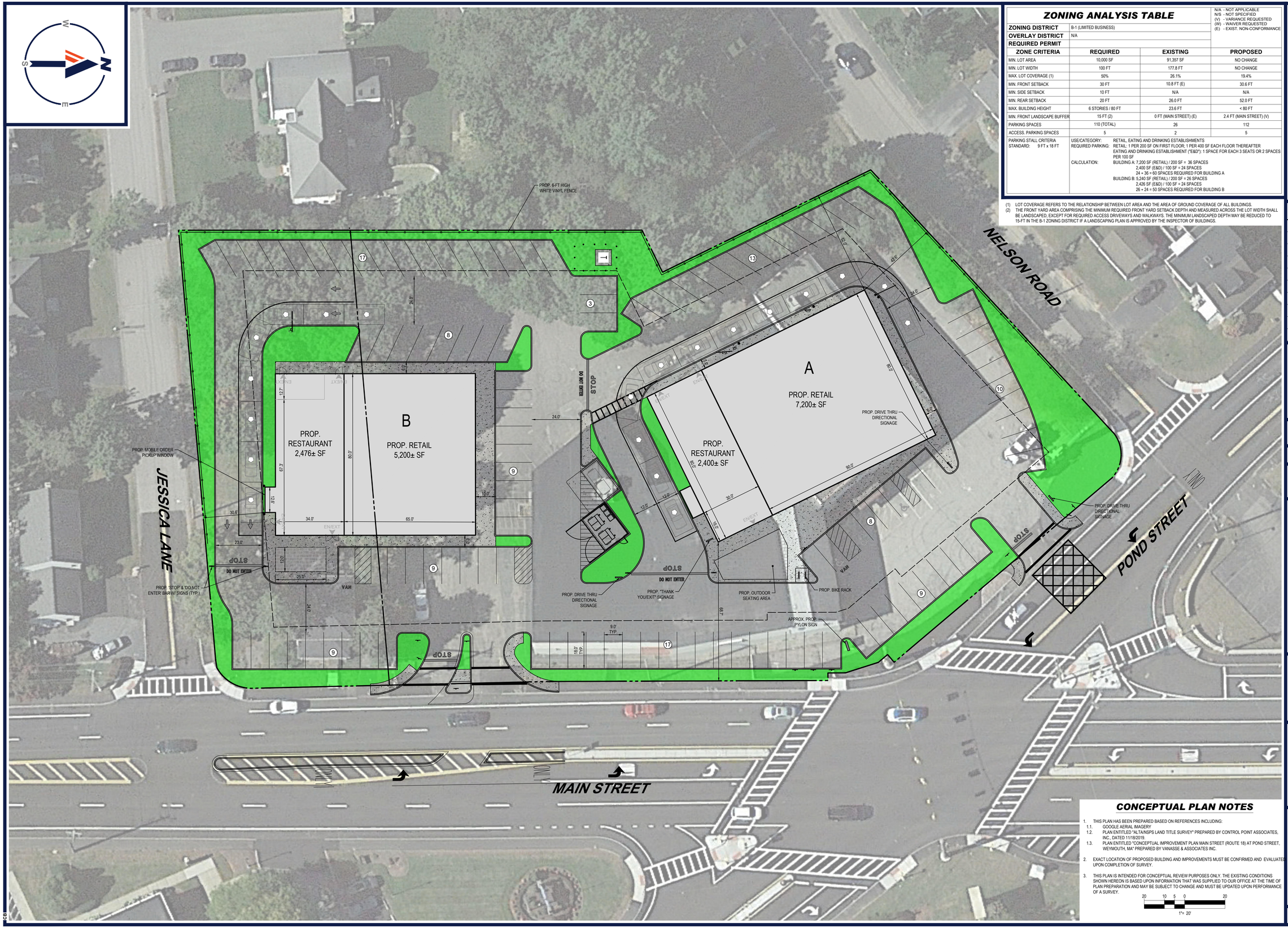

ZONING ANALYSIS TABLE

N/A - NOT APPLICABLE
N/S - NOT SPECIFIED
(V) - VARIANCE REQUESTED
(W) - WAIVER REQUESTED
(E) - EXIST. NON-CONFORMANCE

ZONING DISTRICT	B-1 (LIMITED BUSINESS)		
OVERLAY DISTRICT	N/A		
REQUIRED PERMIT			
ZONE CRITERIA	**REQUIRED**	**EXISTING**	**PROPOSED**
MIN. LOT AREA	10,000 SF	91,357 SF	NO CHANGE
MIN. LOT WIDTH	100 FT	177.8 FT	NO CHANGE
MAX. LOT COVERAGE (1)	50%	26.1%	19.4%
MIN. FRONT SETBACK	30 FT	10.8 FT (E)	30.6 FT
MIN. SIDE SETBACK	10 FT	N/A	N/A
MIN. REAR SETBACK	20 FT	26.0 FT	52.0 FT
MAX. BUILDING HEIGHT	6 STORIES / 80 FT	23.6 FT	< 80 FT
MIN. FRONT LANDSCAPE BUFFER	15 FT (2)	0 FT (MAIN STREET) (E)	2.4 FT (MAIN STREET) (V)
PARKING SPACES	110 (TOTAL)	26	112
ACCESS. PARKING SPACES	5	2	5

PARKING STALL CRITERIA STANDARD: 9 FT x 18 FT

USE/CATEGORY: RETAIL, EATING AND DRINKING ESTABLISHMENTS
REQUIRED PARKING: RETAIL: 1 PER 200 SF ON FIRST FLOOR; 1 PER 400 SF EACH FLOOR THEREAFTER
EATING AND DRINKING ESTABLISHMENT ("E&D"): 1 SPACE FOR EACH 3 SEATS OR 2 SPACES PER 100 SF
CALCULATION:
BUILDING A: 7,200 SF (RETAIL) / 200 SF = 36 SPACES
2,400 SF (E&D) / 100 SF = 24 SPACES
24 + 36 = 60 SPACES REQUIRED FOR BUILDING A
BUILDING B: 5,240 SF (RETAIL) / 200 SF = 26 SPACES
2,426 SF (E&D) / 100 SF = 24 SPACES
26 + 24 = 50 SPACES REQUIRED FOR BUILDING B

(1) LOT COVERAGE REFERS TO THE RELATIONSHIP BETWEEN LOT AREA AND THE AREA OF GROUND COVERAGE OF ALL BUILDINGS.
(2) THE FRONT YARD AREA COMPRISING THE MINIMUM REQUIRED FRONT YARD SETBACK DEPTH AND MEASURED ACROSS THE LOT WIDTH SHALL BE LANDSCAPED, EXCEPT FOR REQUIRED ACCESS DRIVEWAYS AND WALKWAYS. THE MINIMUM LANDSCAPED DEPTH MAY BE REDUCED TO 15-FT IN THE B-1 ZONING DISTRICT IF A LANDSCAPING PLAN IS APPROVED BY THE INSPECTOR OF BUILDINGS.

CONCEPTUAL PLAN NOTES

1. THIS PLAN HAS BEEN PREPARED BASED ON REFERENCES INCLUDING:
   1.1. GOOGLE AERIAL IMAGERY
   1.2. PLAN ENTITLED "ALTA/NSPS LAND TITLE SURVEY" PREPARED BY CONTROL POINT ASSOCIATES, INC., DATED 11/18/2019.
   1.3. PLAN ENTITLED "CONCEPTUAL IMPROVEMENT PLAN MAIN STREET (ROUTE 18) AT POND STREET, WEYMOUTH, MA" PREPARED BY VANASSE & ASSOCIATES INC.
2. EXACT LOCATION OF PROPOSED BUILDING AND IMPROVEMENTS MUST BE CONFIRMED AND EVALUATED UPON COMPLETION OF SURVEY.
3. THIS PLAN IS INTENDED FOR CONCEPTUAL REVIEW PURPOSES ONLY. THE EXISTING CONDITIONS SHOWN HEREON IS BASED UPON INFORMATION THAT WAS SUPPLIED TO OUR OFFICE AT THE TIME OF PLAN PREPARATION AND MAY BE SUBJECT TO CHANGE AND MUST BE UPDATED UPON PERFORMANCE OF A SURVEY.

20 10 5 0 20
1"= 20'

BOHLER™

SITE CIVIL AND CONSULTING ENGINEERING
LAND SURVEYING
PROGRAM MANAGEMENT
LANDSCAPE ARCHITECTURE
SUSTAINABLE DESIGN
PERMITTING SERVICES
TRANSPORTATION SERVICES

THE INFORMATION, DESIGN AND CONTENT OF THIS PLAN AND ITS ATTACHMENTS, WHETHER IN PRINT OR ELECTRONIC FORMAT, IS PROPRIETARY AND CONFIDENTIAL. IT MAY NOT BE COPIED OR USED FOR ANY PURPOSE WITHOUT THE PRIOR WRITTEN AUTHORIZATION FROM BOHLER. ONLY APPROVED, SIGNED AND SEALED PLANS SHALL BE UTILIZED FOR CONSTRUCTION PURPOSES.
© BOHLER

REVISIONS

REV	DATE	COMMENT	DRAWN BY / CHECKED BY

811 Know what's below. Call before you dig.
ALWAYS CALL 811
It's fast. It's free. It's the law.

FOR CONCEPT PURPOSES ONLY

THIS DRAWING IS INTENDED FOR MUNICIPAL AND/OR AGENCY REVIEW AND APPROVAL. IT IS NOT INTENDED AS A CONSTRUCTION DOCUMENT UNLESS INDICATED OTHERWISE.

PROJECT No.:	MAA220242.00
DRAWN BY:	CPB
CHECKED BY:	LMD
DATE:	01/19/2023
CAD I.D.:	MAA220242.00-CNPT-4B

PROJECT:

PROPOSED CONCEPT PLAN

FOR

FX HARBORLIGHT, LLC

PROPOSED DEVELOPMENT

MAP: 61 BLOCK: 639 LOTS: 4 & 7
505 POND STREET,
CITY OF WEYMOUTH,
NORFOLK COUNTY,
MASSACHUSETTS

BOHLER
352 TURNPIKE ROAD
SOUTHBOROUGH, MA 01772
Phone: (508) 480-9900
www.BohlerEngineering.com

DRAFT: 1/19/23

SHEET TITLE:

CONCEPTUAL LAYOUT PLAN WITH AERIAL

SHEET NUMBER:

CA-02

ORG. DATE - 01/19/2023

P:\2022\MAA220242.00\CAD\DRAWINGS\CONCEPTS\CONCEPT PLANS\MAA220242.00-CNPT-4B----->LAYOUT: CA-02-AERIAL

AUTOMATIC TRAFFIC RECORDER COUNT DATA

Accurate Counts
978-664-2565

Location : Main Street (Route 18)
Location : North of Jessica Lane
City/State: Weymouth, MA

8426VOL1

Start	11/21/201	NB		Hour Totals		SB		Hour Totals		Combined Totals	
Time	Thu	Morning	Afternoon	Morning	Afternoon	Morning	Afternoon	Morning	Afternoon	Morning	Afternoon
12:00		21	121			10	118				
12:15		20	148			5	140				
12:30		21	133			6	134				
12:45		13	135	75	537	6	136	27	528	102	1065
01:00		13	136			8	115				
01:15		10	109			3	152				
01:30		4	156			5	139				
01:45		8	152	35	553	3	130	19	536	54	1089
02:00		5	133			5	139				
02:15		4	160			5	156				
02:30		4	163			6	142				
02:45		4	168	17	624	4	124	20	561	37	1185
03:00		8	168			8	140				
03:15		5	165			15	120				
03:30		6	183			16	161				
03:45		9	202	28	718	19	128	58	549	86	1267
04:00		9	213			34	153				
04:15		12	195			39	177				
04:30		6	211			68	177				
04:45		20	213	47	832	97	145	238	652	285	1484
05:00		21	215			140	180				
05:15		25	209			142	156				
05:30		26	165			112	132				
05:45		40	178	112	767	168	148	562	616	674	1383
06:00		53	199			144	133				
06:15		67	167			174	129				
06:30		69	170			206	160				
06:45		86	172	275	708	186	125	710	547	985	1255
07:00		100	139			176	108				
07:15		127	146			216	93				
07:30		153	140			190	99				
07:45		146	125	526	550	205	102	787	402	1313	952
08:00		115	153			180	102				
08:15		113	118			175	80				
08:30		117	94			164	69				
08:45		92	102	437	467	141	73	660	324	1097	791
09:00		101	91			149	82				
09:15		126	68			138	72				
09:30		113	74			154	46				
09:45		97	67	437	300	136	55	577	255	1014	555
10:00		99	65			129	38				
10:15		78	57			115	52				
10:30		99	63			135	43				
10:45		124	59	400	244	110	48	489	181	889	425
11:00		117	37			140	19				
11:15		112	43			135	22				
11:30		117	65			127	25				
11:45		143	29	489	174	120	12	522	78	1011	252
Total		2878	6474			4669	5229			7547	11703
Percent		30.8%	69.2%			47.2%	52.8%			39.2%	60.8%

Accurate Counts
978-664-2565

Location : Main Street (Route 18)
Location : North of Jessica Lane
City/State: Weymouth, MA

8426VOL1

Start	11/22/201	NB		Hour Totals		SB		Hour Totals		Combined Totals	
Time	Fri	Morning	Afternoon	Morning	Afternoon	Morning	Afternoon	Morning	Afternoon	Morning	Afternoon
12:00		33	138			12	122				
12:15		14	150			14	149				
12:30		15	165			7	162				
12:45		11	164	73	617	8	132	41	565	114	1182
01:00		12	168			6	145				
01:15		19	154			9	163				
01:30		7	155			4	159				
01:45		15	167	53	644	4	151	23	618	76	1262
02:00		8	151			2	145				
02:15		7	179			6	144				
02:30		4	156			3	178				
02:45		3	179	22	665	5	144	16	611	38	1276
03:00		4	192			6	140				
03:15		8	195			11	136				
03:30		5	197			14	155				
03:45		7	210	24	794	14	142	45	573	69	1367
04:00		7	225			33	148				
04:15		2	209			46	173				
04:30		7	197			82	167				
04:45		11	186	27	817	94	160	255	648	282	1465
05:00		17	206			142	143				
05:15		24	192			122	161				
05:30		27	202			142	171				
05:45		37	222	105	822	152	170	558	645	663	1467
06:00		45	164			150	137				
06:15		59	186			184	152				
06:30		67	188			209	170				
06:45		92	171	263	709	188	127	731	586	994	1295
07:00		103	169			172	133				
07:15		125	159			205	109				
07:30		126	156			190	104				
07:45		118	138	472	622	193	103	760	449	1232	1071
08:00		104	134			154	93				
08:15		117	105			157	88				
08:30		107	101			166	85				
08:45		120	80	448	420	163	60	640	326	1088	746
09:00		136	73			145	91				
09:15		148	82			156	67				
09:30		123	71			167	60				
09:45		112	68	519	294	165	65	633	283	1152	577
10:00		108	80			123	62				
10:15		129	65			161	60				
10:30		144	83			144	68				
10:45		100	54	481	282	186	70	614	260	1095	542
11:00		124	54			144	42				
11:15		132	67			177	42				
11:30		154	68			131	16				
11:45		120	45	530	234	142	24	594	124	1124	358
Total		3017	6920			4910	5688			7927	12608
Percent		30.4%	69.6%			46.3%	53.7%			38.6%	61.4%

Accurate Counts
978-664-2565

Location : Main Street (Route 18)
Location : North of Jessica Lane
City/State: Weymouth, MA

8426VOL1

Start Time	11/23/201 Sat	NB Morning	NB Afternoon	Hour Totals Morning	Hour Totals Afternoon	SB Morning	SB Afternoon	Hour Totals Morning	Hour Totals Afternoon	Combined Totals Morning	Combined Totals Afternoon
12:00		36	214			23	186				
12:15		31	192			20	200				
12:30		35	205			15	204				
12:45		18	209	120	820	13	207	71	797	191	1617
01:00		14	185			12	192				
01:15		17	174			13	195				
01:30		22	180			12	171				
01:45		13	193	66	732	10	182	47	740	113	1472
02:00		8	190			8	183				
02:15		10	178			8	204				
02:30		13	182			7	211				
02:45		4	174	35	724	10	187	33	785	68	1509
03:00		11	179			5	198				
03:15		9	185			10	189				
03:30		7	232			13	179				
03:45		3	215	30	811	10	177	38	743	68	1554
04:00		9	183			19	132				
04:15		7	180			33	182				
04:30		4	181			26	182				
04:45		15	184	35	728	35	180	113	676	148	1404
05:00		11	165			40	177				
05:15		10	176			49	176				
05:30		13	168			74	177				
05:45		20	188	54	697	65	154	228	684	282	1381
06:00		21	170			59	183				
06:15		38	141			97	156				
06:30		52	98			117	141				
06:45		47	128	158	537	127	127	400	607	558	1144
07:00		55	142			99	112				
07:15		71	120			111	112				
07:30		111	135			135	93				
07:45		110	101	347	498	115	103	460	420	807	918
08:00		87	111			158	76				
08:15		101	77			139	90				
08:30		118	89			169	101				
08:45		110	84	416	361	150	73	616	340	1032	701
09:00		113	70			166	71				
09:15		128	78			176	87				
09:30		134	75			168	82				
09:45		160	74	535	297	175	63	685	303	1220	600
10:00		166	63			193	62				
10:15		187	52			182	45				
10:30		185	74			184	70				
10:45		153	48	691	237	204	63	763	240	1454	477
11:00		174	55			198	51				
11:15		193	56			204	54				
11:30		195	76			209	42				
11:45		173	48	735	235	204	33	815	180	1550	415
Total		3222	6677			4269	6515			7491	13192
Percent		32.5%	67.5%			39.6%	60.4%			36.2%	63.8%
Grand Total		9117	20071			13848	17432			22965	37503
Percent		31.2%	68.8%			44.3%	55.7%			38.0%	62.0%

ADT ADT 20,156 AADT 20,156

Accurate Counts
978-664-2565

Location : Main Street (Route 18)
Location : North of Jessica Lane
City/State: Weymouth, MA

8426VOL1

Start	11/18/2019		Tue		Wed		Thu		Fri		Sat		Sun		Week Average	
Time	NB	SB	NB	SB	NB	SB	NB	SB	NB	SB	NB	SB	NB	SB	NB	SB
12:00 AM	*	*	*	*	*	*	75	27	73	41	120	71	*	*	89	46
01:00	*	*	*	*	*	*	35	19	53	23	66	47	*	*	51	30
02:00	*	*	*	*	*	*	17	20	22	16	35	33	*	*	25	23
03:00	*	*	*	*	*	*	28	58	24	45	30	38	*	*	27	47
04:00	*	*	*	*	*	*	47	238	27	255	35	113	*	*	36	202
05:00	*	*	*	*	*	*	112	562	105	558	54	228	*	*	90	449
06:00	*	*	*	*	*	*	275	710	263	731	158	400	*	*	232	614
07:00	*	*	*	*	*	*	**526**	**787**	472	**760**	347	460	*	*	448	**669**
08:00	*	*	*	*	*	*	437	660	448	640	416	616	*	*	434	639
09:00	*	*	*	*	*	*	437	577	519	633	535	685	*	*	497	632
10:00	*	*	*	*	*	*	400	489	481	614	691	763	*	*	524	622
11:00	*	*	*	*	*	*	489	522	**530**	594	**735**	**815**	*	*	**585**	644
12:00 PM	*	*	*	*	*	*	537	528	617	565	**820**	**797**	*	*	658	630
01:00	*	*	*	*	*	*	553	536	644	618	732	740	*	*	643	631
02:00	*	*	*	*	*	*	624	561	665	611	724	785	*	*	671	652
03:00	*	*	*	*	*	*	718	549	794	573	811	743	*	*	774	622
04:00	*	*	*	*	*	*	**832**	**652**	817	**648**	728	676	*	*	**792**	**659**
05:00	*	*	*	*	*	*	767	616	**822**	645	697	684	*	*	762	648
06:00	*	*	*	*	*	*	708	547	709	586	537	607	*	*	651	580
07:00	*	*	*	*	*	*	550	402	622	449	498	420	*	*	557	424
08:00	*	*	*	*	*	*	467	324	420	326	361	340	*	*	416	330
09:00	*	*	*	*	*	*	300	255	294	283	297	303	*	*	297	280
10:00	*	*	*	*	*	*	244	181	282	260	237	240	*	*	254	227
11:00	*	*	*	*	*	*	174	78	234	124	235	180	*	*	214	127
Lane	0	0	0	0	0	0	9352	9898	9937	10598	9899	10784	0	0	9727	10427
Day	0		0		0		19250		20535		20683		0		20154	
AM Peak	-	-	-	-	-	-	07:00	07:00	11:00	07:00	11:00	11:00	-	-	11:00	07:00
Vol.	-	-	-	-	-	-	526	787	530	760	735	815	-	-	585	669
PM Peak	-	-	-	-	-	-	16:00	16:00	17:00	16:00	12:00	12:00	-	-	16:00	16:00
Vol.	-	-	-	-	-	-	832	652	822	648	820	797	-	-	792	659

Comb. Total	0	0	0	19250	20535	20683	0	20154

ADT	ADT 20,156	AADT 20,156

Accurate Counts
978-664-2565

Location : Pond Street
Location : West of Nelson Road
City/State: Weymouth, MA

8426VOL2

Start	11/21/201	WB		Hour Totals		EB		Hour Totals		Combined Totals	
Time	Thu	Morning	Afternoon	Morning	Afternoon	Morning	Afternoon	Morning	Afternoon	Morning	Afternoon
12:00		1	37			6	76				
12:15		4	30			4	71				
12:30		1	39			3	83				
12:45		3	46	9	152	1	55	14	285	23	437
01:00		1	43			2	73				
01:15		2	50			2	67				
01:30		0	38			5	85				
01:45		0	54	3	185	3	81	12	306	15	491
02:00		2	36			1	84				
02:15		0	48			1	90				
02:30		1	43			1	93				
02:45		2	36	5	163	4	99	7	366	12	529
03:00		1	44			0	76				
03:15		1	44			0	84				
03:30		1	54			3	119				
03:45		0	42	3	184	4	108	7	387	10	571
04:00		4	46			2	102				
04:15		1	33			3	72				
04:30		10	34			2	90				
04:45		14	42	29	155	2	94	9	358	38	513
05:00		13	53			12	94				
05:15		17	50			8	92				
05:30		19	51			9	76				
05:45		25	26	74	180	21	57	50	319	124	499
06:00		22	39			22	75				
06:15		25	39			27	88				
06:30		49	30			48	74				
06:45		60	24	156	132	41	86	138	323	294	455
07:00		44	33			37	72				
07:15		48	23			66	59				
07:30		54	12			59	52				
07:45		61	27	207	95	76	32	238	215	445	310
08:00		54	19			56	57				
08:15		36	14			44	41				
08:30		43	17			67	45				
08:45		32	16	165	66	46	33	213	176	378	242
09:00		47	23			55	31				
09:15		48	15			65	18				
09:30		49	14			52	27				
09:45		53	13	197	65	55	15	227	91	424	156
10:00		38	10			62	23				
10:15		35	6			52	13				
10:30		60	2			55	15				
10:45		50	7	183	25	60	13	229	64	412	89
11:00		35	5			60	16				
11:15		37	2			61	9				
11:30		37	8			62	13				
11:45		41	0	150	15	70	4	253	42	403	57
Total		1181	1417			1397	2932			2578	4349
Percent		45.5%	54.5%			32.3%	67.7%			37.2%	62.8%

Accurate Counts
978-664-2565

Location : Pond Street
Location : West of Nelson Road
City/State: Weymouth, MA

8426VOL2

Start	11/22/201	WB		Hour Totals		EB		Hour Totals		Combined Totals	
Time	Fri	Morning	Afternoon	Morning	Afternoon	Morning	Afternoon	Morning	Afternoon	Morning	Afternoon
12:00		2	29			7	64				
12:15		0	31			1	76				
12:30		2	31			4	69				
12:45		2	26	6	117	4	55	16	264	22	381
01:00		0	30			3	72				
01:15		1	29			2	77				
01:30		1	35			1	71				
01:45		1	35	3	129	3	75	9	295	12	424
02:00		0	26			0	84				
02:15		1	39			2	88				
02:30		0	35			2	74				
02:45		0	25	1	125	2	100	6	346	7	471
03:00		2	31			0	103				
03:15		2	34			0	82				
03:30		0	32			1	86				
03:45		0	28	4	125	2	104	3	375	7	500
04:00		4	44			2	81				
04:15		1	30			1	85				
04:30		6	31			3	98				
04:45		11	38	22	143	5	96	11	360	33	503
05:00		17	30			2	73				
05:15		12	42			8	67				
05:30		15	43			17	70				
05:45		23	34	67	149	15	99	42	309	109	458
06:00		23	22			21	76				
06:15		38	38			24	70				
06:30		46	38			49	64				
06:45		67	26	174	124	31	76	125	286	299	410
07:00		51	26			41	62				
07:15		58	27			52	59				
07:30		58	33			58	51				
07:45		62	22	229	108	68	40	219	212	448	320
08:00		44	26			53	47				
08:15		53	14			45	41				
08:30		48	21			60	29				
08:45		40	17	185	78	67	28	225	145	410	223
09:00		46	18			52	25				
09:15		33	16			51	24				
09:30		39	13			35	20				
09:45		32	11	150	58	44	16	182	85	332	143
10:00		38	13			42	24				
10:15		41	7			45	26				
10:30		32	10			61	27				
10:45		52	5	163	35	46	19	194	96	357	131
11:00		28	9			43	19				
11:15		40	5			62	11				
11:30		27	10			73	14				
11:45		39	2	134	26	57	23	235	67	369	93
Total		1138	1217			1267	2840			2405	4057
Percent		48.3%	51.7%			30.8%	69.2%			37.2%	62.8%

Accurate Counts
978-664-2565

Location : Pond Street
Location : West of Nelson Road
City/State: Weymouth, MA

8426VOL2

Start Time	11/23/201 Sat	WB Morning	WB Afternoon	Hour Totals Morning	Hour Totals Afternoon	EB Morning	EB Afternoon	Hour Totals Morning	Hour Totals Afternoon	Combined Totals Morning	Combined Totals Afternoon
12:00		7	48			15	87				
12:15		4	47			7	91				
12:30		4	41			17	93				
12:45		2	56	17	192	3	84	42	355	59	547
01:00		2	53			6	70				
01:15		3	47			9	82				
01:30		2	49			9	80				
01:45		2	41	9	190	7	68	31	300	40	490
02:00		2	47			5	76				
02:15		1	45			3	70				
02:30		1	54			4	78				
02:45		2	47	6	193	1	68	13	292	19	485
03:00		0	40			3	68				
03:15		2	38			3	68				
03:30		0	34			2	94				
03:45		0	41	2	153	1	80	9	310	11	463
04:00		1	32			0	68				
04:15		2	26			2	80				
04:30		1	39			1	64				
04:45		2	41	6	138	4	85	7	297	13	435
05:00		1	40			6	54				
05:15		7	32			9	74				
05:30		12	34			6	57				
05:45		4	30	24	136	12	70	33	255	57	391
06:00		12	36			12	64				
06:15		11	33			13	62				
06:30		22	30			27	38				
06:45		22	30	67	129	22	41	74	205	141	334
07:00		14	37			21	44				
07:15		22	20			29	41				
07:30		29	13			28	43				
07:45		21	23	86	93	33	30	111	158	197	251
08:00		23	16			48	27				
08:15		28	16			37	16				
08:30		41	24			59	32				
08:45		42	16	134	72	57	22	201	97	335	169
09:00		29	14			44	21				
09:15		44	17			56	22				
09:30		34	10			59	14				
09:45		44	12	151	53	68	17	227	74	378	127
10:00		38	18			80	26				
10:15		33	11			64	30				
10:30		50	12			81	19				
10:45		39	10	160	51	74	14	299	89	459	140
11:00		35	10			83	16				
11:15		52	12			85	18				
11:30		45	5			80	16				
11:45		57	4	189	31	79	9	327	59	516	90
Total		851	1431			1374	2491			2225	3922
Percent		37.3%	62.7%			35.5%	64.5%			36.2%	63.8%
Grand Total		3170	4065			4038	8263			7208	12328
Percent		43.8%	56.2%			32.8%	67.2%			36.9%	63.1%

ADT ADT 6,512 AADT 6,512

Accurate Counts
978-664-2565

Location : Pond Street
Location : West of Nelson Road
City/State: Weymouth, MA

8426VOL2

Start	11/18/2019		Tue		Wed		Thu		Fri		Sat		Sun		Week Average	
Time	WB	EB	WB	EB	WB	EB	WB	EB	WB	EB	WB	EB	WB	EB	WB	EB
12:00 AM	*	*	*	*	*	*	9	14	6	16	17	42	*	*	11	24
01:00	*	*	*	*	*	*	3	12	3	9	9	31	*	*	5	17
02:00	*	*	*	*	*	*	5	7	1	6	6	13	*	*	4	9
03:00	*	*	*	*	*	*	3	7	4	3	2	9	*	*	3	6
04:00	*	*	*	*	*	*	29	9	22	11	6	7	*	*	19	9
05:00	*	*	*	*	*	*	74	50	67	42	24	33	*	*	55	42
06:00	*	*	*	*	*	*	156	138	174	125	67	74	*	*	132	112
07:00	*	*	*	*	*	*	**207**	238	**229**	219	86	111	*	*	**174**	189
08:00	*	*	*	*	*	*	165	213	185	225	134	201	*	*	161	213
09:00	*	*	*	*	*	*	197	227	150	182	151	227	*	*	166	212
10:00	*	*	*	*	*	*	183	229	163	194	160	299	*	*	169	241
11:00	*	*	*	*	*	*	150	**253**	134	**235**	**189**	**327**	*	*	158	**272**
12:00 PM	*	*	*	*	*	*	152	285	117	264	192	**355**	*	*	154	301
01:00	*	*	*	*	*	*	**185**	306	129	295	190	300	*	*	**168**	300
02:00	*	*	*	*	*	*	163	366	125	346	**193**	292	*	*	160	335
03:00	*	*	*	*	*	*	184	**387**	125	**375**	153	310	*	*	154	**357**
04:00	*	*	*	*	*	*	155	358	143	360	138	297	*	*	145	338
05:00	*	*	*	*	*	*	180	319	**149**	309	136	255	*	*	155	294
06:00	*	*	*	*	*	*	132	323	124	286	129	205	*	*	128	271
07:00	*	*	*	*	*	*	95	215	108	212	93	158	*	*	99	195
08:00	*	*	*	*	*	*	66	176	78	145	72	97	*	*	72	139
09:00	*	*	*	*	*	*	65	91	58	85	53	74	*	*	59	83
10:00	*	*	*	*	*	*	25	64	35	96	51	89	*	*	37	83
11:00	*	*	*	*	*	*	15	42	26	67	31	59	*	*	24	56
Lane	0	0	0	0	0	0	2598	4329	2355	4107	2282	3865	0	0	2412	4098
Day	0		0		0		6927		6462		6147		0		6510	
AM Peak	-	-	-	-	-	-	07:00	11:00	07:00	11:00	11:00	11:00	-	-	07:00	11:00
Vol.	-	-	-	-	-	-	207	253	229	235	189	327	-	-	174	272
PM Peak	-	-	-	-	-	-	13:00	15:00	17:00	15:00	14:00	12:00	-	-	13:00	15:00
Vol.	-	-	-	-	-	-	185	387	149	375	193	355	-	-	168	357

Comb. Total	0	0	0	6927	6462	6147	0	6510

ADT	ADT 6,512	AADT 6,512

Location : Route 18 84280001
Location : at Jessica Lane
City/State: Weymouth, MA

5/5/2022	NB,		Hour Totals		SB,		Hour Totals		Combined Totals	
Time	Morning	Afternoon	Morning	Afternon	Morning	Afternoon	Morning	Afternoon	Morning	Afternoon
12:00	9	162			35	147				
12:15	7	137			26	191				
12:30	12	155			19	158				
12:45	8	126	36	580	17	172	97	668	133	1248
1:00	6	135			8	128				
1:15	6	141			14	142				
1:30	9	167			9	153				
1:45	4	154	25	597	8	143	39	566	64	1163
2:00	5	144			7	160				
2:15	6	135			7	191				
2:30	6	142			6	165				
2:45	11	140	28	561	3	168	23	684	51	1245
3:00	6	137			3	169				
3:15	14	162			8	214				
3:30	11	134			6	226				
3:45	16	160	47	593	7	221	24	830	71	1423
4:00	29	140			4	192				
4:15	38	155			13	228				
4:30	55	129			13	201				
4:45	88	140	210	564	21	230	51	851	261	1415
5:00	103	161			25	200				
5:15	117	153			21	237				
5:30	148	157			32	163				
5:45	138	146	506	617	56	206	134	806	640	1423
6:00	155	166			64	162				
6:15	188	140			58	195				
6:30	197	157			74	162				
6:45	183	152	723	615	107	143	303	662	1026	1277
7:00	163	125			107	164				
7:15	171	133			122	172				
7:30	194	130			118	154				
7:45	207	121	735	509	117	150	464	640	1199	1149
8:00	178	100			123	141				
8:15	146	106			121	137				
8:30	177	92			128	100				
8:45	174	95	675	393	137	109	509	487	1184	880
9:00	132	83			160	107				
9:15	162	66			133	111				
9:30	153	46			110	83				
9:45	134	66	581	261	126	74	529	375	1110	636
10:00	129	50			111	67				
10:15	145	56			144	67				
10:30	144	64			144	57				
10:45	149	40	567	210	136	41	535	232	1102	442
11:00	124	37			148	54				
11:15	143	29			138	56				
11:30	137	13			153	61				
11:45	142	14	546	93	134	41	573	212	1119	305
Total	4679	5593			3281	7013			7960	12606
Percent	45.6%	54.4%			31.9%	68.1%			38.7%	61.3%

Location : Route 18 84280001
Location : at Jessica Lane
City/State: Weymouth, MA

5/6/2022	NB,		Hour Totals		SB,		Hour Totals		Combined Totals	
Time	Morning	Afternoon	Morning	Afternon	Morning	Afternoon	Morning	Afternoon	Morning	Afternoon
12:00	12	126			39	133				
12:15	11	154			20	169				
12:30	10	163			20	172				
12:45	7	146	40	589	15	157	94	631	134	1220
1:00	3	136			29	177				
1:15	8	130			28	170				
1:30	9	148			18	161				
1:45	7	147	27	561	11	155	86	663	113	1224
2:00	5	119			12	178				
2:15	7	142			10	189				
2:30	8	171			7	181				
2:45	6	145	26	577	11	195	40	743	66	1320
3:00	6	141			5	192				
3:15	11	146			9	221				
3:30	13	142			14	189				
3:45	17	123	47	552	7	191	35	793	82	1345
4:00	19	155			11	194				
4:15	36	164			5	235				
4:30	57	159			16	218				
4:45	82	144	194	622	18	203	50	850	244	1472
5:00	103	125			17	188				
5:15	124	130			21	219				
5:30	119	164			41	209				
5:45	136	148	482	567	31	200	110	816	592	1383
6:00	139	142			69	176				
6:15	160	158			60	205				
6:30	186	163			70	153				
6:45	201	142	686	605	105	196	304	730	990	1335
7:00	165	147			120	156				
7:15	206	139			117	176				
7:30	181	139			135	195				
7:45	188	136	740	561	111	139	483	666	1223	1227
8:00	167	126			142	127				
8:15	186	125			135	142				
8:30	154	91			120	92				
8:45	179	112	686	454	127	119	524	480	1210	934
9:00	159	90			152	111				
9:15	153	76			147	95				
9:30	167	84			128	106				
9:45	124	76	603	326	135	101	562	413	1165	739
10:00	154	60			120	108				
10:15	166	83			135	75				
10:30	150	63			144	76				
10:45	142	48	612	254	147	51	546	310	1158	564
11:00	141	48			136	81				
11:15	145	29			146	82				
11:30	145	39			158	95				
11:45	135	41	566	157	173	61	613	319	1179	476
Total	4709	5825			3447	7414			8156	13239
Percent	44.7%	55.3%			31.7%	68.3%			38.1%	61.9%

Location : Route 18 84280001
Location : at Jessica Lane
City/State: Weymouth, MA

5/7/2022	NB,		Hour Totals		SB,		Hour Totals		Combined Totals	
Time	Morning	Afternoon	Morning	Afternon	Morning	Afternoon	Morning	Afternoon	Morning	Afternoon
12:00	36	163			54	194				
12:15	19	158			41	198				
12:30	24	155			28	172				
12:45	22	171	101	647	20	208	143	772	244	1419
1:00	19	163			32	181				
1:15	14	158			14	182				
1:30	12	154			22	162				
1:45	6	152	51	627	19	196	87	721	138	1348
2:00	10	177			10	179				
2:15	11	160			11	201				
2:30	14	176			11	177				
2:45	16	173	51	686	6	188	38	745	89	1431
3:00	9	183			11	176				
3:15	7	162			9	200				
3:30	9	149			12	171				
3:45	10	140	35	634	5	158	37	705	72	1339
4:00	18	159			5	166				
4:15	20	150			9	191				
4:30	25	157			9	155				
4:45	27	147	90	613	12	143	35	655	125	1268
5:00	42	128			7	174				
5:15	50	156			12	185				
5:30	62	150			17	146				
5:45	55	144	209	578	29	169	65	674	274	1252
6:00	73	139			27	133				
6:15	91	154			46	165				
6:30	106	151			44	145				
6:45	114	159	384	603	68	146	185	589	569	1192
7:00	86	133			62	137				
7:15	95	133			84	146				
7:30	110	115			84	134				
7:45	120	114	411	495	99	126	329	543	740	1038
8:00	108	113			96	131				
8:15	112	99			101	130				
8:30	139	102			109	107				
8:45	149	98	508	412	131	97	437	465	945	877
9:00	123	92			123	86				
9:15	146	75			166	102				
9:30	161	78			124	89				
9:45	168	81	598	326	146	73	559	350	1157	676
10:00	148	64			149	83				
10:15	175	68			158	82				
10:30	152	68			142	59				
10:45	154	64	629	264	167	63	616	287	1245	551
11:00	144	45			182	66				
11:15	138	47			179	73				
11:30	164	34			163	85				
11:45	169	32	615	158	194	43	718	267	1333	425
Total	3682	6043			3249	6773			6931	12816
Percent	37.9%	62.1%			32.4%	67.6%			35.1%	64.9%
Grand Total	13070	17461			9977	21200			23047	38661
Percent	42.8%	57.2%			32.0%	68.0%			37.3%	62.7%
ADT		ADT: 20,569		AADT: 20,569						

Location : Route 18 84280001
Location : at Jessica Lane
City/State: Weymouth, MA

5/2/2022	Monday		Tuesday		Wednesday		Thursday		Friday		Saturday		Sunday		Week Average	
Time	NB,	SB,	NB,	SB,	NB,	SB,	NB,	SB,	NB,	SB,	NB,	SB,	NB,	SB,	NB,	SB,
12:00 AM	*	*	*	*	*	*	36	97	40	94	101	143	*	*	59	111
1:00	*	*	*	*	*	*	25	39	27	86	51	87	*	*	34	71
2:00	*	*	*	*	*	*	28	23	26	40	51	38	*	*	35	34
3:00	*	*	*	*	*	*	47	24	47	35	35	37	*	*	43	32
4:00	*	*	*	*	*	*	210	51	194	50	90	35	*	*	165	45
5:00	*	*	*	*	*	*	506	134	482	110	209	65	*	*	399	103
6:00	*	*	*	*	*	*	723	303	686	304	384	185	*	*	598	264
7:00	*	*	*	*	*	*	735	464	740	483	411	329	*	*	629	425
8:00	*	*	*	*	*	*	675	509	686	524	508	437	*	*	623	490
9:00	*	*	*	*	*	*	581	529	603	562	598	559	*	*	594	550
10:00	*	*	*	*	*	*	567	535	612	546	629	616	*	*	603	566
11:00	*	*	*	*	*	*	546	573	566	613	615	718	*	*	576	635
12:00 PM	*	*	*	*	*	*	580	668	589	631	647	772	*	*	605	690
1:00	*	*	*	*	*	*	597	566	561	663	627	721	*	*	595	650
2:00	*	*	*	*	*	*	561	684	577	743	686	745	*	*	608	724
3:00	*	*	*	*	*	*	593	830	552	793	634	705	*	*	593	776
4:00	*	*	*	*	*	*	564	851	622	850	613	655	*	*	600	785
5:00	*	*	*	*	*	*	617	806	567	816	578	674	*	*	587	765
6:00	*	*	*	*	*	*	615	662	605	730	603	589	*	*	608	660
7:00	*	*	*	*	*	*	509	640	561	666	495	543	*	*	522	616
8:00	*	*	*	*	*	*	393	487	454	480	412	465	*	*	420	477
9:00	*	*	*	*	*	*	261	375	326	413	326	350	*	*	304	379
10:00	*	*	*	*	*	*	210	232	254	310	264	287	*	*	243	276
11:00	*	*	*	*	*	*	93	212	157	319	158	267	*	*	136	266
Total	0	0	0	0	0	0	10272	10294	10534	10861	9725	10022	0	0	10179	10390
Day	0		0		0		20566		21395		19747		0		20569	
AM Peak							7:00	11:00	7:00	11:00	10:00	11:00			7:00	11:00
Volume							735	573	740	613	629	718			629	635
PM Peak							5:00	4:00	4:00	4:00	2:00	12:00 PM			2:00	4:00
Volume							617	851	622	850	686	772			608	785
Comb Total	0		0		0		20566		21395		19747		0		20569	
ADT	ADT: 20,569		AADT: 20,569													

MANUAL TURNING MOVEMENT COUNT DATA

Accurate Counts

978-664-2565

N/S Street : Route 18
E/W Street: Pond Street
City/State : Weymouth, MA
Weather : Clear

File Name : 84260001
Site Code : 84260001
Start Date : 11/21/2019
Page No : 1

Groups Printed- Cars - Trucks

	Route 18 From North			Pond St From East			Route 18 From South			Pond St From West			
Start Time	Left	Thru	Right	Left	Thru	Right	Left	Thru	Right	Left	Thru	Right	Int. Total
07:00 AM	31	81	21	3	40	83	32	152	1	13	15	16	488
07:15 AM	28	106	13	1	46	84	33	178	0	10	21	32	552
07:30 AM	27	149	20	1	49	100	27	178	3	22	21	18	615
07:45 AM	38	123	20	2	64	94	29	174	2	24	25	19	614
Total	124	459	74	7	199	361	121	682	6	69	82	85	2269
08:00 AM	45	110	16	1	56	110	30	151	5	22	25	27	598
08:15 AM	31	88	22	5	36	75	19	155	3	8	16	25	483
08:30 AM	32	99	14	1	33	67	15	146	4	10	25	20	466
08:45 AM	23	74	12	0	31	74	22	116	4	6	29	19	410
Total	131	371	64	7	156	326	86	568	16	46	95	91	1957
Grand Total	255	830	138	14	355	687	207	1250	22	115	177	176	4226
Apprch %	20.9	67.9	11.3	1.3	33.6	65.1	14	84.5	1.5	24.6	37.8	37.6	
Total %	6	19.6	3.3	0.3	8.4	16.3	4.9	29.6	0.5	2.7	4.2	4.2	
Cars	250	811	137	14	352	683	207	1220	19	112	177	174	4156
% Cars	98	97.7	99.3	100	99.2	99.4	100	97.6	86.4	97.4	100	98.9	98.3
Trucks	5	19	1	0	3	4	0	30	3	3	0	2	70
% Trucks	2	2.3	0.7	0	0.8	0.6	0	2.4	13.6	2.6	0	1.1	1.7

Accurate Counts

978-664-2565

N/S Street : Route 18
E/W Street: Pond Street
City/State : Weymouth, MA
Weather : Clear

File Name : 84260001
Site Code : 84260001
Start Date : 11/21/2019
Page No : 2

	Route 18 From North				Pond St From East				Route 18 From South				Pond St From West				
Start Time	Left	Thru	Right	App. Total	Left	Thru	Right	App. Total	Left	Thru	Right	App. Total	Left	Thru	Right	App. Total	Int. Total
Peak Hour Analysis From 07:00 AM to 08:45 AM - Peak 1 of 1																	
Peak Hour for Entire Intersection Begins at 07:15 AM																	
07:15 AM	28	106	13	147	1	46	84	131	**33**	**178**	0	**211**	10	21	**32**	63	552
07:30 AM	27	**149**	**20**	**196**	1	49	100	150	27	178	3	208	22	21	18	61	**615**
07:45 AM	38	123	20	181	**2**	**64**	94	160	29	174	2	205	**24**	**25**	19	68	614
08:00 AM	**45**	110	16	171	1	56	**110**	**167**	30	151	**5**	186	22	25	27	**74**	598
Total Volume	138	488	69	695	5	215	388	608	119	681	10	810	78	92	96	266	2379
% App. Total	19.9	70.2	9.9		0.8	35.4	63.8		14.7	84.1	1.2		29.3	34.6	36.1		
PHF	.767	.819	.863	.886	.625	.840	.882	.910	.902	.956	.500	.960	.813	.920	.750	.899	.967
Cars	137	480	68	685	5	214	387	606	119	668	8	795	77	92	94	263	2349
% Cars	99.3	98.4	98.6	98.6	100	99.5	99.7	99.7	100	98.1	80.0	98.1	98.7	100	97.9	98.9	98.7
Trucks	1	8	1	10	0	1	1	2	0	13	2	15	1	0	2	3	30
% Trucks	0.7	1.6	1.4	1.4	0	0.5	0.3	0.3	0	1.9	20.0	1.9	1.3	0	2.1	1.1	1.3

Accurate Counts

978-664-2565

N/S Street : Route 18
E/W Street: Pond Street
City/State : Weymouth, MA
Weather : Clear

File Name : 84260001
Site Code : 84260001
Start Date : 11/21/2019
Page No : 3

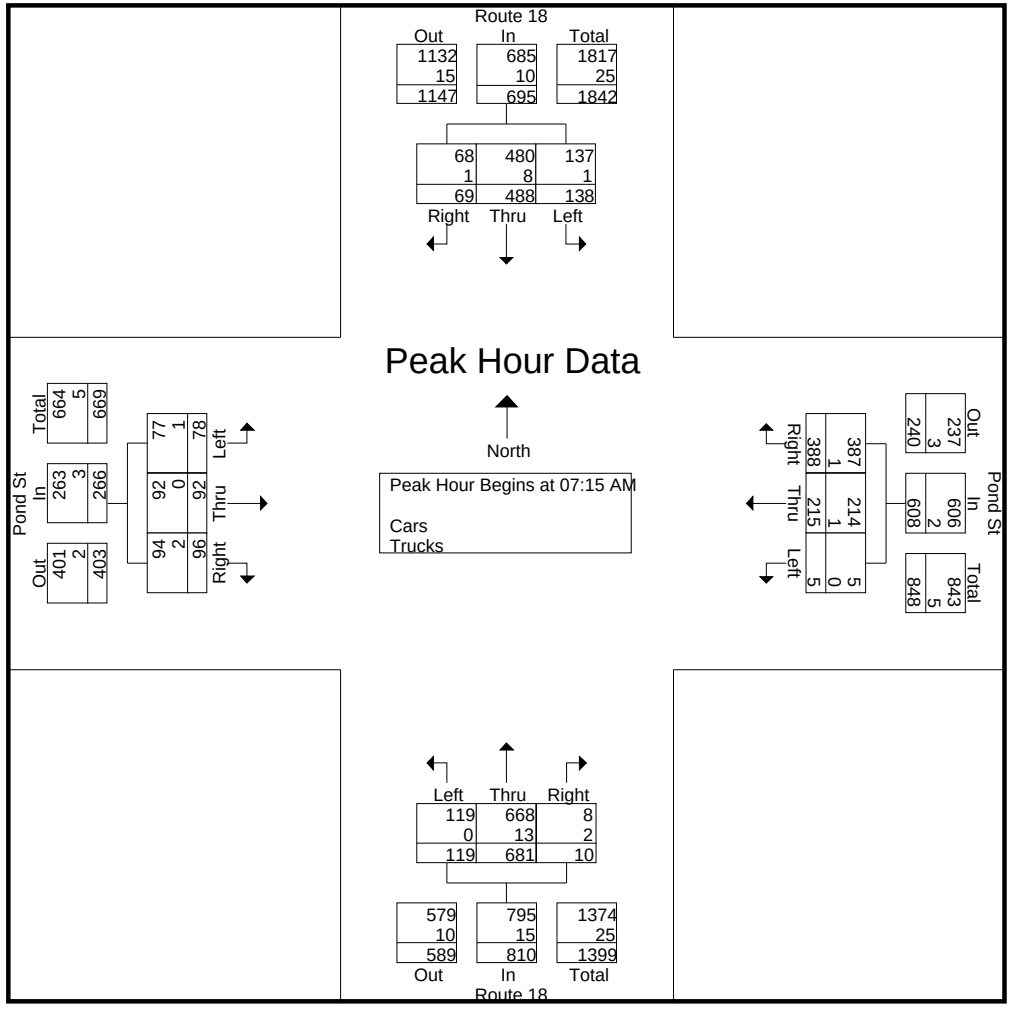

Peak Hour Analysis From 07:00 AM to 08:45 AM - Peak 1 of 1

Peak Hour for Each Approach Begins at:

	07:15 AM				07:15 AM				07:15 AM				07:15 AM			
+0 mins.	28	106	13	147	1	46	84	131	**33**	**178**	0	**211**	10	21	**32**	63
+15 mins.	27	**149**	**20**	**196**	1	49	100	150	27	178	3	208	22	21	18	61
+30 mins.	38	123	20	181	**2**	**64**	94	160	29	174	2	205	**24**	**25**	19	68
+45 mins.	**45**	110	16	171	1	56	**110**	**167**	30	151	**5**	186	22	25	27	**74**
Total Volume	138	488	69	695	5	215	388	608	119	681	10	810	78	92	96	266

Accurate Counts

978-664-2565

% App. Total	19.9	70.2	9.9		0.8	35.4	63.8		14.7	84.1	1.2		29.3	34.6	36.1	
PHF	.767	.819	.863	.886	.625	.840	.882	.910	.902	.956	.500	.960	.813	.920	.750	.899
Cars	137	480	68	685	5	214	387	606	119	668	8	795	77	92	94	263
% Cars	99.3	98.4	98.6	98.6	100	99.5	99.7	99.7	100	98.1	80	98.1	98.7	100	97.9	98.9
Trucks	1	8	1	10	0	1	1	2	0	13	2	15	1	0	2	3
% Trucks	0.7	1.6	1.4	1.4	0	0.5	0.3	0.3	0	1.9	20	1.9	1.3	0	2.1	1.1

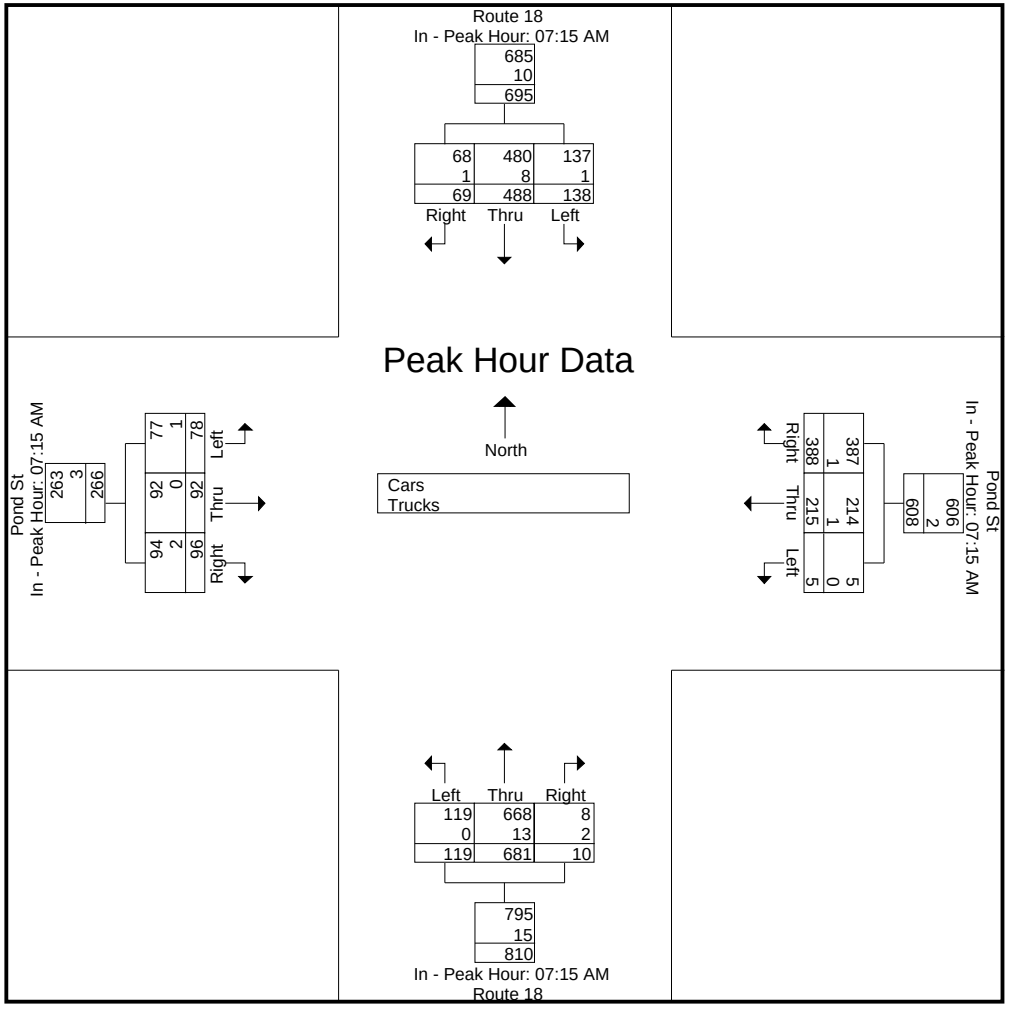

Accurate Counts

978-664-2565

N/S Street : Route 18
E/W Street: Pond Street
City/State : Weymouth, MA
Weather : Clear

File Name : 84260001
Site Code : 84260001
Start Date : 11/21/2019
Page No : 5

Groups Printed- Cars

	Route 18 From North			Pond St From East			Route 18 From South			Pond St From West			
Start Time	Left	Thru	Right	Left	Thru	Right	Left	Thru	Right	Left	Thru	Right	Int. Total
07:00 AM	29	80	21	3	39	83	32	144	1	13	15	16	476
07:15 AM	28	104	13	1	46	83	33	172	0	10	21	31	542
07:30 AM	27	145	19	1	49	100	27	177	3	22	21	18	609
07:45 AM	37	122	20	2	64	94	29	170	2	23	25	19	607
Total	121	451	73	7	198	360	121	663	6	68	82	84	2234
08:00 AM	45	109	16	1	55	110	30	149	3	22	25	26	591
08:15 AM	30	82	22	5	36	75	19	150	2	8	16	25	470
08:30 AM	31	96	14	1	32	64	15	144	4	8	25	20	454
08:45 AM	23	73	12	0	31	74	22	114	4	6	29	19	407
Total	129	360	64	7	154	323	86	557	13	44	95	90	1922
Grand Total	250	811	137	14	352	683	207	1220	19	112	177	174	4156
Apprch %	20.9	67.7	11.4	1.3	33.6	65.1	14.3	84.4	1.3	24.2	38.2	37.6	
Total %	6	19.5	3.3	0.3	8.5	16.4	5	29.4	0.5	2.7	4.3	4.2	

Accurate Counts

978-664-2565

N/S Street : Route 18
E/W Street: Pond Street
City/State : Weymouth, MA
Weather : Clear

File Name : 84260001
Site Code : 84260001
Start Date : 11/21/2019
Page No : 6

	Route 18 From North				Pond St From East				Route 18 From South				Pond St From West				
Start Time	Left	Thru	Right	App. Total	Left	Thru	Right	App. Total	Left	Thru	Right	App. Total	Left	Thru	Right	App. Total	Int. Total
Peak Hour Analysis From 07:00 AM to 08:45 AM - Peak 1 of 1																	
Peak Hour for Entire Intersection Begins at 07:15 AM																	
07:15 AM	28	104	13	145	1	46	83	130	**33**	172	0	205	10	21	**31**	62	542
07:30 AM	27	**145**	19	**191**	1	49	100	150	27	**177**	**3**	**207**	22	21	18	61	**609**
07:45 AM	37	122	**20**	179	**2**	**64**	94	160	29	170	2	201	**23**	**25**	19	67	607
08:00 AM	**45**	109	16	170	1	55	**110**	**166**	30	149	3	182	22	25	26	**73**	591
Total Volume	137	480	68	685	5	214	387	606	119	668	8	795	77	92	94	263	2349
% App. Total	20	70.1	9.9		0.8	35.3	63.9		15	84	1		29.3	35	35.7		
PHF	.761	.828	.850	.897	.625	.836	.880	.913	.902	.944	.667	.960	.837	.920	.758	.901	.964

Accurate Counts

978-664-2565

N/S Street : Route 18
E/W Street: Pond Street
City/State : Weymouth, MA
Weather : Clear

File Name : 84260001
Site Code : 84260001
Start Date : 11/21/2019
Page No : 7

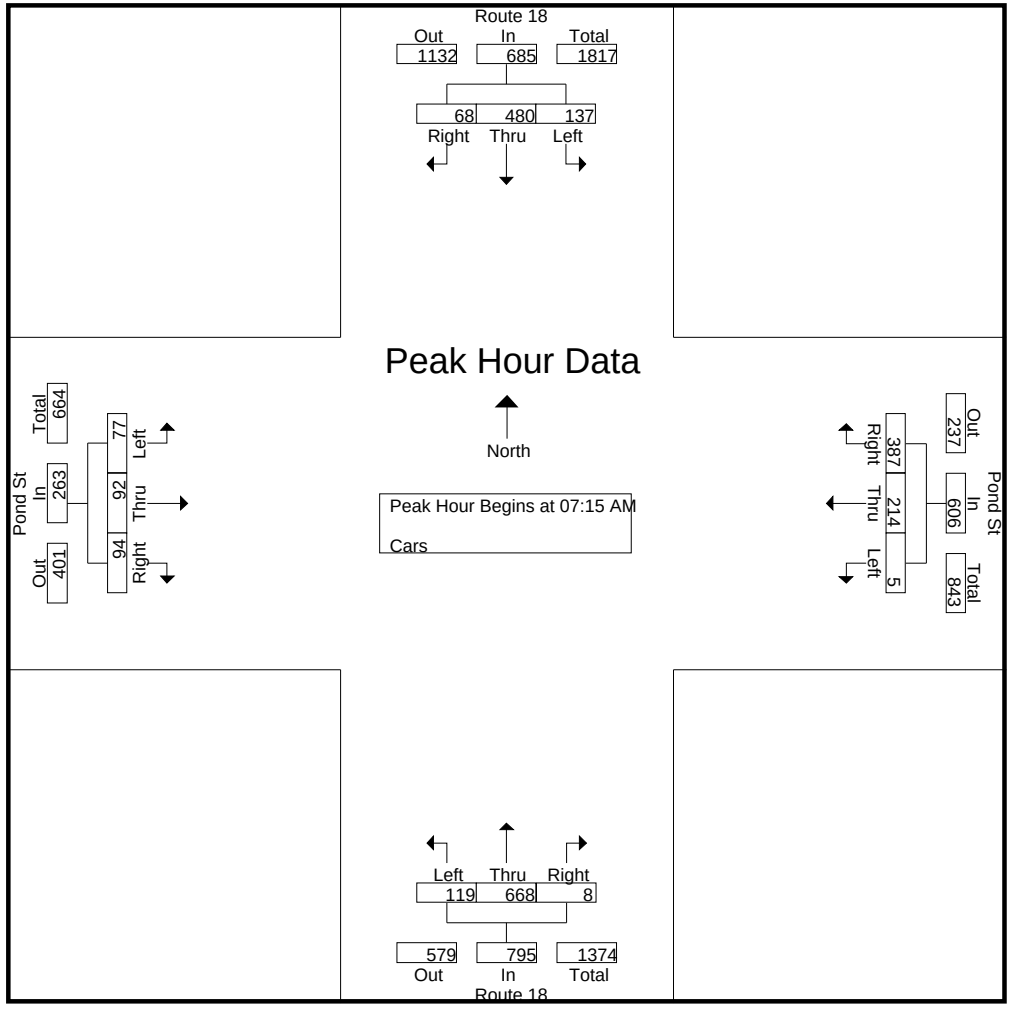

Peak Hour Analysis From 07:00 AM to 08:45 AM - Peak 1 of 1

Peak Hour for Each Approach Begins at:

	07:15 AM				07:15 AM				07:15 AM				07:15 AM			
+0 mins.	28	104	13	145	1	46	83	130	**33**	172	0	205	10	21	**31**	62
+15 mins.	27	**145**	19	**191**	1	49	100	150	27	**177**	**3**	**207**	22	21	18	61
+30 mins.	37	122	**20**	179	**2**	**64**	94	160	29	170	2	201	**23**	**25**	19	67
+45 mins.	**45**	109	16	170	1	55	**110**	**166**	30	149	3	182	22	25	26	**73**
Total Volume	137	480	68	685	5	214	387	606	119	668	8	795	77	92	94	263

Accurate Counts

978-664-2565

% App. Total	20	70.1	9.9		0.8	35.3	63.9		15	84	1		29.3	35	35.7	
PHF	.761	.828	.850	.897	.625	.836	.880	.913	.902	.944	.667	.960	.837	.920	.758	.901

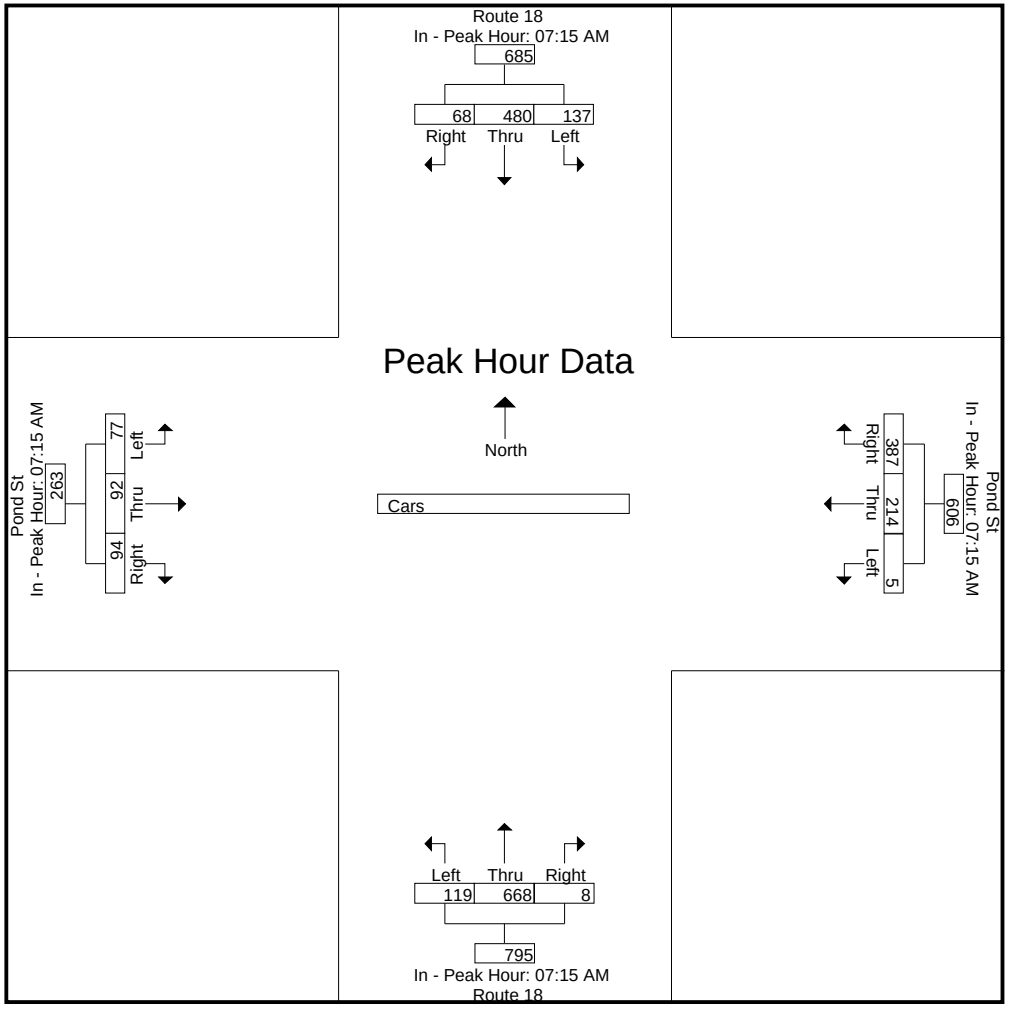

Accurate Counts

978-664-2565

N/S Street : Route 18
E/W Street: Pond Street
City/State : Weymouth, MA
Weather : Clear

File Name : 84260001
Site Code : 84260001
Start Date : 11/21/2019
Page No : 9

Groups Printed- Trucks

	Route 18 From North			Pond St From East			Route 18 From South			Pond St From West			
Start Time	Left	Thru	Right	Left	Thru	Right	Left	Thru	Right	Left	Thru	Right	Int. Total
07:00 AM	2	1	0	0	1	0	0	8	0	0	0	0	12
07:15 AM	0	2	0	0	0	1	0	6	0	0	0	1	10
07:30 AM	0	4	1	0	0	0	0	1	0	0	0	0	6
07:45 AM	1	1	0	0	0	0	0	4	0	1	0	0	7
Total	3	8	1	0	1	1	0	19	0	1	0	1	35
08:00 AM	0	1	0	0	1	0	0	2	2	0	0	1	7
08:15 AM	1	6	0	0	0	0	0	5	1	0	0	0	13
08:30 AM	1	3	0	0	1	3	0	2	0	2	0	0	12
08:45 AM	0	1	0	0	0	0	0	2	0	0	0	0	3
Total	2	11	0	0	2	3	0	11	3	2	0	1	35
Grand Total	5	19	1	0	3	4	0	30	3	3	0	2	70
Apprch %	20	76	4	0	42.9	57.1	0	90.9	9.1	60	0	40	
Total %	7.1	27.1	1.4	0	4.3	5.7	0	42.9	4.3	4.3	0	2.9	

Accurate Counts

978-664-2565

N/S Street : Route 18
E/W Street: Pond Street
City/State : Weymouth, MA
Weather : Clear

File Name : 84260001
Site Code : 84260001
Start Date : 11/21/2019
Page No : 10

	Route 18 From North				Pond St From East				Route 18 From South				Pond St From West				
Start Time	Left	Thru	Right	App. Total	Left	Thru	Right	App. Total	Left	Thru	Right	App. Total	Left	Thru	Right	App. Total	Int. Total
Peak Hour Analysis From 07:00 AM to 08:45 AM - Peak 1 of 1																	
Peak Hour for Entire Intersection Begins at 07:45 AM																	
07:45 AM	**1**	1	0	2	0	0	0	0	0	4	0	4	1	0	0	1	7
08:00 AM	0	1	0	1	0	**1**	0	1	0	2	**2**	4	0	0	**1**	1	7
08:15 AM	1	**6**	0	**7**	0	0	0	0	0	**5**	1	**6**	0	0	0	0	**13**
08:30 AM	1	3	0	4	0	1	**3**	**4**	0	2	0	2	**2**	0	0	**2**	12
Total Volume	3	11	0	14	0	2	3	5	0	13	3	16	3	0	1	4	39
% App. Total	21.4	78.6	0		0	40	60		0	81.2	18.8		75	0	25		
PHF	.750	.458	.000	.500	.000	.500	.250	.313	.000	.650	.375	.667	.375	.000	.250	.500	.750

Accurate Counts

978-664-2565

N/S Street : Route 18
E/W Street: Pond Street
City/State : Weymouth, MA
Weather : Clear

File Name : 84260001
Site Code : 84260001
Start Date : 11/21/2019
Page No : 11

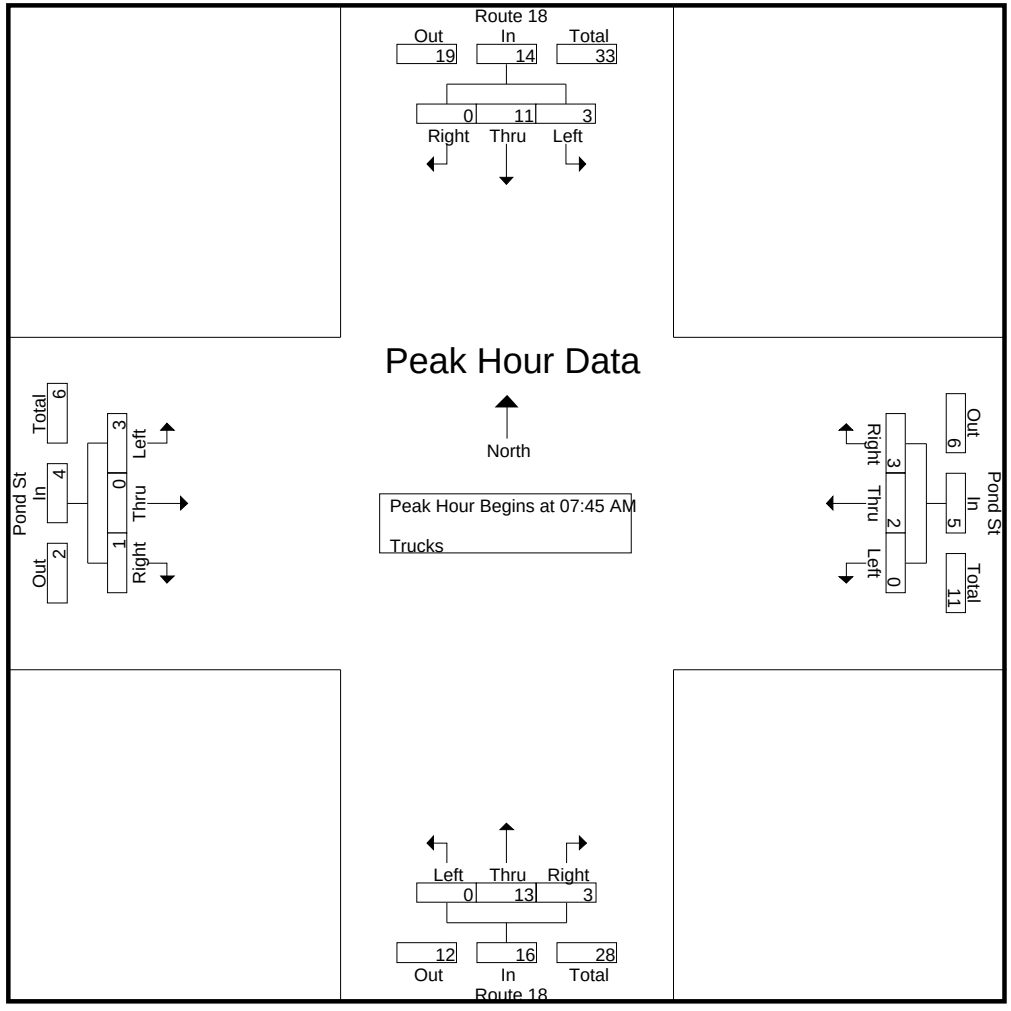

Peak Hour Analysis From 07:00 AM to 08:45 AM - Peak 1 of 1

Peak Hour for Each Approach Begins at:

	07:30 AM				07:45 AM				07:00 AM				07:45 AM			
+0 mins.	0	4	**1**	5	0	0	0	0	0	**8**	0	**8**	1	0	0	1
+15 mins.	**1**	1	0	2	0	**1**	0	1	0	6	0	6	0	0	**1**	1
+30 mins.	0	1	0	1	0	0	0	0	0	1	0	1	0	0	0	0
+45 mins.	1	**6**	0	**7**	0	1	**3**	**4**	0	4	0	4	**2**	0	0	**2**
Total Volume	2	12	1	15	0	2	3	5	0	19	0	19	3	0	1	4

Accurate Counts

978-664-2565

% App. Total	13.3	80	6.7		0	40	60		0	100	0		75	0	25	
PHF	.500	.500	.250	.536	.000	.500	.250	.313	.000	.594	.000	.594	.375	.000	.250	.500

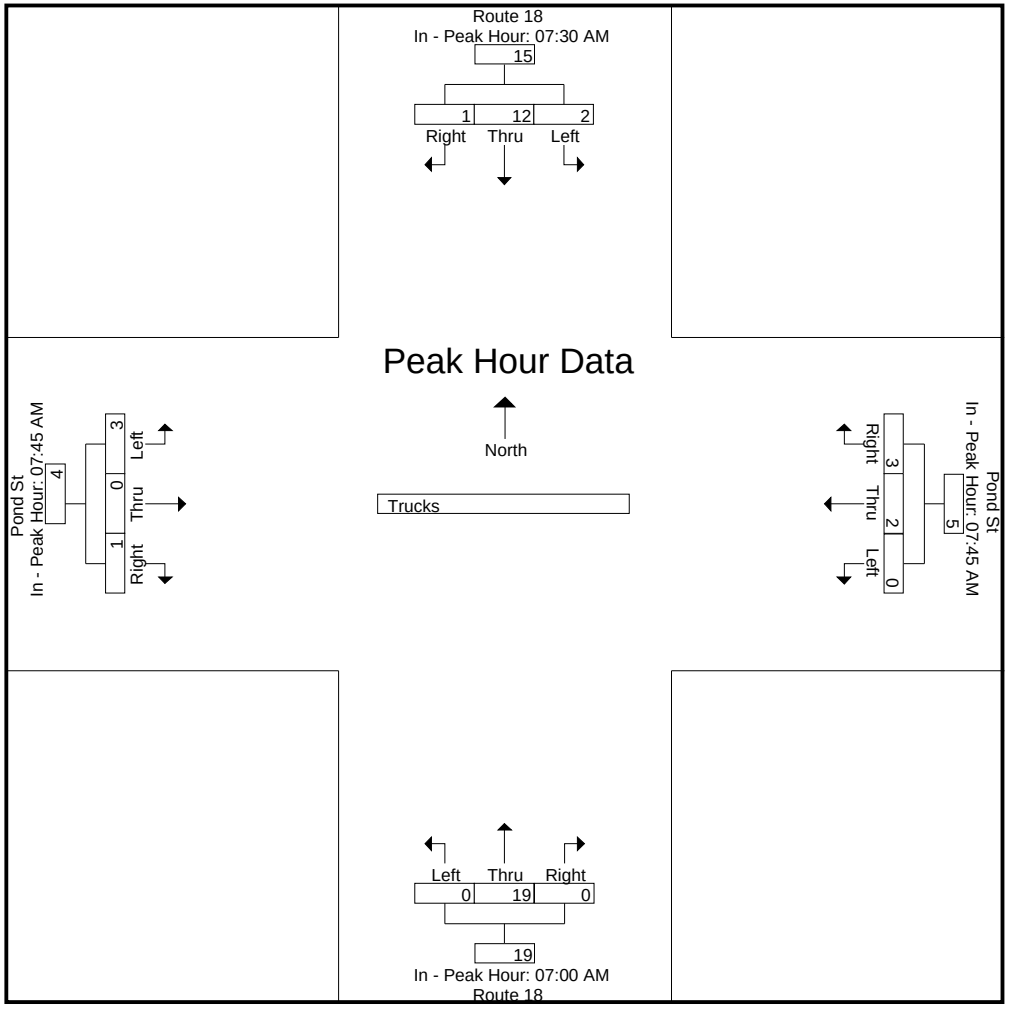

Accurate Counts

978-664-2565

N/S Street : Route 18
E/W Street: Pond Street
City/State : Weymouth, MA
Weather : Clear

File Name : 84260001
Site Code : 84260001
Start Date : 11/21/2019
Page No : 13

Groups Printed- Bikes Peds

	Route 18 From North				Pond St From East				Route 18 From South				Pond St From West						
Start Time	Left	Thru	Right	Peds	Left	Thru	Right	Peds	Left	Thru	Right	Peds	Left	Thru	Right	Peds	Exclu. Total	Inclu. Total	Int. Total
07:00 AM	0	0	0	0	0	0	0	0	0	0	0	0	0	0	0	0	0	0	0
07:15 AM	0	0	0	0	0	0	0	0	0	0	0	0	0	0	0	0	0	0	0
07:30 AM	0	0	0	0	0	0	0	0	0	0	0	0	0	0	0	0	0	0	0
07:45 AM	0	0	0	0	0	0	0	0	0	0	0	0	0	0	0	0	0	0	0
Total	0	0	0	0	0	0	0	0	0	0	0	0	0	0	0	0	0	0	0
08:00 AM	0	0	0	0	0	0	0	0	0	0	0	0	0	0	0	0	0	0	0
08:15 AM	0	0	0	0	0	0	0	0	0	0	0	0	0	0	0	0	0	0	0
08:30 AM	0	0	0	0	0	0	0	0	0	0	0	0	0	0	0	0	0	0	0
08:45 AM	0	0	0	0	0	0	0	0	0	0	0	0	0	0	0	0	0	0	0
Total	0	0	0	0	0	0	0	0	0	0	0	0	0	0	0	0	0	0	0
Grand Total	0	0	0	0	0	0	0	0	0	0	0	0	0	0	0	0	0	0	0
Apprch %	0	0	0		0	0	0		0	0	0		0	0	0				
Total %																	0	0	

Accurate Counts

978-664-2565

N/S Street : Route 18
E/W Street: Pond Street
City/State : Weymouth, MA
Weather : Clear

File Name : 84260001
Site Code : 84260001
Start Date : 11/21/2019
Page No : 14

	Route 18 From North				Pond St From East				Route 18 From South				Pond St From West				
Start Time	Left	Thru	Right	App. Total	Left	Thru	Right	App. Total	Left	Thru	Right	App. Total	Left	Thru	Right	App. Total	Int. Total
Peak Hour Analysis From 07:00 AM to 08:45 AM - Peak 1 of 1																	
Peak Hour for Entire Intersection Begins at 07:00 AM																	
07:00 AM	0	0	0	0	0	0	0	0	0	0	0	0	0	0	0	0	0
07:15 AM	0	0	0	0	0	0	0	0	0	0	0	0	0	0	0	0	0
07:30 AM	0	0	0	0	0	0	0	0	0	0	0	0	0	0	0	0	0
07:45 AM	0	0	0	0	0	0	0	0	0	0	0	0	0	0	0	0	0
Total Volume	0	0	0	0	0	0	0	0	0	0	0	0	0	0	0	0	0
% App. Total	0	0	0		0	0	0		0	0	0		0	0	0		
PHF	.000	.000	.000	.000	.000	.000	.000	.000	.000	.000	.000	.000	.000	.000	.000	.000	.000

Accurate Counts

978-664-2565

N/S Street : Route 18
E/W Street: Pond Street
City/State : Weymouth, MA
Weather : Clear

File Name : 84260001
Site Code : 84260001
Start Date : 11/21/2019
Page No : 15

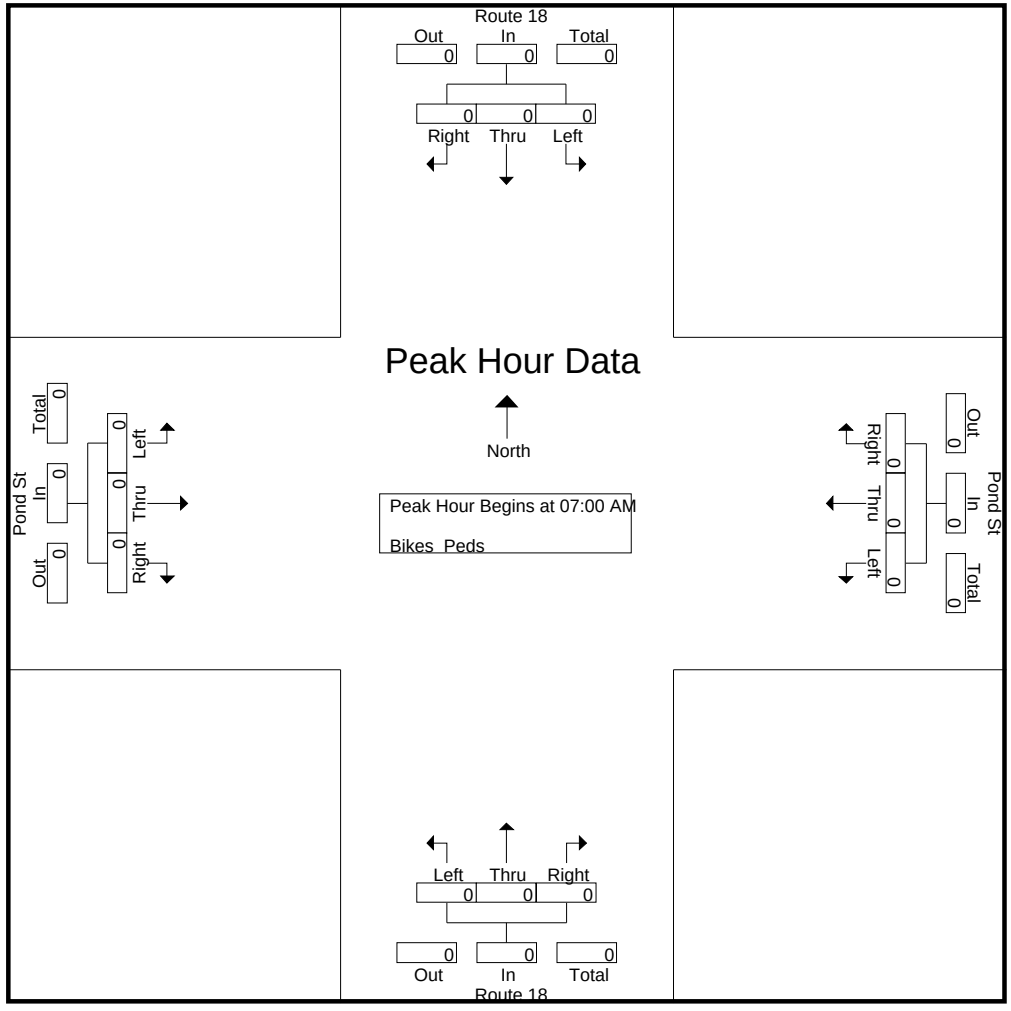

Peak Hour Analysis From 07:00 AM to 08:45 AM - Peak 1 of 1

Peak Hour for Each Approach Begins at:

	07:00 AM				07:00 AM				07:00 AM				07:00 AM			
+0 mins.	0	0	0	0	0	0	0	0	0	0	0	0	0	0	0	0
+15 mins.	0	0	0	0	0	0	0	0	0	0	0	0	0	0	0	0
+30 mins.	0	0	0	0	0	0	0	0	0	0	0	0	0	0	0	0
+45 mins.	0	0	0	0	0	0	0	0	0	0	0	0	0	0	0	0
Total Volume	0	0	0	0	0	0	0	0	0	0	0	0	0	0	0	0

Accurate Counts

978-664-2565

% App. Total	0	0	0		0	0	0		0	0	0		0	0	0	
PHF	.000	.000	.000	.000	.000	.000	.000	.000	.000	.000	.000	.000	.000	.000	.000	.000

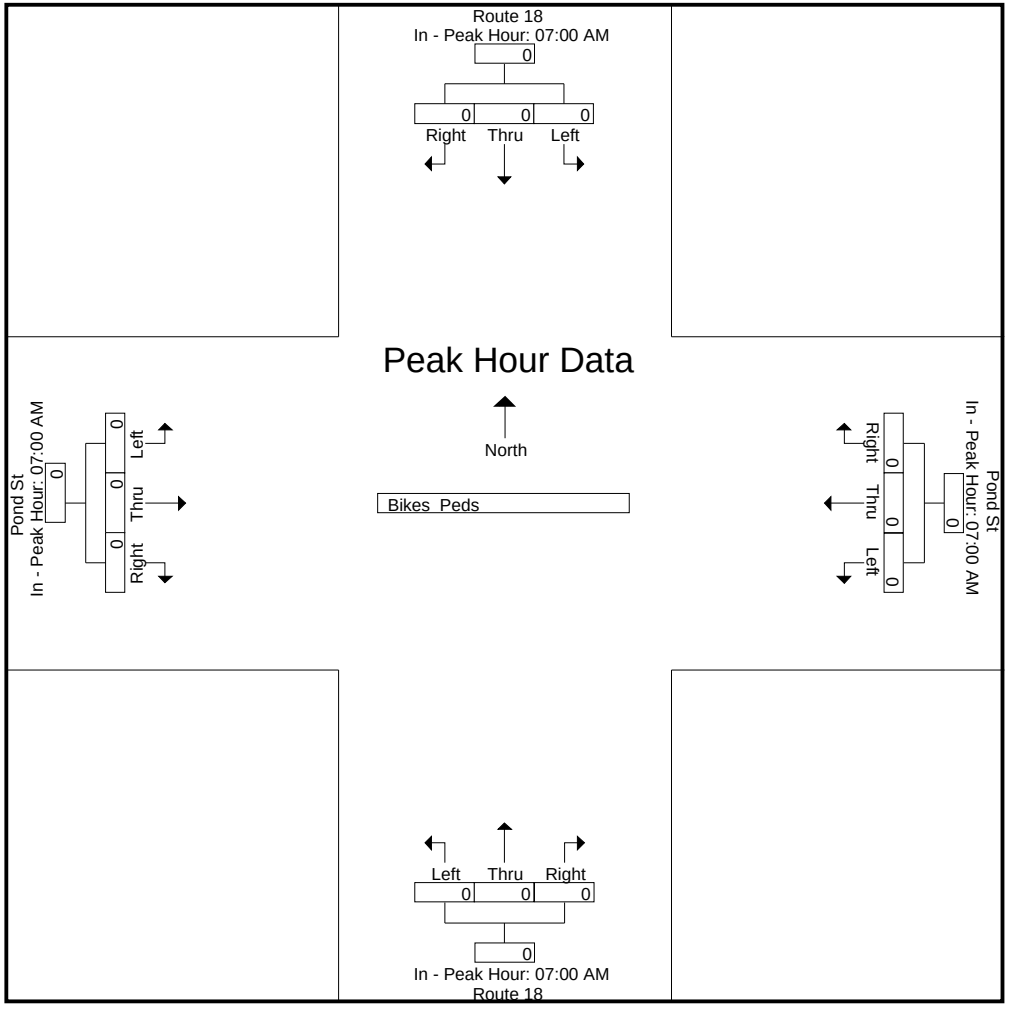

Accurate Counts

978-664-2565

N/S Street : Route 18
E/W Street: Pond Street
City/State : Weymouth, MA
Weather : Clear

File Name : 84260001
Site Code : 84260001
Start Date : 11/21/2019
Page No : 1

Groups Printed- Cars - Trucks

	Route 18 From North			Pond St From East			Route 18 From South			Pond St From West			
Start Time	Left	Thru	Right	Left	Thru	Right	Left	Thru	Right	Left	Thru	Right	Int. Total
04:00 PM	64	170	26	0	19	55	24	136	8	18	60	40	620
04:15 PM	85	155	21	5	26	54	31	124	9	16	53	36	615
04:30 PM	68	182	19	3	14	61	22	150	9	9	59	31	627
04:45 PM	82	179	20	3	20	58	27	126	6	7	57	40	625
Total	299	686	86	11	79	228	104	536	32	50	229	147	2487
05:00 PM	73	169	33	6	28	60	27	158	9	9	54	44	670
05:15 PM	80	177	32	4	23	72	20	132	5	13	58	40	656
05:30 PM	95	142	48	2	23	46	21	115	5	9	63	26	595
05:45 PM	75	158	17	5	12	47	15	133	7	17	48	32	566
Total	323	646	130	17	86	225	83	538	26	48	223	142	2487
Grand Total	622	1332	216	28	165	453	187	1074	58	98	452	289	4974
Apprch %	28.7	61.4	10	4.3	25.5	70.1	14.2	81.4	4.4	11.7	53.9	34.4	
Total %	12.5	26.8	4.3	0.6	3.3	9.1	3.8	21.6	1.2	2	9.1	5.8	
Cars	620	1302	216	28	165	451	187	1067	58	97	452	284	4927
% Cars	99.7	97.7	100	100	100	99.6	100	99.3	100	99	100	98.3	99.1
Trucks	2	30	0	0	0	2	0	7	0	1	0	5	47
% Trucks	0.3	2.3	0	0	0	0.4	0	0.7	0	1	0	1.7	0.9

Accurate Counts

978-664-2565

N/S Street : Route 18
E/W Street: Pond Street
City/State : Weymouth, MA
Weather : Clear

File Name : 84260001
Site Code : 84260001
Start Date : 11/21/2019
Page No : 2

	Route 18 From North				Pond St From East				Route 18 From South				Pond St From West				
Start Time	Left	Thru	Right	App. Total	Left	Thru	Right	App. Total	Left	Thru	Right	App. Total	Left	Thru	Right	App. Total	Int. Total
Peak Hour Analysis From 04:00 PM to 05:45 PM - Peak 1 of 1																	
Peak Hour for Entire Intersection Begins at 04:30 PM																	
04:30 PM	68	**182**	19	269	3	14	61	78	22	150	**9**	181	9	**59**	31	99	627
04:45 PM	**82**	179	20	281	3	20	58	81	**27**	126	6	159	7	57	40	104	625
05:00 PM	73	169	**33**	275	**6**	**28**	60	94	27	**158**	9	**194**	9	54	**44**	107	**670**
05:15 PM	80	177	32	**289**	4	23	**72**	**99**	20	132	5	157	**13**	58	40	**111**	656
Total Volume	303	707	104	1114	16	85	251	352	96	566	29	691	38	228	155	421	2578
% App. Total	27.2	63.5	9.3		4.5	24.1	71.3		13.9	81.9	4.2		9	54.2	36.8		
PHF	.924	.971	.788	.964	.667	.759	.872	.889	.889	.896	.806	.890	.731	.966	.881	.948	.962
Cars	301	689	104	1094	16	85	250	351	96	564	29	689	37	228	153	418	2552
% Cars	99.3	97.5	100	98.2	100	100	99.6	99.7	100	99.6	100	99.7	97.4	100	98.7	99.3	99.0
Trucks	2	18	0	20	0	0	1	1	0	2	0	2	1	0	2	3	26
% Trucks	0.7	2.5	0	1.8	0	0	0.4	0.3	0	0.4	0	0.3	2.6	0	1.3	0.7	1.0

Accurate Counts

978-664-2565

N/S Street : Route 18
E/W Street: Pond Street
City/State : Weymouth, MA
Weather : Clear

File Name : 84260001
Site Code : 84260001
Start Date : 11/21/2019
Page No : 3

Peak Hour Analysis From 04:00 PM to 05:45 PM - Peak 1 of 1

Peak Hour for Each Approach Begins at:

	04:45 PM				04:30 PM				04:15 PM				04:00 PM			
+0 mins.	82	**179**	20	281	3	14	61	78	**31**	124	**9**	164	**18**	**60**	**40**	**118**
+15 mins.	73	169	33	275	3	20	58	81	22	150	9	181	16	53	36	105
+30 mins.	80	177	32	**289**	**6**	**28**	60	94	27	126	6	159	9	59	31	99
+45 mins.	**95**	142	**48**	285	4	23	**72**	**99**	27	**158**	9	**194**	7	57	40	104
Total Volume	330	667	133	1130	16	85	251	352	107	558	33	698	50	229	147	426

Accurate Counts

978-664-2565

% App. Total	29.2	59	11.8		4.5	24.1	71.3		15.3	79.9	4.7		11.7	53.8	34.5	
PHF	.868	.932	.693	.978	.667	.759	.872	.889	.863	.883	.917	.899	.694	.954	.919	.903
Cars	328	654	133	1115	16	85	250	351	107	556	33	696	49	229	142	420
% Cars	99.4	98.1	100	98.7	100	100	99.6	99.7	100	99.6	100	99.7	98	100	96.6	98.6
Trucks	2	13	0	15	0	0	1	1	0	2	0	2	1	0	5	6
% Trucks	0.6	1.9	0	1.3	0	0	0.4	0.3	0	0.4	0	0.3	2	0	3.4	1.4

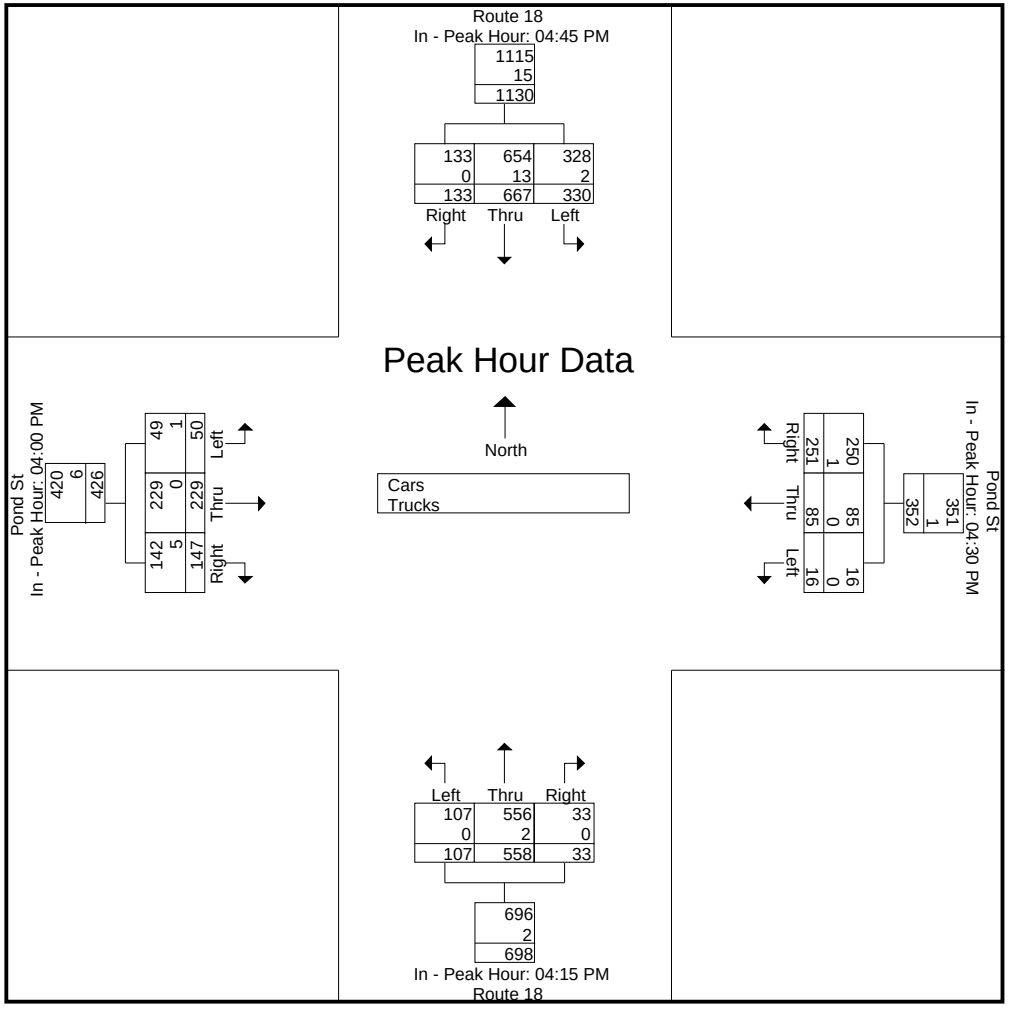

Accurate Counts

978-664-2565

N/S Street : Route 18
E/W Street: Pond Street
City/State : Weymouth, MA
Weather : Clear

File Name : 84260001
Site Code : 84260001
Start Date : 11/21/2019
Page No : 5

Groups Printed- Cars

	Route 18 From North			Pond St From East			Route 18 From South			Pond St From West			
Start Time	Left	Thru	Right	Left	Thru	Right	Left	Thru	Right	Left	Thru	Right	Int. Total
04:00 PM	64	161	26	0	19	55	24	134	8	18	60	39	608
04:15 PM	85	153	21	5	26	53	31	124	9	16	53	34	610
04:30 PM	68	176	19	3	14	61	22	150	9	8	59	30	619
04:45 PM	81	173	20	3	20	57	27	126	6	7	57	39	616
Total	298	663	86	11	79	226	104	534	32	49	229	142	2453
05:00 PM	73	166	33	6	28	60	27	156	9	9	54	44	665
05:15 PM	79	174	32	4	23	72	20	132	5	13	58	40	652
05:30 PM	95	141	48	2	23	46	21	114	5	9	63	26	593
05:45 PM	75	158	17	5	12	47	15	131	7	17	48	32	564
Total	322	639	130	17	86	225	83	533	26	48	223	142	2474
Grand Total	620	1302	216	28	165	451	187	1067	58	97	452	284	4927
Apprch %	29	60.9	10.1	4.3	25.6	70	14.3	81.3	4.4	11.6	54.3	34.1	
Total %	12.6	26.4	4.4	0.6	3.3	9.2	3.8	21.7	1.2	2	9.2	5.8	

Accurate Counts

978-664-2565

N/S Street : Route 18
E/W Street: Pond Street
City/State : Weymouth, MA
Weather : Clear

File Name : 84260001
Site Code : 84260001
Start Date : 11/21/2019
Page No : 6

	Route 18 From North				Pond St From East				Route 18 From South				Pond St From West				
Start Time	Left	Thru	Right	App. Total	Left	Thru	Right	App. Total	Left	Thru	Right	App. Total	Left	Thru	Right	App. Total	Int. Total
Peak Hour Analysis From 04:00 PM to 05:45 PM - Peak 1 of 1																	
Peak Hour for Entire Intersection Begins at 04:30 PM																	
04:30 PM	68	**176**	19	263	3	14	61	78	22	150	**9**	181	8	**59**	30	97	619
04:45 PM	**81**	173	20	274	3	20	57	80	**27**	126	6	159	7	57	39	103	616
05:00 PM	73	166	**33**	272	**6**	**28**	60	94	27	**156**	9	**192**	9	54	**44**	107	**665**
05:15 PM	79	174	32	**285**	4	23	**72**	**99**	20	132	5	157	**13**	58	40	**111**	652
Total Volume	301	689	104	1094	16	85	250	351	96	564	29	689	37	228	153	418	2552
% App. Total	27.5	63	9.5		4.6	24.2	71.2		13.9	81.9	4.2		8.9	54.5	36.6		
PHF	.929	.979	.788	.960	.667	.759	.868	.886	.889	.904	.806	.897	.712	.966	.869	.941	.959

Accurate Counts

978-664-2565

N/S Street : Route 18
E/W Street: Pond Street
City/State : Weymouth, MA
Weather : Clear

File Name : 84260001
Site Code : 84260001
Start Date : 11/21/2019
Page No : 7

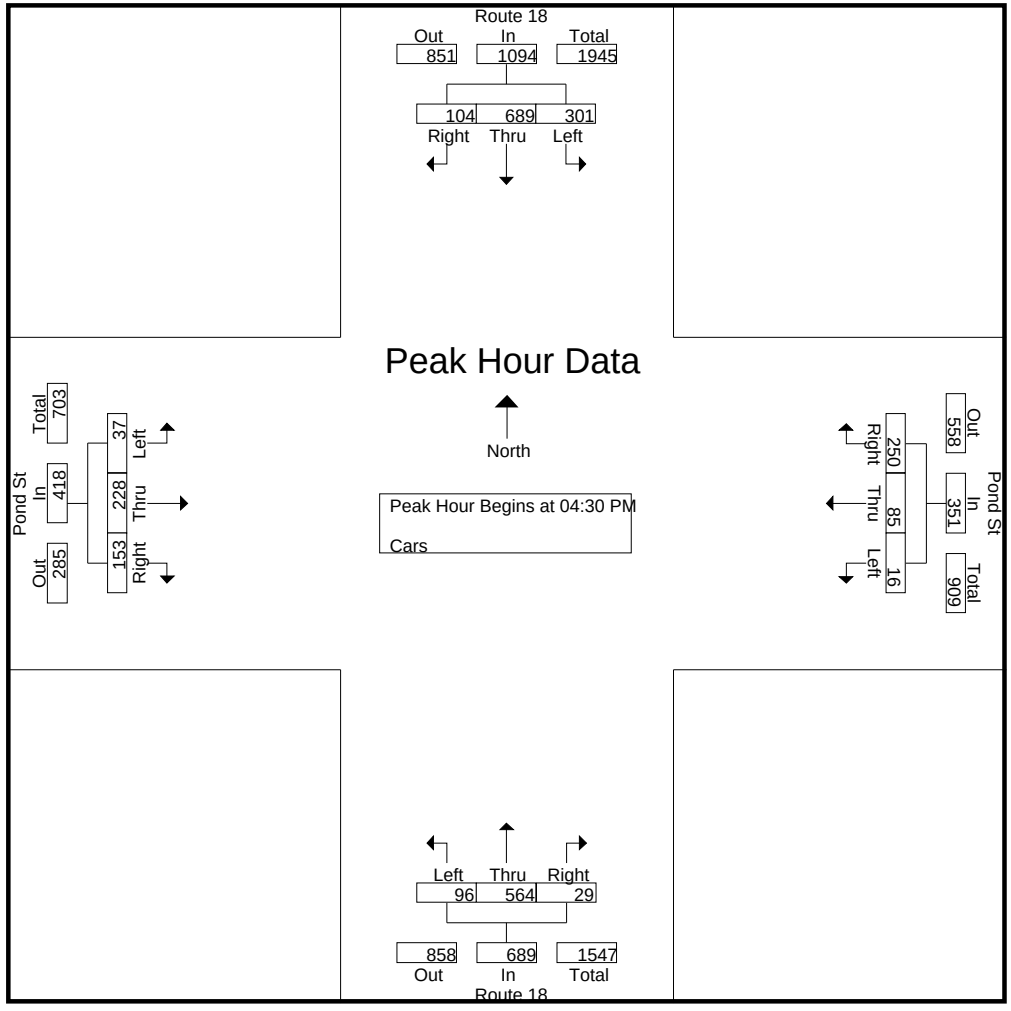

Peak Hour Analysis From 04:00 PM to 05:45 PM - Peak 1 of 1

Peak Hour for Each Approach Begins at:

	04:45 PM				04:30 PM				04:15 PM				04:00 PM			
+0 mins.	81	173	20	274	3	14	61	78	**31**	124	**9**	164	**18**	**60**	**39**	**117**
+15 mins.	73	166	33	272	3	20	57	80	22	150	9	181	16	53	34	103
+30 mins.	79	**174**	32	**285**	**6**	**28**	60	94	27	126	6	159	8	59	30	97
+45 mins.	**95**	141	**48**	284	4	23	**72**	**99**	27	**156**	9	**192**	7	57	39	103
Total Volume	328	654	133	1115	16	85	250	351	107	556	33	696	49	229	142	420

Accurate Counts

978-664-2565

% App. Total	29.4	58.7	11.9		4.6	24.2	71.2		15.4	79.9	4.7		11.7	54.5	33.8	
PHF	.863	.940	.693	.978	.667	.759	.868	.886	.863	.891	.917	.906	.681	.954	.910	.897

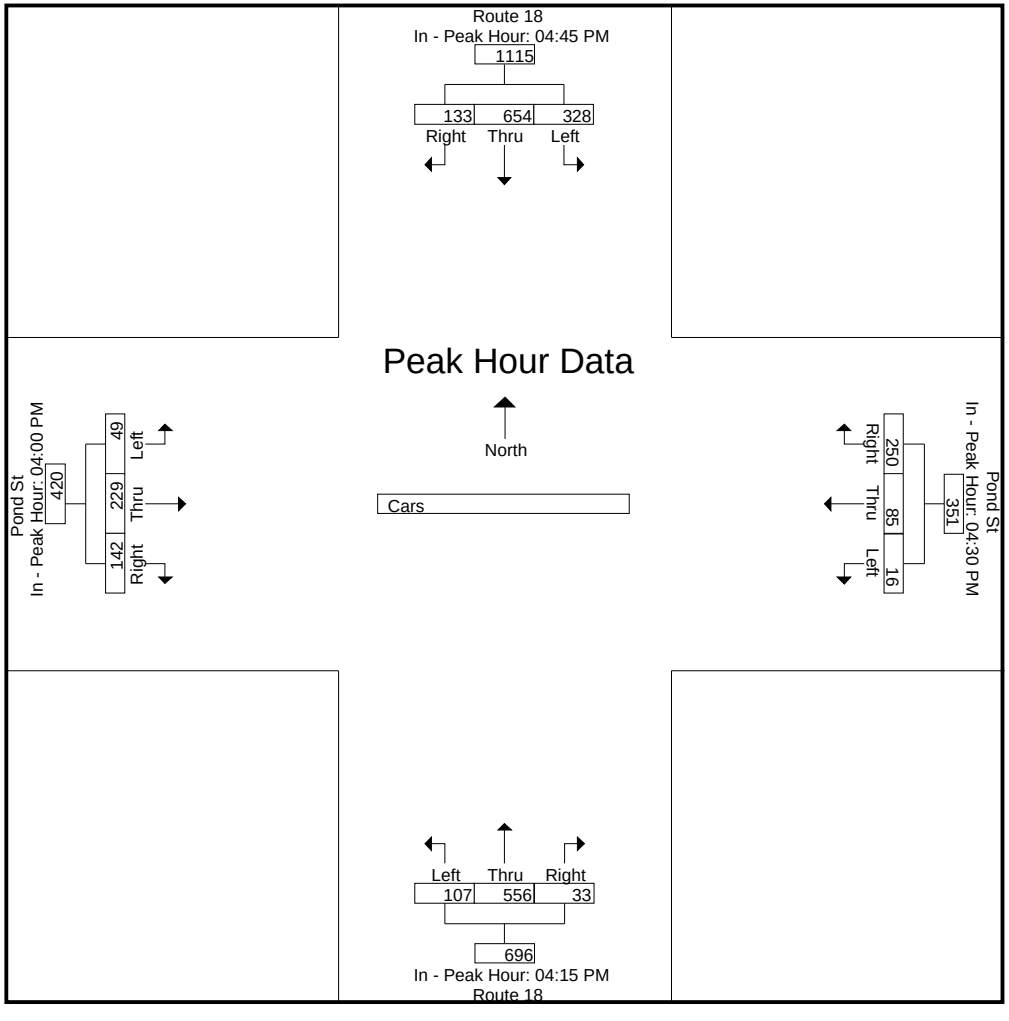

Accurate Counts

978-664-2565

N/S Street : Route 18
E/W Street: Pond Street
City/State : Weymouth, MA
Weather : Clear

File Name : 84260001
Site Code : 84260001
Start Date : 11/21/2019
Page No : 9

Groups Printed- Trucks

	Route 18 From North			Pond St From East			Route 18 From South			Pond St From West			
Start Time	Left	Thru	Right	Left	Thru	Right	Left	Thru	Right	Left	Thru	Right	Int. Total
04:00 PM	0	9	0	0	0	0	0	2	0	0	0	1	12
04:15 PM	0	2	0	0	0	1	0	0	0	0	0	2	5
04:30 PM	0	6	0	0	0	0	0	0	0	1	0	1	8
04:45 PM	1	6	0	0	0	1	0	0	0	0	0	1	9
Total	1	23	0	0	0	2	0	2	0	1	0	5	34
05:00 PM	0	3	0	0	0	0	0	2	0	0	0	0	5
05:15 PM	1	3	0	0	0	0	0	0	0	0	0	0	4
05:30 PM	0	1	0	0	0	0	0	1	0	0	0	0	2
05:45 PM	0	0	0	0	0	0	0	2	0	0	0	0	2
Total	1	7	0	0	0	0	0	5	0	0	0	0	13
Grand Total	2	30	0	0	0	2	0	7	0	1	0	5	47
Apprch %	6.2	93.8	0	0	0	100	0	100	0	16.7	0	83.3	
Total %	4.3	63.8	0	0	0	4.3	0	14.9	0	2.1	0	10.6	

Accurate Counts

978-664-2565

N/S Street : Route 18
E/W Street: Pond Street
City/State : Weymouth, MA
Weather : Clear

File Name : 84260001
Site Code : 84260001
Start Date : 11/21/2019
Page No : 10

	Route 18 From North				Pond St From East				Route 18 From South				Pond St From West				
Start Time	Left	Thru	Right	App. Total	Left	Thru	Right	App. Total	Left	Thru	Right	App. Total	Left	Thru	Right	App. Total	Int. Total
Peak Hour Analysis From 04:00 PM to 05:45 PM - Peak 1 of 1																	
Peak Hour for Entire Intersection Begins at 04:00 PM																	
04:00 PM	0	**9**	0	**9**	0	0	0	0	0	**2**	0	**2**	0	0	1	1	**12**
04:15 PM	0	2	0	2	0	0	**1**	**1**	0	0	0	0	0	0	**2**	**2**	5
04:30 PM	0	6	0	6	0	0	0	0	0	0	0	0	**1**	0	1	2	8
04:45 PM	**1**	6	0	7	0	0	1	1	0	0	0	0	0	0	1	1	9
Total Volume	1	23	0	24	0	0	2	2	0	2	0	2	1	0	5	6	34
% App. Total	4.2	95.8	0		0	0	100		0	100	0		16.7	0	83.3		
PHF	.250	.639	.000	.667	.000	.000	.500	.500	.000	.250	.000	.250	.250	.000	.625	.750	.708

Accurate Counts

978-664-2565

N/S Street : Route 18
E/W Street: Pond Street
City/State : Weymouth, MA
Weather : Clear

File Name : 84260001
Site Code : 84260001
Start Date : 11/21/2019
Page No : 11

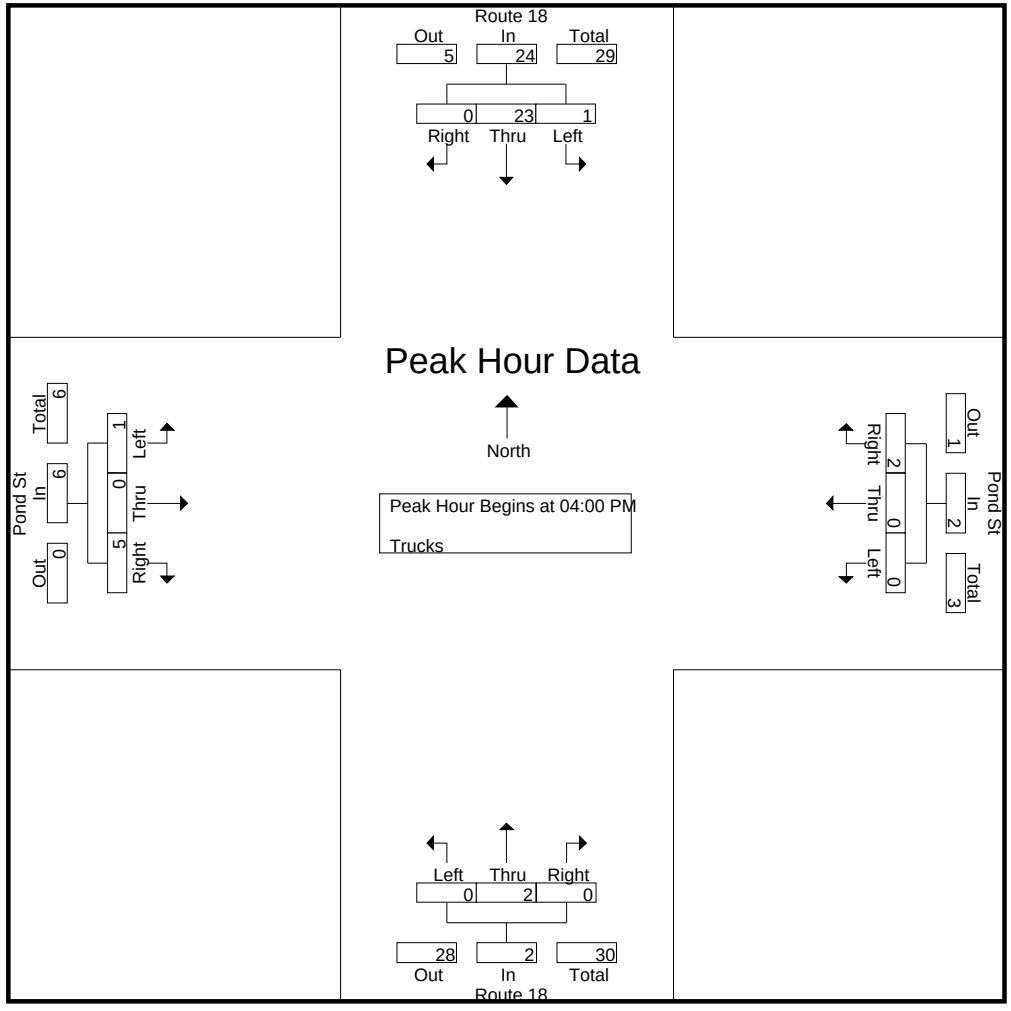

Peak Hour Analysis From 04:00 PM to 05:45 PM - Peak 1 of 1

Peak Hour for Each Approach Begins at:

	04:00 PM				04:00 PM				05:00 PM				04:00 PM			
+0 mins.	0	**9**	0	**9**	0	0	0	0	0	**2**	0	**2**	0	0	1	1
+15 mins.	0	2	0	2	0	0	**1**	**1**	0	0	0	0	0	0	**2**	**2**
+30 mins.	0	6	0	6	0	0	0	0	0	1	0	1	**1**	0	1	2
+45 mins.	**1**	6	0	7	0	0	1	1	0	2	0	2	0	0	1	1
Total Volume	1	23	0	24	0	0	2	2	0	5	0	5	1	0	5	6

Accurate Counts

978-664-2565

% App. Total	4.2	95.8	0		0	0	100		0	100	0		16.7	0	83.3	
PHF	.250	.639	.000	.667	.000	.000	.500	.500	.000	.625	.000	.625	.250	.000	.625	.750

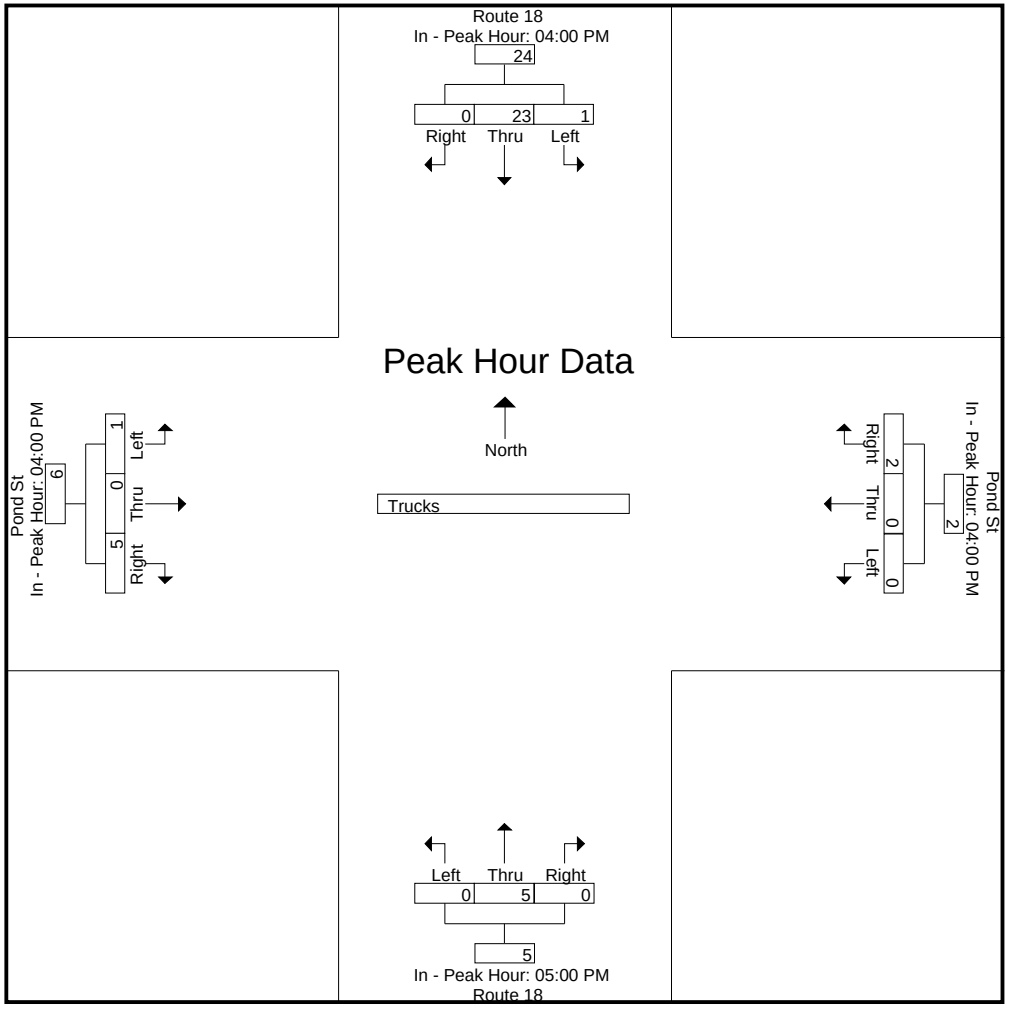

Accurate Counts

978-664-2565

N/S Street : Route 18
E/W Street: Pond Street
City/State : Weymouth, MA
Weather : Clear

File Name : 84260001
Site Code : 84260001
Start Date : 11/21/2019
Page No : 13

Groups Printed- Bikes Peds

	Route 18 From North				Pond St From East				Route 18 From South				Pond St From West						
Start Time	Left	Thru	Right	Peds	Left	Thru	Right	Peds	Left	Thru	Right	Peds	Left	Thru	Right	Peds	Exclu. Total	Inclu. Total	Int. Total
04:00 PM	0	0	0	0	0	0	0	0	0	0	0	0	0	0	0	0	0	0	0
04:15 PM	0	0	0	0	0	0	0	0	0	0	0	0	0	0	0	0	0	0	0
04:30 PM	0	0	0	0	0	0	0	0	0	0	0	0	0	0	0	0	0	0	0
04:45 PM	0	0	0	0	0	0	0	0	0	0	0	0	0	0	0	0	0	0	0
Total	0	0	0	0	0	0	0	0	0	0	0	0	0	0	0	0	0	0	0
05:00 PM	0	0	0	0	0	0	0	0	0	0	0	0	0	0	0	0	0	0	0
05:15 PM	0	0	0	0	0	0	0	0	0	0	0	0	0	0	0	0	0	0	0
05:30 PM	0	0	0	0	0	0	0	0	0	0	0	0	0	0	0	0	0	0	0
05:45 PM	0	0	0	0	0	0	0	0	0	0	0	0	0	0	0	0	0	0	0
Total	0	0	0	0	0	0	0	0	0	0	0	0	0	0	0	0	0	0	0
Grand Total	0	0	0	0	0	0	0	0	0	0	0	0	0	0	0	0	0	0	0
Apprch %	0	0	0		0	0	0		0	0	0		0	0	0				
Total %																	0	0	

Accurate Counts

978-664-2565

N/S Street : Route 18
E/W Street: Pond Street
City/State : Weymouth, MA
Weather : Clear

File Name : 84260001
Site Code : 84260001
Start Date : 11/21/2019
Page No : 14

	Route 18 From North				Pond St From East				Route 18 From South				Pond St From West				
Start Time	Left	Thru	Right	App. Total	Left	Thru	Right	App. Total	Left	Thru	Right	App. Total	Left	Thru	Right	App. Total	Int. Total
Peak Hour Analysis From 04:00 PM to 05:45 PM - Peak 1 of 1																	
Peak Hour for Entire Intersection Begins at 04:00 PM																	
04:00 PM	0	0	0	0	0	0	0	0	0	0	0	0	0	0	0	0	0
04:15 PM	0	0	0	0	0	0	0	0	0	0	0	0	0	0	0	0	0
04:30 PM	0	0	0	0	0	0	0	0	0	0	0	0	0	0	0	0	0
04:45 PM	0	0	0	0	0	0	0	0	0	0	0	0	0	0	0	0	0
Total Volume	0	0	0	0	0	0	0	0	0	0	0	0	0	0	0	0	0
% App. Total	0	0	0		0	0	0		0	0	0		0	0	0		
PHF	.000	.000	.000	.000	.000	.000	.000	.000	.000	.000	.000	.000	.000	.000	.000	.000	.000

Accurate Counts

978-664-2565

N/S Street : Route 18
E/W Street: Pond Street
City/State : Weymouth, MA
Weather : Clear

File Name : 84260001
Site Code : 84260001
Start Date : 11/21/2019
Page No : 15

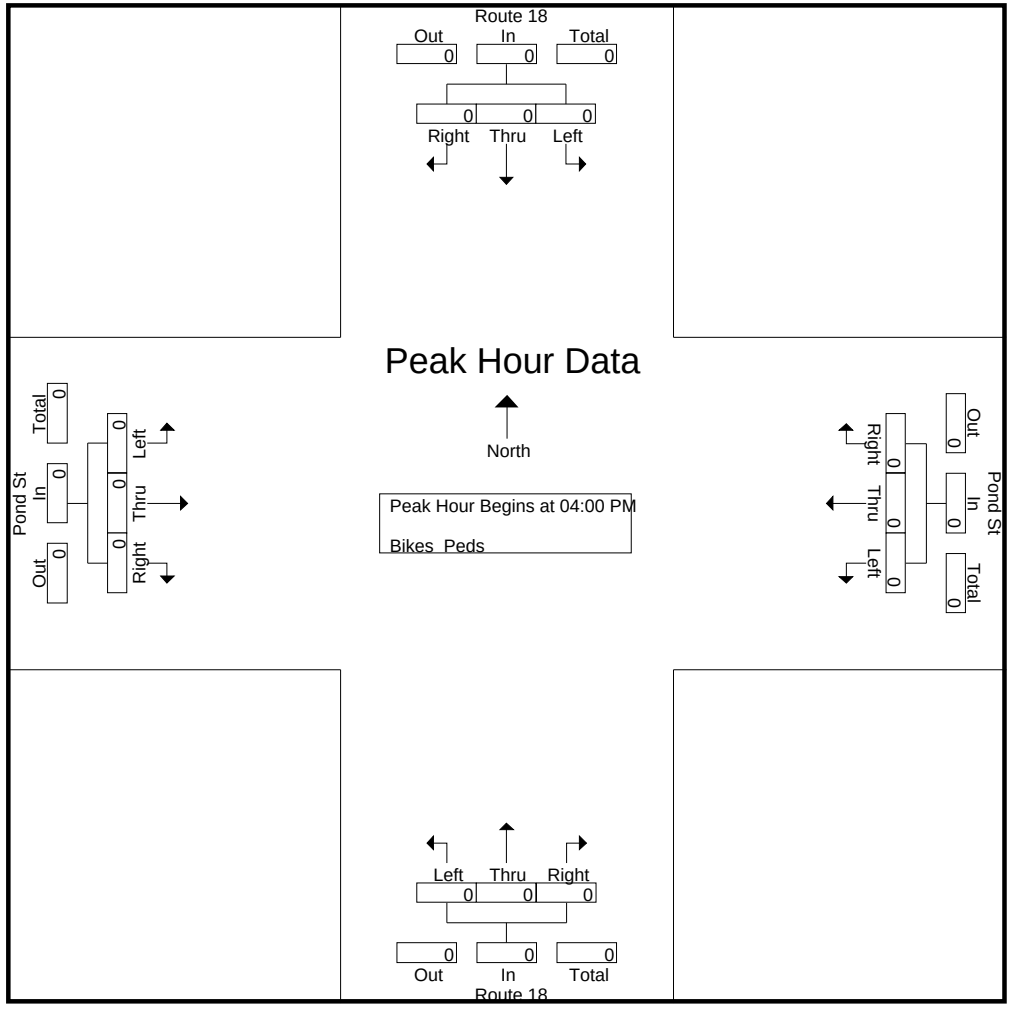

Peak Hour Analysis From 04:00 PM to 05:45 PM - Peak 1 of 1

Peak Hour for Each Approach Begins at:

	04:00 PM				04:00 PM				04:00 PM				04:00 PM			
+0 mins.	0	0	0	0	0	0	0	0	0	0	0	0	0	0	0	0
+15 mins.	0	0	0	0	0	0	0	0	0	0	0	0	0	0	0	0
+30 mins.	0	0	0	0	0	0	0	0	0	0	0	0	0	0	0	0
+45 mins.	0	0	0	0	0	0	0	0	0	0	0	0	0	0	0	0
Total Volume	0	0	0	0	0	0	0	0	0	0	0	0	0	0	0	0

Accurate Counts

978-664-2565

% App. Total	0	0	0		0	0	0		0	0	0		0	0	0	
PHF	.000	.000	.000	.000	.000	.000	.000	.000	.000	.000	.000	.000	.000	.000	.000	.000

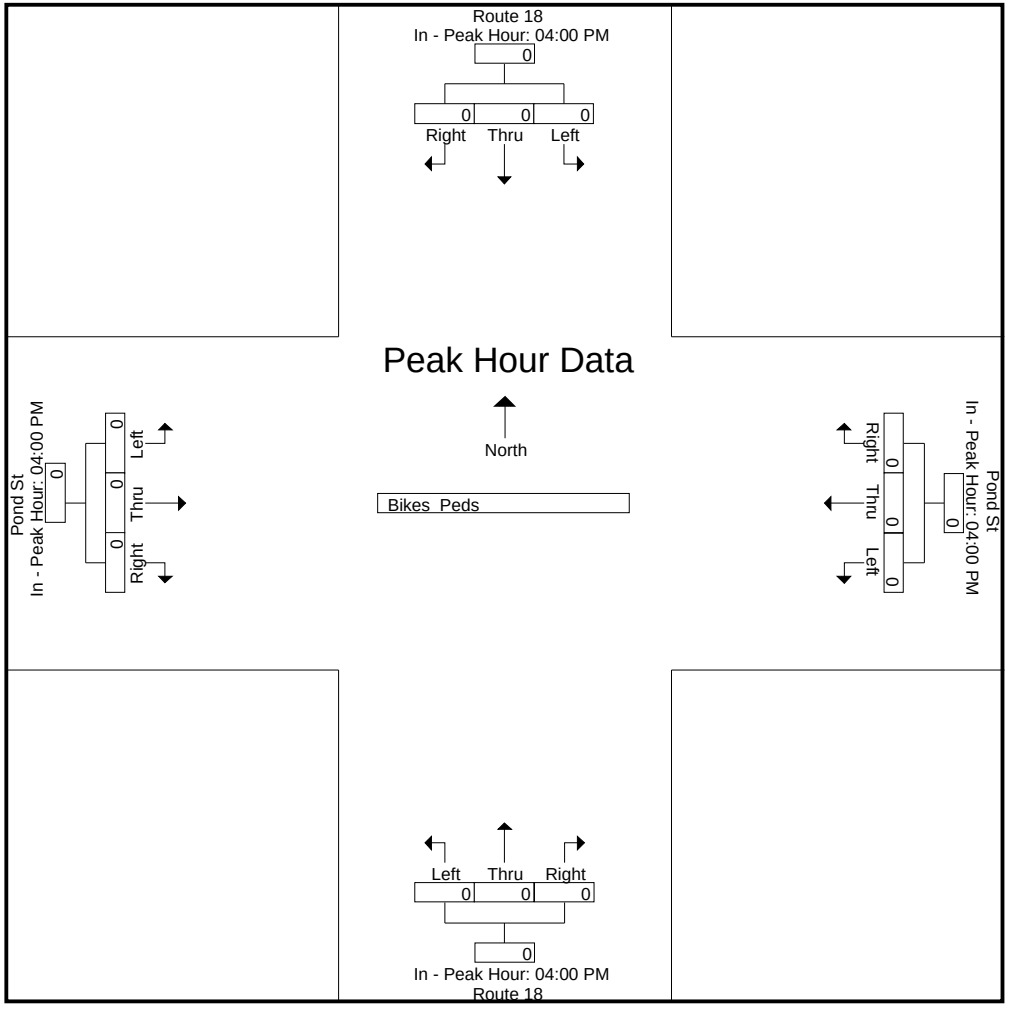

Accurate Counts

978-664-2565

N/S Street : Route 18
E/W Street: Pond Street
City/State : Weymouth, MA
Weather : Clear

File Name : 842600S1
Site Code : 84260001
Start Date : 11/23/2019
Page No : 1

Groups Printed- Cars - Trucks

	Route 18 From North			Pond St From East			Route 18 From South			Pond St From West			
Start Time	Left	Thru	Right	Left	Thru	Right	Left	Thru	Right	Left	Thru	Right	Int. Total
11:00 AM	50	151	17	3	18	69	27	172	12	14	33	37	603
11:15 AM	50	156	31	3	29	59	22	173	8	11	31	34	607
11:30 AM	55	154	26	2	29	56	22	155	4	13	28	47	591
11:45 AM	60	181	26	5	30	65	36	192	6	22	35	38	696
Total	215	642	100	13	106	249	107	692	30	60	127	156	2497
12:00 PM	54	150	21	3	18	59	32	138	9	7	34	37	562
12:15 PM	44	151	25	7	22	59	41	167	4	11	34	37	602
12:30 PM	56	174	18	5	30	60	28	170	10	15	42	42	650
12:45 PM	58	189	23	6	28	54	31	147	10	9	42	36	633
Total	212	664	87	21	98	232	132	622	33	42	152	152	2447
01:00 PM	40	199	28	1	21	57	54	169	12	9	26	23	639
01:15 PM	63	144	20	9	23	61	30	180	8	17	27	34	616
01:30 PM	59	136	27	7	25	56	35	135	10	11	31	45	577
01:45 PM	57	149	17	5	29	71	23	138	11	9	28	34	571
Total	219	628	92	22	98	245	142	622	41	46	112	136	2403
Grand Total	646	1934	279	56	302	726	381	1936	104	148	391	444	7347
Apprch %	22.6	67.6	9.8	5.2	27.9	67	15.7	80	4.3	15.1	39.8	45.2	
Total %	8.8	26.3	3.8	0.8	4.1	9.9	5.2	26.4	1.4	2	5.3	6	
Cars	635	1922	279	55	302	724	381	1923	104	148	391	443	7307
% Cars	98.3	99.4	100	98.2	100	99.7	100	99.3	100	100	100	99.8	99.5
Trucks	11	12	0	1	0	2	0	13	0	0	0	1	40
% Trucks	1.7	0.6	0	1.8	0	0.3	0	0.7	0	0	0	0.2	0.5

Accurate Counts

978-664-2565

N/S Street : Route 18
E/W Street: Pond Street
City/State : Weymouth, MA
Weather : Clear

File Name : 842600S1
Site Code : 84260001
Start Date : 11/23/2019
Page No : 2

	Route 18 From North				Pond St From East				Route 18 From South				Pond St From West				
Start Time	Left	Thru	Right	App. Total	Left	Thru	Right	App. Total	Left	Thru	Right	App. Total	Left	Thru	Right	App. Total	Int. Total
Peak Hour Analysis From 11:00 AM to 01:45 PM - Peak 1 of 1																	
Peak Hour for Entire Intersection Begins at 12:30 PM																	
12:30 PM	56	174	18	248	5	**30**	60	**95**	28	170	10	208	15	**42**	**42**	**99**	**650**
12:45 PM	58	189	23	**270**	6	28	54	88	31	147	10	188	9	42	36	87	633
01:00 PM	40	**199**	**28**	267	1	21	57	79	**54**	169	**12**	**235**	9	26	23	58	639
01:15 PM	**63**	144	20	227	**9**	23	**61**	93	30	**180**	8	218	**17**	27	34	78	616
Total Volume	217	706	89	1012	21	102	232	355	143	666	40	849	50	137	135	322	2538
% App. Total	21.4	69.8	8.8		5.9	28.7	65.4		16.8	78.4	4.7		15.5	42.5	41.9		
PHF	.861	.887	.795	.937	.583	.850	.951	.934	.662	.925	.833	.903	.735	.815	.804	.813	.976
Cars	214	703	89	1006	21	102	231	354	143	662	40	845	50	137	135	322	2527
% Cars	98.6	99.6	100	99.4	100	100	99.6	99.7	100	99.4	100	99.5	100	100	100	100	99.6
Trucks	3	3	0	6	0	0	1	1	0	4	0	4	0	0	0	0	11
% Trucks	1.4	0.4	0	0.6	0	0	0.4	0.3	0	0.6	0	0.5	0	0	0	0	0.4

Accurate Counts

978-664-2565

N/S Street : Route 18
E/W Street: Pond Street
City/State : Weymouth, MA
Weather : Clear

File Name : 842600S1
Site Code : 84260001
Start Date : 11/23/2019
Page No : 3

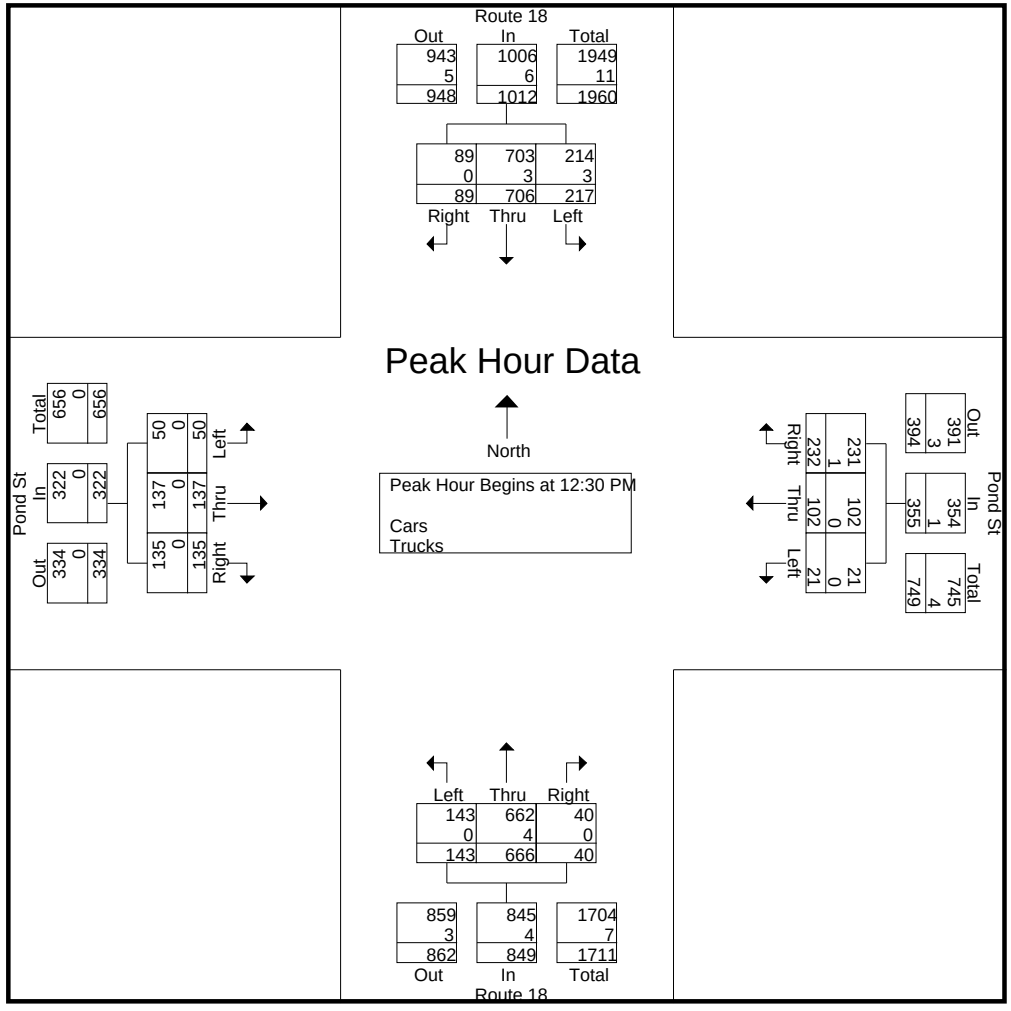

Peak Hour Analysis From 11:00 AM to 01:45 PM - Peak 1 of 1

Peak Hour for Each Approach Begins at:

	12:30 PM				11:00 AM				12:30 PM				11:45 AM			
+0 mins.	56	174	18	248	3	18	**69**	90	28	170	10	208	**22**	35	38	95
+15 mins.	58	189	23	**270**	3	29	59	91	31	147	10	188	7	34	37	78
+30 mins.	40	**199**	**28**	267	2	29	56	87	**54**	169	**12**	**235**	11	34	37	82
+45 mins.	**63**	144	20	227	**5**	**30**	65	**100**	30	**180**	8	218	15	**42**	**42**	**99**
Total Volume	217	706	89	1012	13	106	249	368	143	666	40	849	55	145	154	354
% App. Total	21.4	69.8	8.8		3.5	28.8	67.7		16.8	78.4	4.7		15.5	41	43.5	
PHF	.861	.887	.795	.937	.650	.883	.902	.920	.662	.925	.833	.903	.625	.863	.917	.894

Accurate Counts

978-664-2565

Cars	214	703	89	1006	13	106	248	367	143	662	40	845	55	145	154	354
% Cars	98.6	99.6	100	99.4	100	100	99.6	99.7	100	99.4	100	99.5	100	100	100	100
Trucks	3	3	0	6	0	0	1	1	0	4	0	4	0	0	0	0
% Trucks	1.4	0.4	0	0.6	0	0	0.4	0.3	0	0.6	0	0.5	0	0	0	0

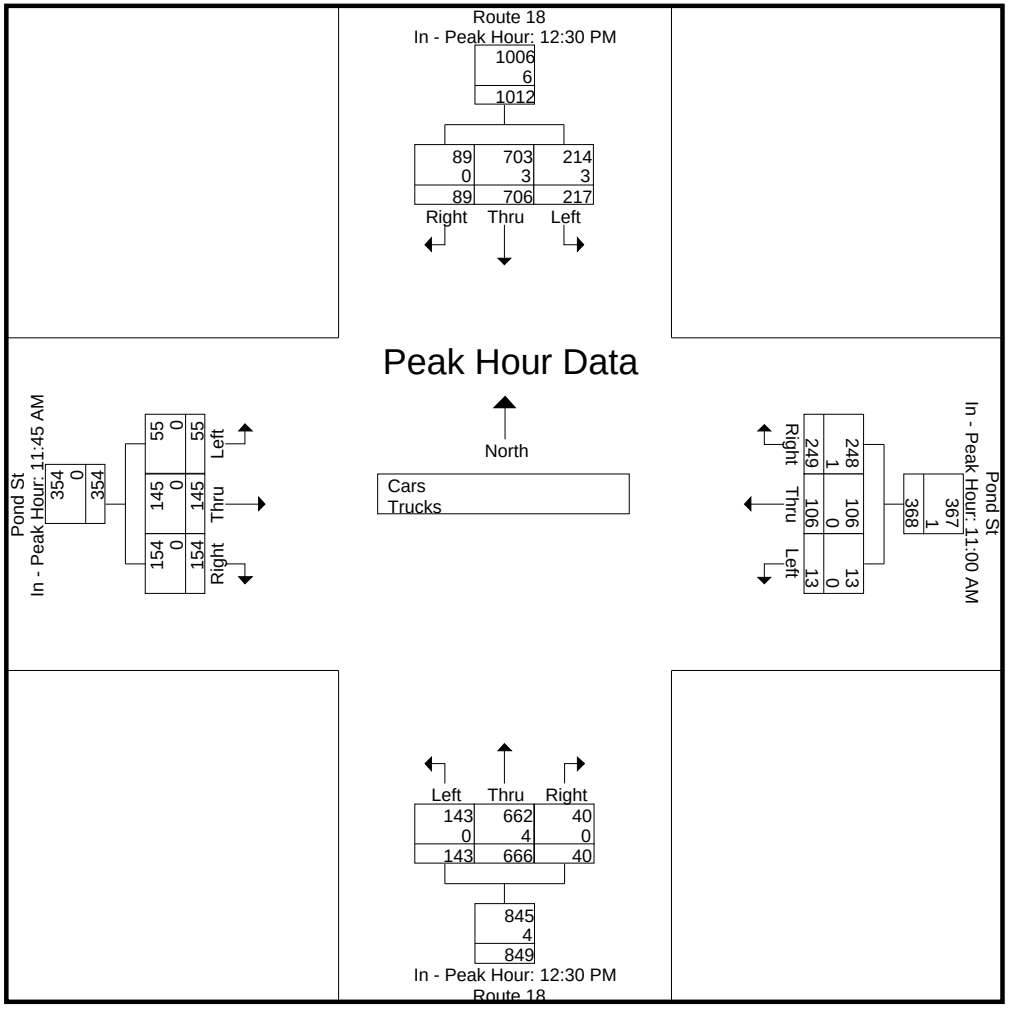

Accurate Counts

978-664-2565

N/S Street : Route 18
E/W Street: Pond Street
City/State : Weymouth, MA
Weather : Clear

File Name : 842600S1
Site Code : 84260001
Start Date : 11/23/2019
Page No : 5

Groups Printed- Cars

	Route 18 From North			Pond St From East			Route 18 From South			Pond St From West			
Start Time	Left	Thru	Right	Left	Thru	Right	Left	Thru	Right	Left	Thru	Right	Int. Total
11:00 AM	49	151	17	3	18	69	27	172	12	14	33	37	602
11:15 AM	48	155	31	3	29	58	22	170	8	11	31	34	600
11:30 AM	54	154	26	2	29	56	22	153	4	13	28	46	587
11:45 AM	60	181	26	5	30	65	36	190	6	22	35	38	694
Total	211	641	100	13	106	248	107	685	30	60	127	155	2483
12:00 PM	54	145	21	3	18	59	32	138	9	7	34	37	557
12:15 PM	42	149	25	6	22	59	41	167	4	11	34	37	597
12:30 PM	55	174	18	5	30	60	28	168	10	15	42	42	647
12:45 PM	58	188	23	6	28	54	31	147	10	9	42	36	632
Total	209	656	87	20	98	232	132	620	33	42	152	152	2433
01:00 PM	40	198	28	1	21	57	54	167	12	9	26	23	636
01:15 PM	61	143	20	9	23	60	30	180	8	17	27	34	612
01:30 PM	57	135	27	7	25	56	35	134	10	11	31	45	573
01:45 PM	57	149	17	5	29	71	23	137	11	9	28	34	570
Total	215	625	92	22	98	244	142	618	41	46	112	136	2391
Grand Total	635	1922	279	55	302	724	381	1923	104	148	391	443	7307
Apprch %	22.4	67.8	9.8	5.1	27.9	67	15.8	79.9	4.3	15.1	39.8	45.1	
Total %	8.7	26.3	3.8	0.8	4.1	9.9	5.2	26.3	1.4	2	5.4	6.1	

Accurate Counts

978-664-2565

N/S Street : Route 18
E/W Street: Pond Street
City/State : Weymouth, MA
Weather : Clear

File Name : 842600S1
Site Code : 84260001
Start Date : 11/23/2019
Page No : 6

	Route 18 From North				Pond St From East				Route 18 From South				Pond St From West				
Start Time	Left	Thru	Right	App. Total	Left	Thru	Right	App. Total	Left	Thru	Right	App. Total	Left	Thru	Right	App. Total	Int. Total
Peak Hour Analysis From 11:00 AM to 01:45 PM - Peak 1 of 1																	
Peak Hour for Entire Intersection Begins at 12:30 PM																	
12:30 PM	55	174	18	247	5	**30**	**60**	**95**	28	168	10	206	15	**42**	**42**	**99**	**647**
12:45 PM	58	188	23	**269**	6	28	54	88	31	147	10	188	9	42	36	87	632
01:00 PM	40	**198**	**28**	266	1	21	57	79	**54**	167	**12**	**233**	9	26	23	58	636
01:15 PM	**61**	143	20	224	**9**	23	60	92	30	**180**	8	218	**17**	27	34	78	612
Total Volume	214	703	89	1006	21	102	231	354	143	662	40	845	50	137	135	322	2527
% App. Total	21.3	69.9	8.8		5.9	28.8	65.3		16.9	78.3	4.7		15.5	42.5	41.9		
PHF	.877	.888	.795	.935	.583	.850	.963	.932	.662	.919	.833	.907	.735	.815	.804	.813	.976

Accurate Counts

978-664-2565

N/S Street : Route 18
E/W Street: Pond Street
City/State : Weymouth, MA
Weather : Clear

File Name : 842600S1
Site Code : 84260001
Start Date : 11/23/2019
Page No : 7

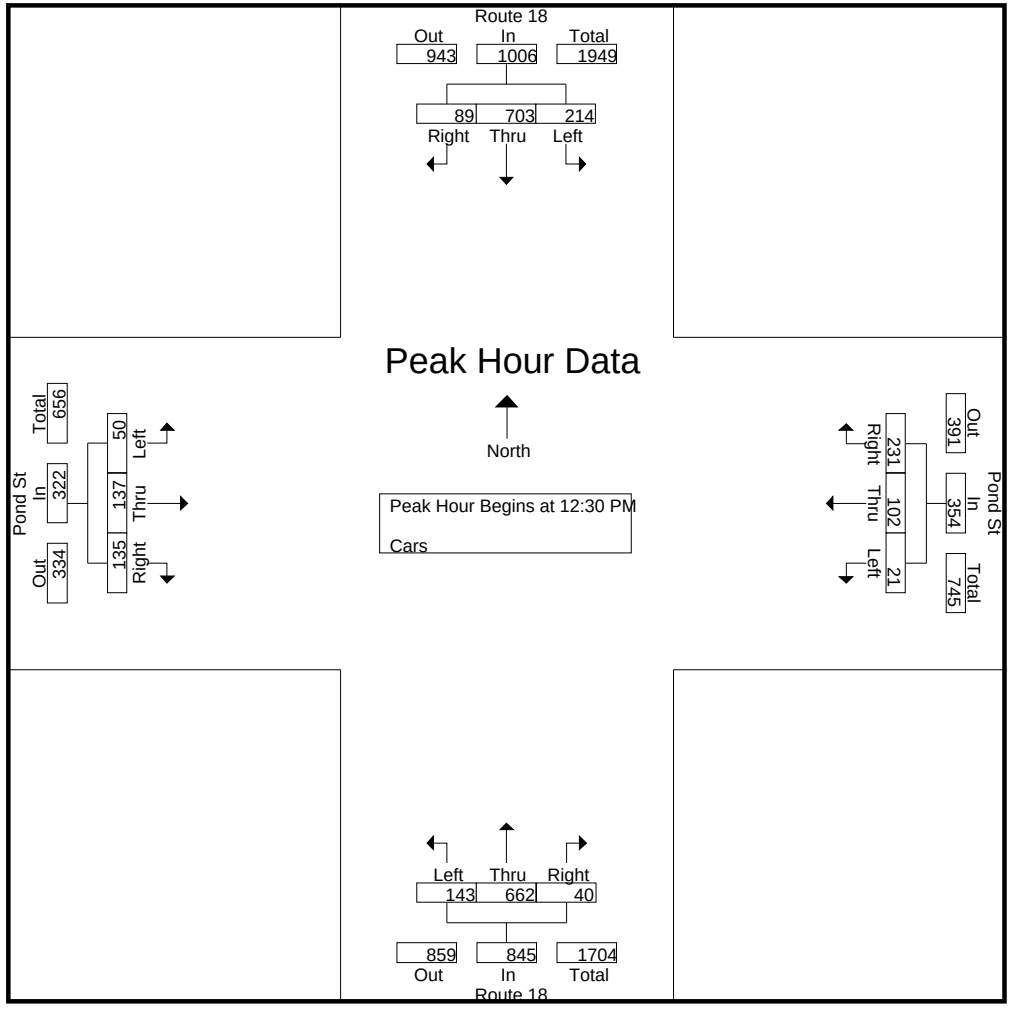

Peak Hour Analysis From 11:00 AM to 01:45 PM - Peak 1 of 1

Peak Hour for Each Approach Begins at:

	12:30 PM				11:00 AM				12:30 PM				11:45 AM			
+0 mins.	55	174	18	247	3	18	**69**	90	28	168	10	206	**22**	35	38	95
+15 mins.	58	188	23	**269**	3	29	58	90	31	147	10	188	7	34	37	78
+30 mins.	40	**198**	**28**	266	2	29	56	87	**54**	167	**12**	**233**	11	34	37	82
+45 mins.	**61**	143	20	224	**5**	**30**	65	**100**	30	**180**	8	218	15	**42**	**42**	**99**
Total Volume	214	703	89	1006	13	106	248	367	143	662	40	845	55	145	154	354
% App. Total	21.3	69.9	8.8		3.5	28.9	67.6		16.9	78.3	4.7		15.5	41	43.5	
PHF	.877	.888	.795	.935	.650	.883	.899	.918	.662	.919	.833	.907	.625	.863	.917	.894

Accurate Counts

978-664-2565

N/S Street : Route 18
E/W Street: Pond Street
City/State : Weymouth, MA
Weather : Clear

File Name : 842600S1
Site Code : 84260001
Start Date : 11/23/2019
Page No : 8

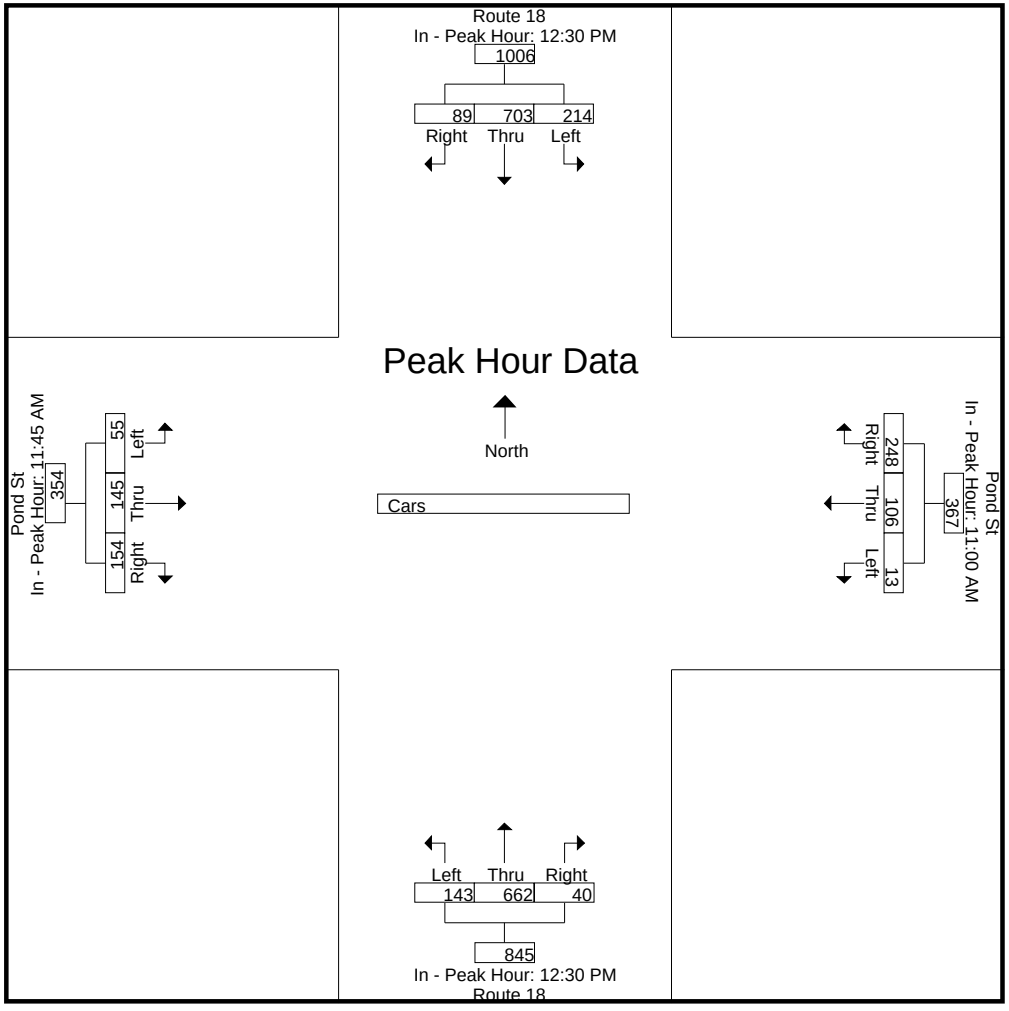

Accurate Counts

978-664-2565

N/S Street : Route 18
E/W Street: Pond Street
City/State : Weymouth, MA
Weather : Clear

File Name : 842600S1
Site Code : 84260001
Start Date : 11/23/2019
Page No : 9

Groups Printed- Trucks

	Route 18 From North			Pond St From East			Route 18 From South			Pond St From West			
Start Time	Left	Thru	Right	Left	Thru	Right	Left	Thru	Right	Left	Thru	Right	Int. Total
11:00 AM	1	0	0	0	0	0	0	0	0	0	0	0	1
11:15 AM	2	1	0	0	0	1	0	3	0	0	0	0	7
11:30 AM	1	0	0	0	0	0	0	2	0	0	0	1	4
11:45 AM	0	0	0	0	0	0	0	2	0	0	0	0	2
Total	4	1	0	0	0	1	0	7	0	0	0	1	14
12:00 PM	0	5	0	0	0	0	0	0	0	0	0	0	5
12:15 PM	2	2	0	1	0	0	0	0	0	0	0	0	5
12:30 PM	1	0	0	0	0	0	0	2	0	0	0	0	3
12:45 PM	0	1	0	0	0	0	0	0	0	0	0	0	1
Total	3	8	0	1	0	0	0	2	0	0	0	0	14
01:00 PM	0	1	0	0	0	0	0	2	0	0	0	0	3
01:15 PM	2	1	0	0	0	1	0	0	0	0	0	0	4
01:30 PM	2	1	0	0	0	0	0	1	0	0	0	0	4
01:45 PM	0	0	0	0	0	0	0	1	0	0	0	0	1
Total	4	3	0	0	0	1	0	4	0	0	0	0	12
Grand Total	11	12	0	1	0	2	0	13	0	0	0	1	40
Apprch %	47.8	52.2	0	33.3	0	66.7	0	100	0	0	0	100	
Total %	27.5	30	0	2.5	0	5	0	32.5	0	0	0	2.5	

Accurate Counts

978-664-2565

N/S Street : Route 18
E/W Street: Pond Street
City/State : Weymouth, MA
Weather : Clear

File Name : 842600S1
Site Code : 84260001
Start Date : 11/23/2019
Page No : 10

	Route 18 From North				Pond St From East				Route 18 From South				Pond St From West				
Start Time	Left	Thru	Right	App. Total	Left	Thru	Right	App. Total	Left	Thru	Right	App. Total	Left	Thru	Right	App. Total	Int. Total
Peak Hour Analysis From 11:00 AM to 01:45 PM - Peak 1 of 1																	
Peak Hour for Entire Intersection Begins at 11:15 AM																	
11:15 AM	**2**	1	0	3	0	0	**1**	**1**	0	**3**	0	**3**	0	0	0	0	**7**
11:30 AM	1	0	0	1	0	0	0	0	0	2	0	2	0	0	**1**	**1**	4
11:45 AM	0	0	0	0	0	0	0	0	0	2	0	2	0	0	0	0	2
12:00 PM	0	**5**	0	**5**	0	0	0	0	0	0	0	0	0	0	0	0	5
Total Volume	3	6	0	9	0	0	1	1	0	7	0	7	0	0	1	1	18
% App. Total	33.3	66.7	0		0	0	100		0	100	0		0	0	100		
PHF	.375	.300	.000	.450	.000	.000	.250	.250	.000	.583	.000	.583	.000	.000	.250	.250	.643

Accurate Counts

978-664-2565

N/S Street : Route 18
E/W Street: Pond Street
City/State : Weymouth, MA
Weather : Clear

File Name : 842600S1
Site Code : 84260001
Start Date : 11/23/2019
Page No : 11

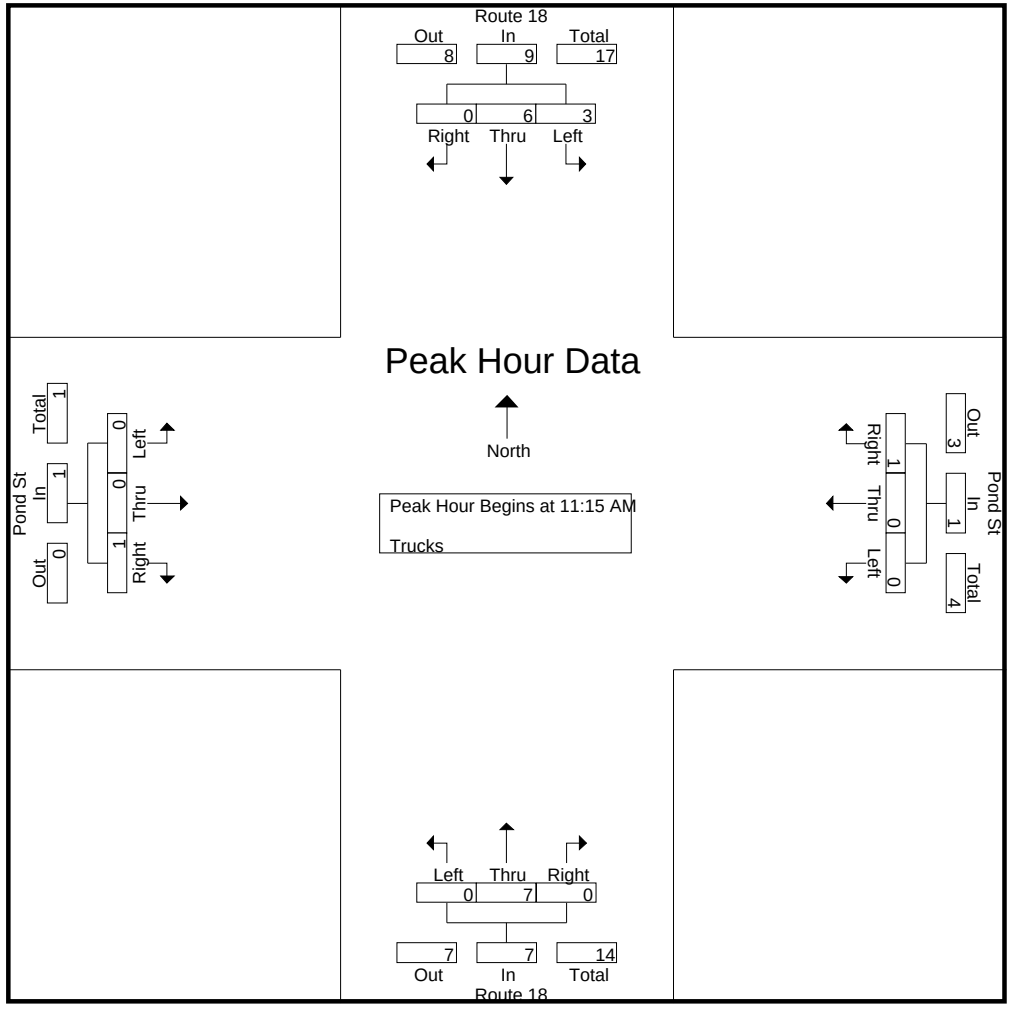

Peak Hour Analysis From 11:00 AM to 01:45 PM - Peak 1 of 1

Peak Hour for Each Approach Begins at:

	12:00 PM				11:00 AM				11:00 AM				11:00 AM			
+0 mins.	0	**5**	0	**5**	0	0	0	0	0	0	0	0	0	0	0	0
+15 mins.	**2**	2	0	4	0	0	**1**	**1**	0	**3**	0	**3**	0	0	0	0
+30 mins.	1	0	0	1	0	0	0	0	0	2	0	2	0	0	**1**	**1**
+45 mins.	0	1	0	1	0	0	0	0	0	2	0	2	0	0	0	0
Total Volume	3	8	0	11	0	0	1	1	0	7	0	7	0	0	1	1
% App. Total	27.3	72.7	0		0	0	100		0	100	0		0	0	100	
PHF	.375	.400	.000	.550	.000	.000	.250	.250	.000	.583	.000	.583	.000	.000	.250	.250

Accurate Counts

978-664-2565

N/S Street : Route 18
E/W Street: Pond Street
City/State : Weymouth, MA
Weather : Clear

File Name : 842600S1
Site Code : 84260001
Start Date : 11/23/2019
Page No : 12

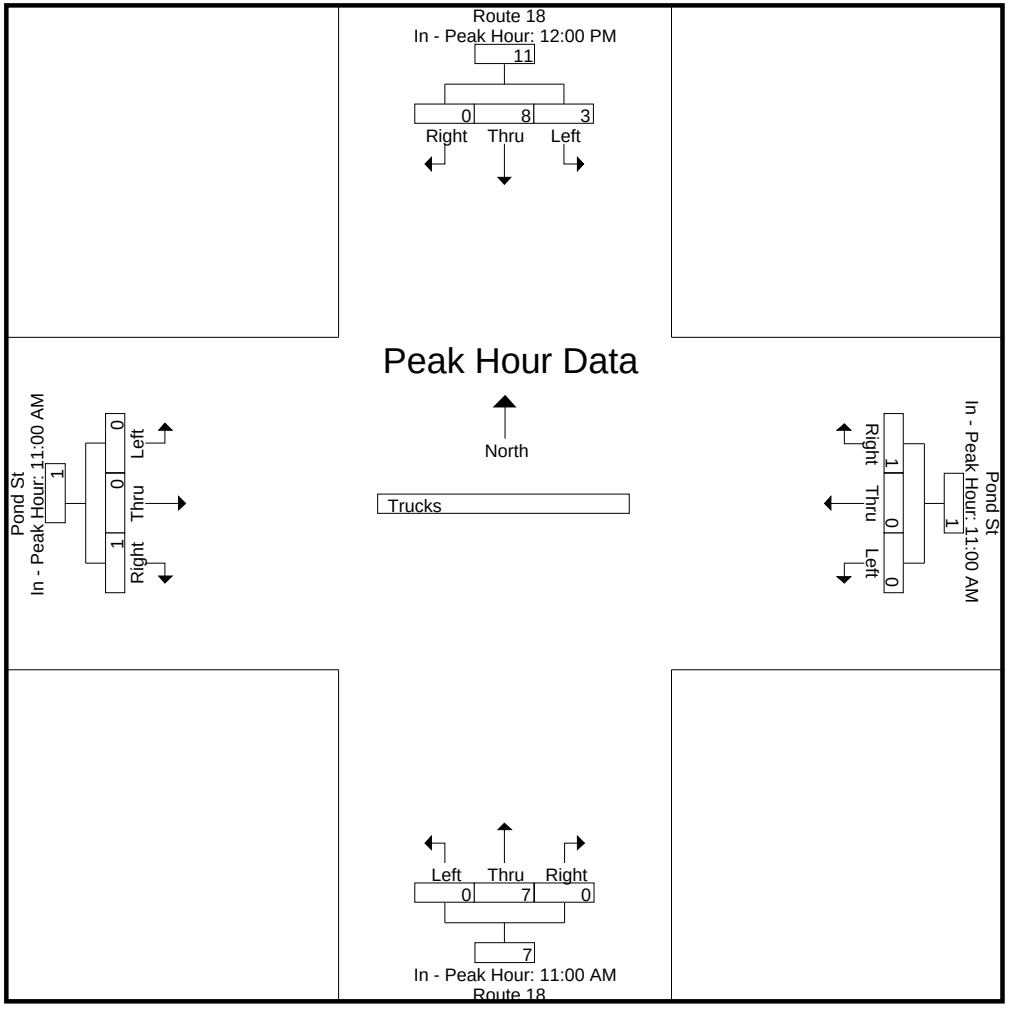

Accurate Counts

978-664-2565

N/S Street : Route 18
E/W Street: Pond Street
City/State : Weymouth, MA
Weather : Clear

File Name : 842600S1
Site Code : 84260001
Start Date : 11/23/2019
Page No : 13

Groups Printed- Bikes Peds

	Route 18 From North				Pond St From East				Route 18 From South				Pond St From West						
Start Time	Left	Thru	Right	Peds	Left	Thru	Right	Peds	Left	Thru	Right	Peds	Left	Thru	Right	Peds	Exclu. Total	Inclu. Total	Int. Total
11:00 AM	0	0	0	0	0	0	0	0	0	0	0	0	0	0	0	0	0	0	0
11:15 AM	0	0	0	0	0	0	0	0	0	0	0	0	0	0	0	0	0	0	0
11:30 AM	0	0	0	0	0	0	0	0	0	0	0	0	0	0	0	0	0	0	0
11:45 AM	0	0	0	0	0	0	0	0	0	0	0	0	0	0	0	0	0	0	0
Total	0	0	0	0	0	0	0	0	0	0	0	0	0	0	0	0	0	0	0
12:00 PM	0	0	0	0	0	0	0	0	0	0	0	0	0	0	0	0	0	0	0
12:15 PM	0	0	0	0	0	0	0	0	0	0	0	0	0	0	0	0	0	0	0
12:30 PM	0	0	0	0	0	0	0	0	0	0	0	0	0	0	0	0	0	0	0
12:45 PM	0	0	0	0	0	0	0	0	0	0	0	0	0	0	0	0	0	0	0
Total	0	0	0	0	0	0	0	0	0	0	0	0	0	0	0	0	0	0	0
01:00 PM	0	0	0	0	0	0	0	0	0	0	0	0	0	0	0	0	0	0	0
01:15 PM	0	0	0	1	0	0	0	0	0	0	0	0	0	0	0	0	1	0	1
01:30 PM	0	0	0	0	0	0	0	0	0	0	0	0	0	0	0	0	0	0	0
01:45 PM	0	0	0	0	0	0	0	0	0	0	0	0	0	0	0	0	0	0	0
Total	0	0	0	1	0	0	0	0	0	0	0	0	0	0	0	0	1	0	1
Grand Total	0	0	0	1	0	0	0	0	0	0	0	0	0	0	0	0	1	0	1
Apprch %	0	0	0		0	0	0		0	0	0		0	0	0				
Total %																	100	0	

Accurate Counts

978-664-2565

N/S Street : Route 18
E/W Street: Pond Street
City/State : Weymouth, MA
Weather : Clear

File Name : 842600S1
Site Code : 84260001
Start Date : 11/23/2019
Page No : 14

	Route 18 From North				Pond St From East				Route 18 From South				Pond St From West				
Start Time	Left	Thru	Right	App. Total	Left	Thru	Right	App. Total	Left	Thru	Right	App. Total	Left	Thru	Right	App. Total	Int. Total
Peak Hour Analysis From 11:00 AM to 01:45 PM - Peak 1 of 1																	
Peak Hour for Entire Intersection Begins at 11:00 AM																	
11:00 AM	0	0	0	0	0	0	0	0	0	0	0	0	0	0	0	0	0
11:15 AM	0	0	0	0	0	0	0	0	0	0	0	0	0	0	0	0	0
11:30 AM	0	0	0	0	0	0	0	0	0	0	0	0	0	0	0	0	0
11:45 AM	0	0	0	0	0	0	0	0	0	0	0	0	0	0	0	0	0
Total Volume	0	0	0	0	0	0	0	0	0	0	0	0	0	0	0	0	0
% App. Total	0	0	0		0	0	0		0	0	0		0	0	0		
PHF	.000	.000	.000	.000	.000	.000	.000	.000	.000	.000	.000	.000	.000	.000	.000	.000	.000

Accurate Counts

978-664-2565

N/S Street : Route 18
E/W Street: Pond Street
City/State : Weymouth, MA
Weather : Clear

File Name : 842600S1
Site Code : 84260001
Start Date : 11/23/2019
Page No : 15

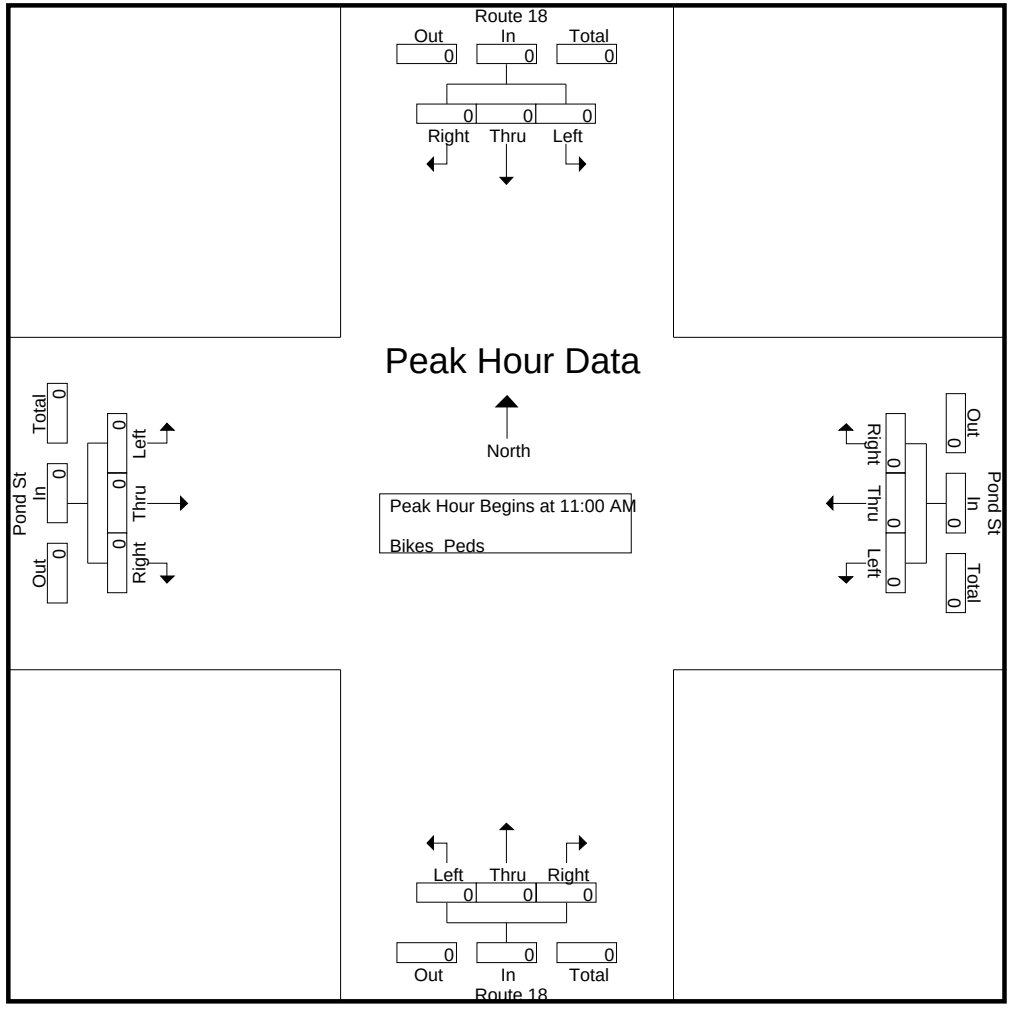

Peak Hour Analysis From 11:00 AM to 01:45 PM - Peak 1 of 1

Peak Hour for Each Approach Begins at:

	11:00 AM				11:00 AM				11:00 AM				11:00 AM			
+0 mins.	0	0	0	0	0	0	0	0	0	0	0	0	0	0	0	0
+15 mins.	0	0	0	0	0	0	0	0	0	0	0	0	0	0	0	0
+30 mins.	0	0	0	0	0	0	0	0	0	0	0	0	0	0	0	0
+45 mins.	0	0	0	0	0	0	0	0	0	0	0	0	0	0	0	0
Total Volume	0	0	0	0	0	0	0	0	0	0	0	0	0	0	0	0
% App. Total	0	0	0		0	0	0		0	0	0		0	0	0	
PHF	.000	.000	.000	.000	.000	.000	.000	.000	.000	.000	.000	.000	.000	.000	.000	.000

Accurate Counts

978-664-2565

N/S Street : Route 18
E/W Street: Pond Street
City/State : Weymouth, MA
Weather : Clear

File Name : 842600S1
Site Code : 84260001
Start Date : 11/23/2019
Page No : 16

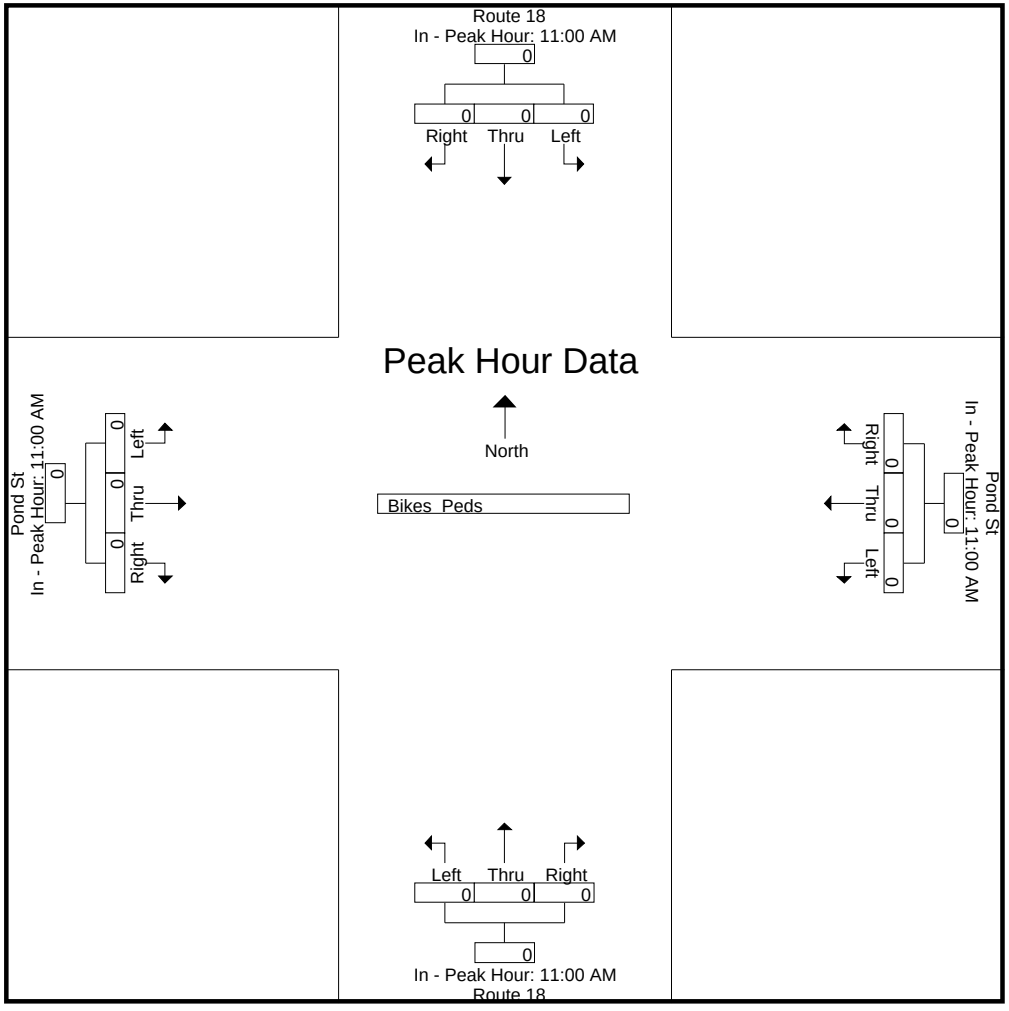

Accurate Counts

978-664-2565

N/S Street : Route 18
E/W Street: Trotter Road
City/State : Weymouth, MA
Weather : Clear

File Name : 84260002
Site Code : 84260002
Start Date : 11/21/2019
Page No : 1

Groups Printed- Cars - Trucks

	Route 18 From North		Trotter Rd From East		Route 18 From South		
Start Time	Left	Thru	Left	Right	Thru	Right	Int. Total
07:00 AM	16	123	24	12	236	15	426
07:15 AM	9	118	17	13	216	24	397
07:30 AM	51	180	23	30	236	60	580
07:45 AM	44	157	29	15	258	52	555
Total	120	578	93	70	946	151	1958
08:00 AM	31	133	22	19	224	44	473
08:15 AM	13	118	26	21	208	21	407
08:30 AM	15	132	15	15	218	27	422
08:45 AM	16	99	18	17	173	15	338
Total	75	482	81	72	823	107	1640
Grand Total	195	1060	174	142	1769	258	3598
Apprch %	15.5	84.5	55.1	44.9	87.3	12.7	
Total %	5.4	29.5	4.8	3.9	49.2	7.2	
Cars	193	1030	173	140	1731	256	3523
% Cars	99	97.2	99.4	98.6	97.9	99.2	97.9
Trucks	2	30	1	2	38	2	75
% Trucks	1	2.8	0.6	1.4	2.1	0.8	2.1

Accurate Counts

978-664-2565

N/S Street : Route 18
E/W Street: Trotter Road
City/State : Weymouth, MA
Weather : Clear

File Name : 84260002
Site Code : 84260002
Start Date : 11/21/2019
Page No : 2

	Route 18 From North			Trotter Rd From East			Route 18 From South			
Start Time	Left	Thru	App. Total	Left	Right	App. Total	Thru	Right	App. Total	Int. Total
Peak Hour Analysis From 07:00 AM to 08:45 AM - Peak 1 of 1										
Peak Hour for Entire Intersection Begins at 07:30 AM										
07:30 AM	**51**	**180**	**231**	23	**30**	**53**	236	**60**	296	**580**
07:45 AM	44	157	201	**29**	15	44	**258**	52	**310**	555
08:00 AM	31	133	164	22	19	41	224	44	268	473
08:15 AM	13	118	131	26	21	47	208	21	229	407
Total Volume	139	588	727	100	85	185	926	177	1103	2015
% App. Total	19.1	80.9		54.1	45.9		84	16		
PHF	.681	.817	.787	.862	.708	.873	.897	.738	.890	.869
Cars	138	570	708	99	83	182	913	176	1089	1979
% Cars	99.3	96.9	97.4	99.0	97.6	98.4	98.6	99.4	98.7	98.2
Trucks	1	18	19	1	2	3	13	1	14	36
% Trucks	0.7	3.1	2.6	1.0	2.4	1.6	1.4	0.6	1.3	1.8

Accurate Counts

978-664-2565

N/S Street : Route 18
E/W Street: Trotter Road
City/State : Weymouth, MA
Weather : Clear

File Name : 84260002
Site Code : 84260002
Start Date : 11/21/2019
Page No : 3

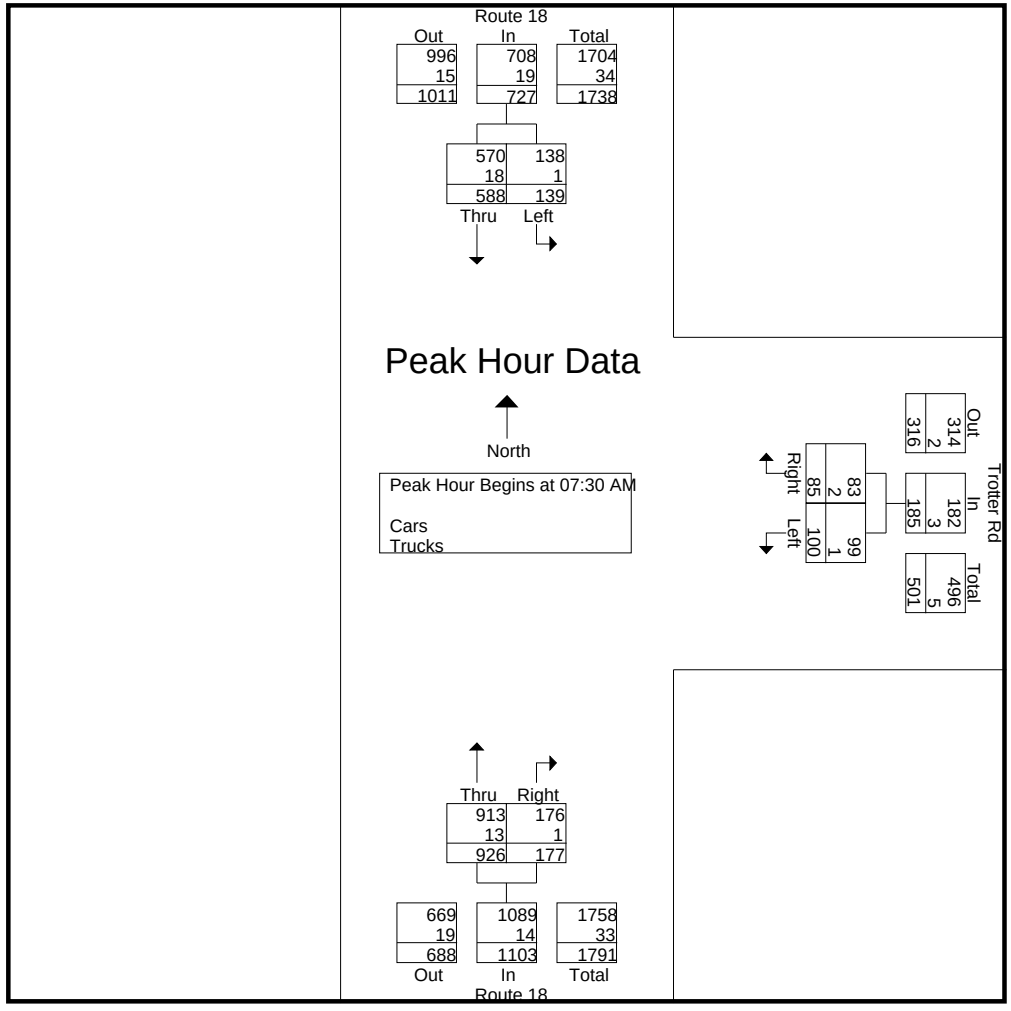

Peak Hour Analysis From 07:00 AM to 08:45 AM - Peak 1 of 1

Peak Hour for Each Approach Begins at:

	07:30 AM			07:30 AM			07:15 AM		
+0 mins.	**51**	**180**	**231**	23	**30**	**53**	216	24	240
+15 mins.	44	157	201	**29**	15	44	236	**60**	296
+30 mins.	31	133	164	22	19	41	**258**	52	**310**
+45 mins.	13	118	131	26	21	47	224	44	268
Total Volume	139	588	727	100	85	185	934	180	1114

Accurate Counts

978-664-2565

% App. Total	19.1	80.9		54.1	45.9		83.8	16.2	
PHF	.681	.817	.787	.862	.708	.873	.905	.750	.898
Cars	138	570	708	99	83	182	919	180	1099
% Cars	99.3	96.9	97.4	99	97.6	98.4	98.4	100	98.7
Trucks	1	18	19	1	2	3	15	0	15
% Trucks	0.7	3.1	2.6	1	2.4	1.6	1.6	0	1.3

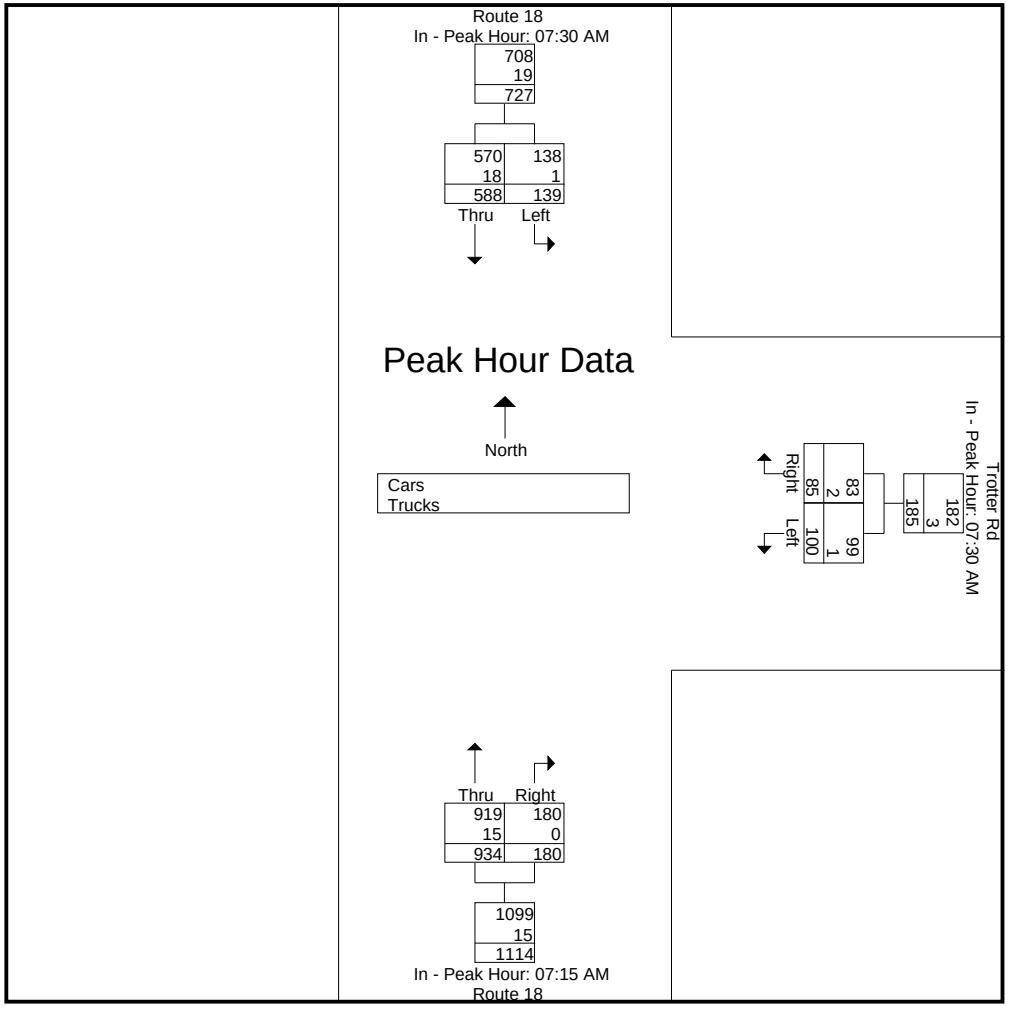

Accurate Counts

978-664-2565

N/S Street : Route 18
E/W Street: Trotter Road
City/State : Weymouth, MA
Weather : Clear

File Name : 84260002
Site Code : 84260002
Start Date : 11/21/2019
Page No : 5

Groups Printed- Cars

	Route 18 From North		Trotter Rd From East		Route 18 From South		
Start Time	Left	Thru	Left	Right	Thru	Right	Int. Total
07:00 AM	16	120	24	12	227	14	413
07:15 AM	9	116	17	13	210	24	389
07:30 AM	51	174	23	30	235	60	573
07:45 AM	44	154	29	15	253	52	547
Total	120	564	93	70	925	150	1922
08:00 AM	30	131	21	19	221	44	466
08:15 AM	13	111	26	19	204	20	393
08:30 AM	15	126	15	15	209	27	407
08:45 AM	15	98	18	17	172	15	335
Total	73	466	80	70	806	106	1601
Grand Total	193	1030	173	140	1731	256	3523
Apprch %	15.8	84.2	55.3	44.7	87.1	12.9	
Total %	5.5	29.2	4.9	4	49.1	7.3	

Accurate Counts

978-664-2565

N/S Street : Route 18
E/W Street: Trotter Road
City/State : Weymouth, MA
Weather : Clear

File Name : 84260002
Site Code : 84260002
Start Date : 11/21/2019
Page No : 6

	Route 18 From North			Trotter Rd From East			Route 18 From South			
Start Time	Left	Thru	App. Total	Left	Right	App. Total	Thru	Right	App. Total	Int. Total
Peak Hour Analysis From 07:00 AM to 08:45 AM - Peak 1 of 1										
Peak Hour for Entire Intersection Begins at 07:30 AM										
07:30 AM	**51**	**174**	**225**	23	**30**	**53**	235	**60**	295	**573**
07:45 AM	44	154	198	**29**	15	44	**253**	52	**305**	547
08:00 AM	30	131	161	21	19	40	221	44	265	466
08:15 AM	13	111	124	26	19	45	204	20	224	393
Total Volume	138	570	708	99	83	182	913	176	1089	1979
% App. Total	19.5	80.5		54.4	45.6		83.8	16.2		
PHF	.676	.819	.787	.853	.692	.858	.902	.733	.893	.863

Accurate Counts

978-664-2565

N/S Street : Route 18
E/W Street: Trotter Road
City/State : Weymouth, MA
Weather : Clear

File Name : 84260002
Site Code : 84260002
Start Date : 11/21/2019
Page No : 7

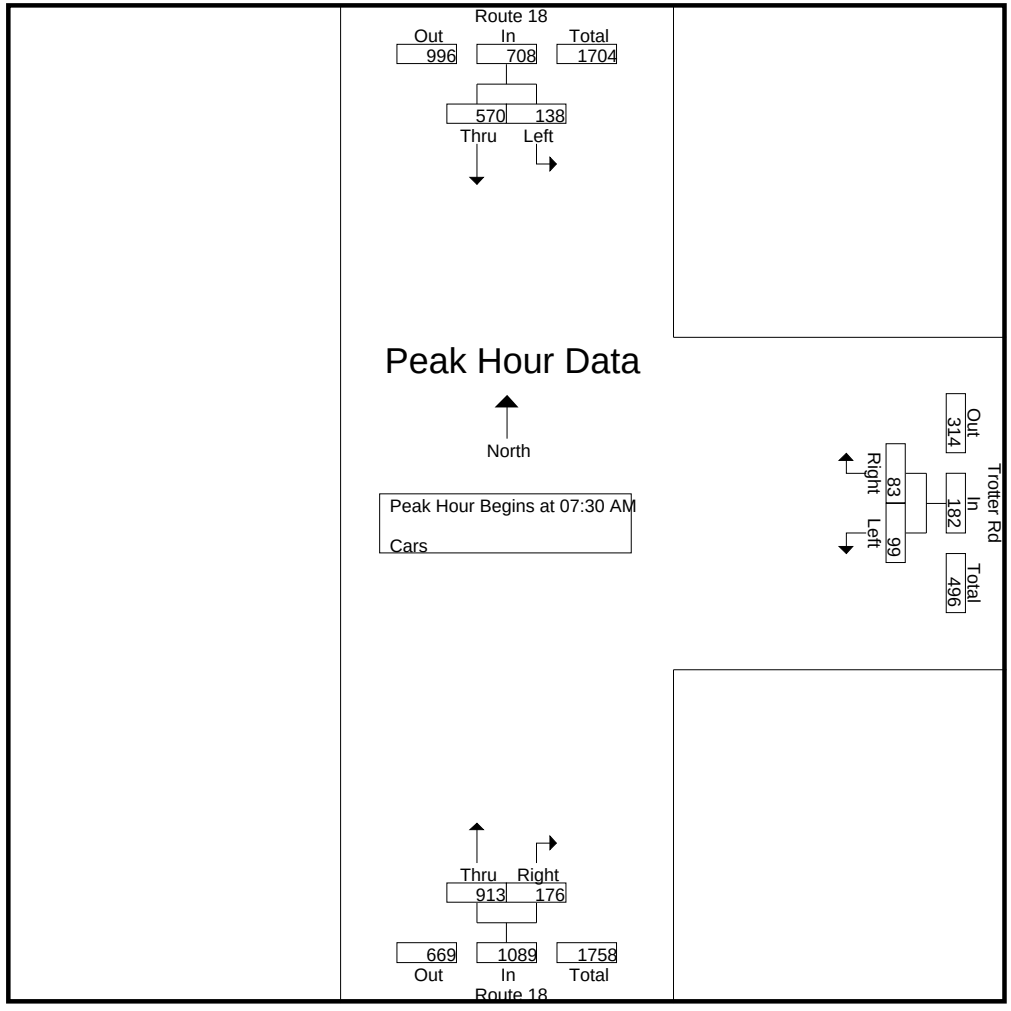

Peak Hour Analysis From 07:00 AM to 08:45 AM - Peak 1 of 1

Peak Hour for Each Approach Begins at:

	07:15 AM			07:30 AM			07:15 AM		
+0 mins.	9	116	125	23	**30**	**53**	210	24	234
+15 mins.	**51**	**174**	**225**	**29**	15	44	235	**60**	295
+30 mins.	44	154	198	21	19	40	**253**	52	**305**
+45 mins.	30	131	161	26	19	45	221	44	265
Total Volume	134	575	709	99	83	182	919	180	1099

Accurate Counts

978-664-2565

% App. Total	18.9	81.1		54.4	45.6		83.6	16.4	
PHF	.657	.826	.788	.853	.692	.858	.908	.750	.901

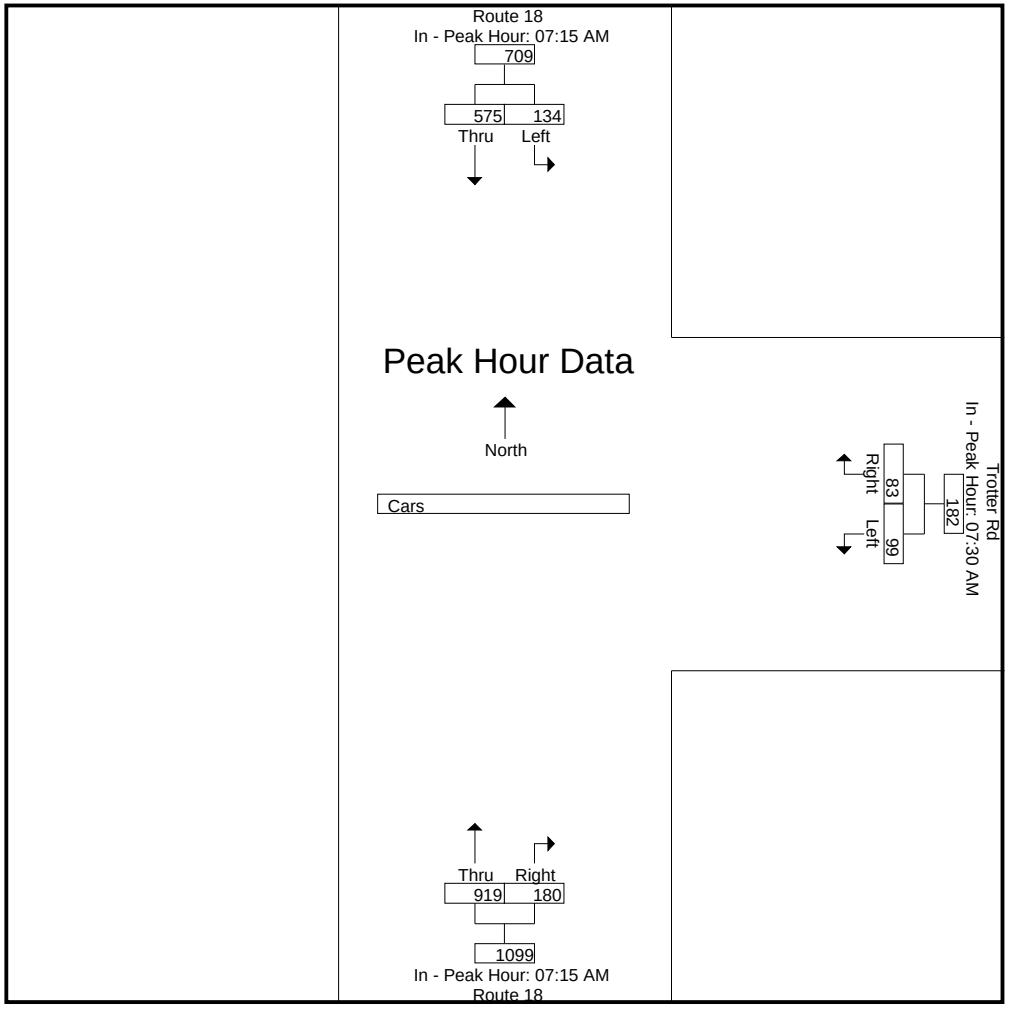

Accurate Counts

978-664-2565

N/S Street : Route 18
E/W Street: Trotter Road
City/State : Weymouth, MA
Weather : Clear

File Name : 84260002
Site Code : 84260002
Start Date : 11/21/2019
Page No : 9

Groups Printed- Trucks

	Route 18 From North		Trotter Rd From East		Route 18 From South		
Start Time	Left	Thru	Left	Right	Thru	Right	Int. Total
07:00 AM	0	3	0	0	9	1	13
07:15 AM	0	2	0	0	6	0	8
07:30 AM	0	6	0	0	1	0	7
07:45 AM	0	3	0	0	5	0	8
Total	0	14	0	0	21	1	36
08:00 AM	1	2	1	0	3	0	7
08:15 AM	0	7	0	2	4	1	14
08:30 AM	0	6	0	0	9	0	15
08:45 AM	1	1	0	0	1	0	3
Total	2	16	1	2	17	1	39
Grand Total	2	30	1	2	38	2	75
Apprch %	6.2	93.8	33.3	66.7	95	5	
Total %	2.7	40	1.3	2.7	50.7	2.7	

Accurate Counts

978-664-2565

N/S Street : Route 18
E/W Street: Trotter Road
City/State : Weymouth, MA
Weather : Clear

File Name : 84260002
Site Code : 84260002
Start Date : 11/21/2019
Page No : 10

	Route 18 From North			Trotter Rd From East			Route 18 From South			
Start Time	Left	Thru	App. Total	Left	Right	App. Total	Thru	Right	App. Total	Int. Total
Peak Hour Analysis From 07:00 AM to 08:45 AM - Peak 1 of 1										
Peak Hour for Entire Intersection Begins at 07:45 AM										
07:45 AM	0	3	3	0	0	0	5	0	5	8
08:00 AM	**1**	2	3	**1**	0	1	3	0	3	7
08:15 AM	0	**7**	**7**	0	**2**	**2**	4	**1**	5	14
08:30 AM	0	6	6	0	0	0	**9**	0	**9**	**15**
Total Volume	1	18	19	1	2	3	21	1	22	44
% App. Total	5.3	94.7		33.3	66.7		95.5	4.5		
PHF	.250	.643	.679	.250	.250	.375	.583	.250	.611	.733

Accurate Counts

978-664-2565

N/S Street : Route 18
E/W Street: Trotter Road
City/State : Weymouth, MA
Weather : Clear

File Name : 84260002
Site Code : 84260002
Start Date : 11/21/2019
Page No : 11

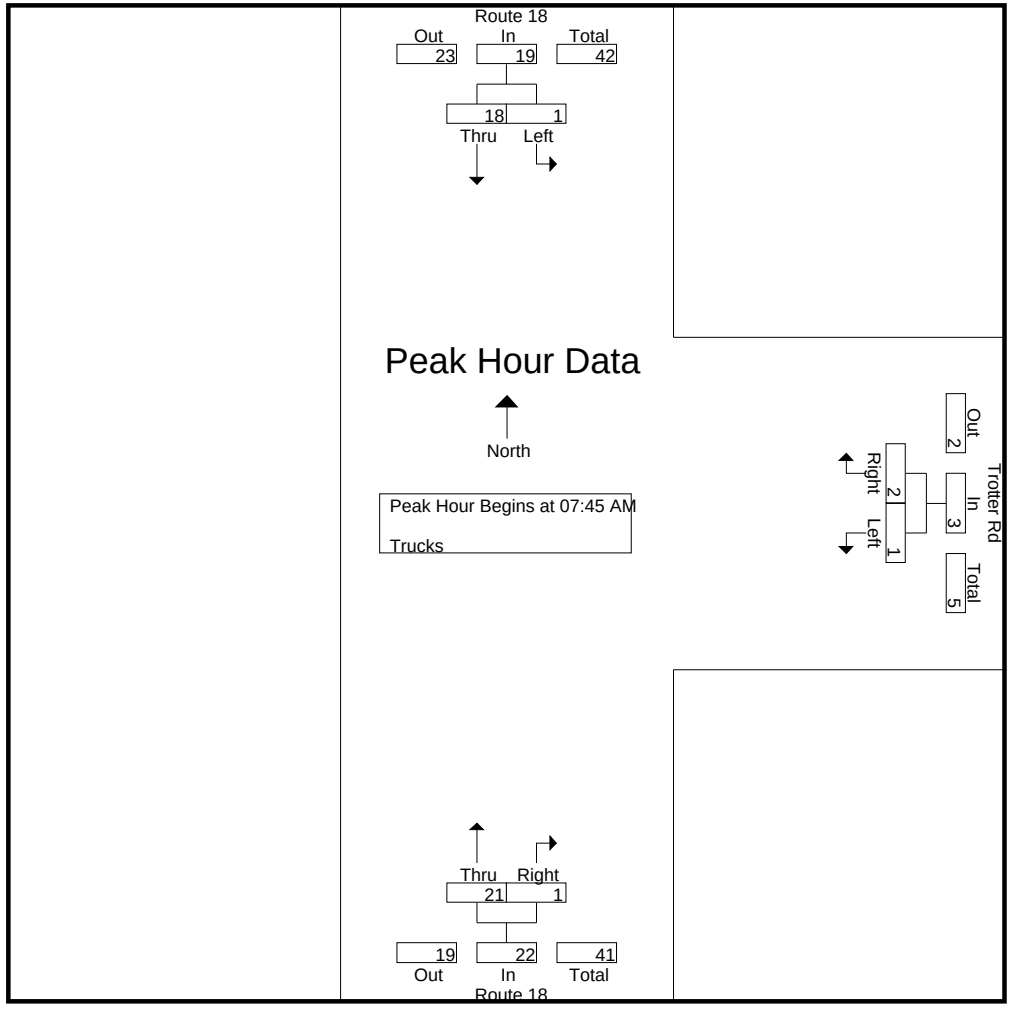

Peak Hour Analysis From 07:00 AM to 08:45 AM - Peak 1 of 1

Peak Hour for Each Approach Begins at:

	07:30 AM			07:30 AM			07:00 AM		
+0 mins.	0	6	6	0	0	0	**9**	**1**	**10**
+15 mins.	0	3	3	0	0	0	6	0	6
+30 mins.	**1**	2	3	**1**	0	1	1	0	1
+45 mins.	0	**7**	**7**	0	**2**	**2**	5	0	5
Total Volume	1	18	19	1	2	3	21	1	22

Accurate Counts

978-664-2565

% App. Total	5.3	94.7		33.3	66.7		95.5	4.5	
PHF	.250	.643	.679	.250	.250	.375	.583	.250	.550

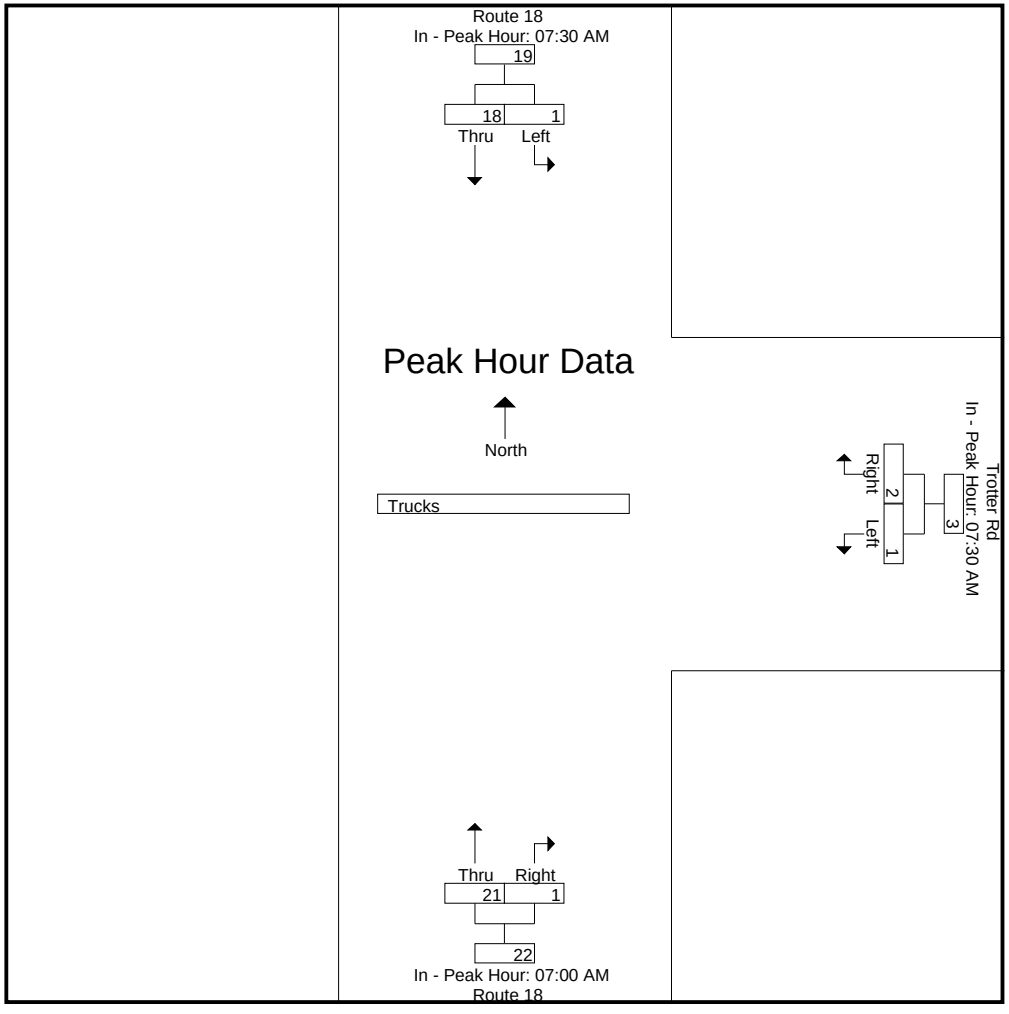

Accurate Counts

978-664-2565

N/S Street : Route 18
E/W Street: Trotter Road
City/State : Weymouth, MA
Weather : Clear

File Name : 84260002
Site Code : 84260002
Start Date : 11/21/2019
Page No : 13

Groups Printed- Bikes Peds

	Route 18 From North			Trotter Rd From East			Route 18 From South					
Start Time	Left	Thru	Peds	Left	Right	Peds	Thru	Right	Peds	Exclu. Total	Inclu. Total	Int. Total
07:00 AM	0	0	0	0	0	0	0	0	0	0	0	0
07:15 AM	0	0	0	0	0	0	0	0	0	0	0	0
07:30 AM	0	0	2	0	0	0	0	0	0	2	0	2
07:45 AM	0	1	1	0	0	0	0	0	0	1	1	2
Total	0	1	3	0	0	0	0	0	0	3	1	4
08:00 AM	0	0	1	0	0	2	0	0	0	3	0	3
08:15 AM	0	0	0	0	0	0	0	0	0	0	0	0
08:30 AM	0	0	0	0	0	0	0	0	0	0	0	0
08:45 AM	0	0	0	0	0	0	0	0	0	0	0	0
Total	0	0	1	0	0	2	0	0	0	3	0	3
Grand Total	0	1	4	0	0	2	0	0	0	6	1	7
Apprch %	0	100		0	0		0	0				
Total %	0	100		0	0		0	0		85.7	14.3	

Accurate Counts

978-664-2565

N/S Street : Route 18
E/W Street: Trotter Road
City/State : Weymouth, MA
Weather : Clear

File Name : 84260002
Site Code : 84260002
Start Date : 11/21/2019
Page No : 14

	Route 18 From North			Trotter Rd From East			Route 18 From South			
Start Time	Left	Thru	App. Total	Left	Right	App. Total	Thru	Right	App. Total	Int. Total
Peak Hour Analysis From 07:00 AM to 08:45 AM - Peak 1 of 1										
Peak Hour for Entire Intersection Begins at 07:00 AM										
07:00 AM	0	0	0	0	0	0	0	0	0	0
07:15 AM	0	0	0	0	0	0	0	0	0	0
07:30 AM	0	0	0	0	0	0	0	0	0	0
07:45 AM	0	**1**	**1**	0	0	0	0	0	0	**1**
Total Volume	0	1	1	0	0	0	0	0	0	1
% App. Total	0	100		0	0		0	0		
PHF	.000	.250	.250	.000	.000	.000	.000	.000	.000	.250

Accurate Counts

978-664-2565

N/S Street : Route 18
E/W Street: Trotter Road
City/State : Weymouth, MA
Weather : Clear

File Name : 84260002
Site Code : 84260002
Start Date : 11/21/2019
Page No : 15

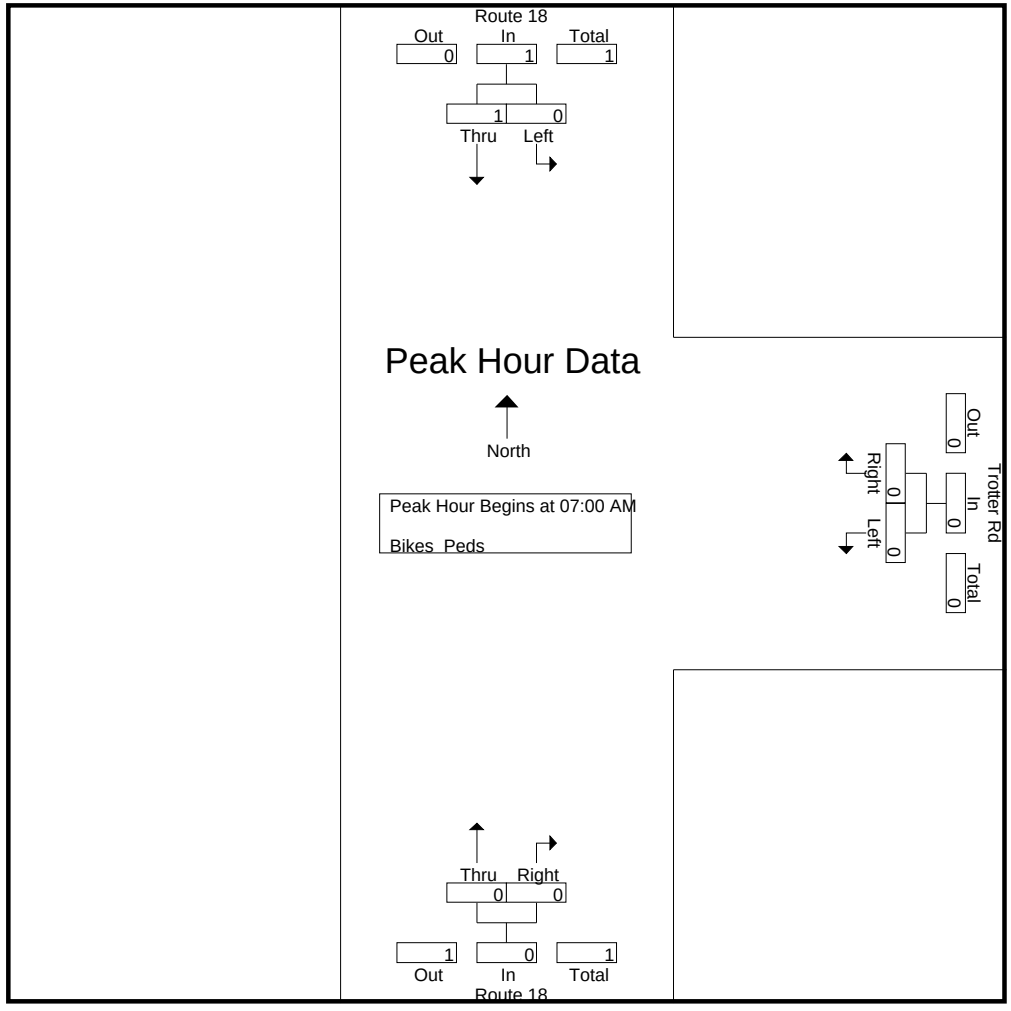

Peak Hour Analysis From 07:00 AM to 08:45 AM - Peak 1 of 1

Peak Hour for Each Approach Begins at:

	07:00 AM			07:00 AM			07:00 AM		
+0 mins.	0	0	0	0	0	0	0	0	0
+15 mins.	0	0	0	0	0	0	0	0	0
+30 mins.	0	0	0	0	0	0	0	0	0
+45 mins.	0	**1**	**1**	0	0	0	0	0	0
Total Volume	0	1	1	0	0	0	0	0	0

Accurate Counts

978-664-2565

% App. Total	0	100		0	0		0	0	
PHF	.000	.250	.250	.000	.000	.000	.000	.000	.000

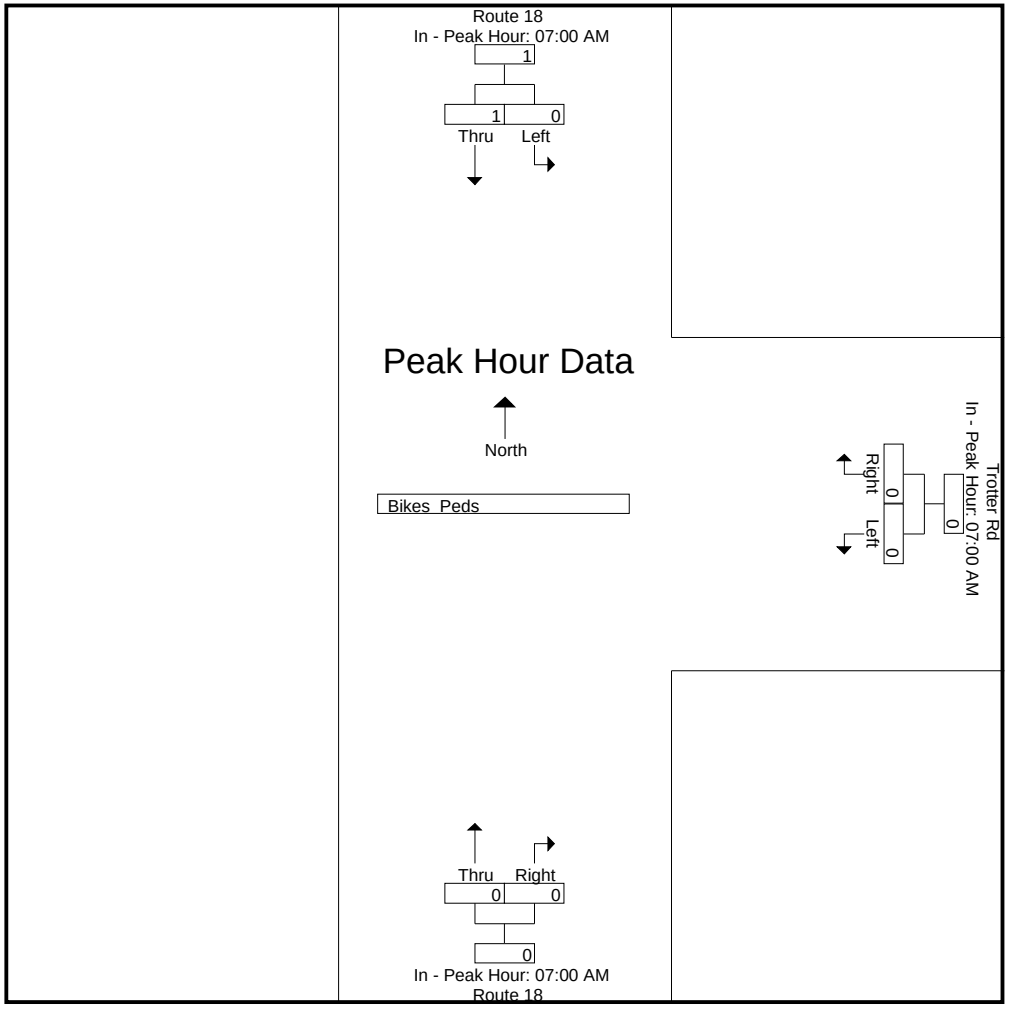

Accurate Counts

978-664-2565

N/S Street : Route 18
E/W Street: Trotter Road
City/State : Weymouth, MA
Weather : Clear

File Name : 84260002
Site Code : 84260002
Start Date : 11/21/2019
Page No : 1

Groups Printed- Cars - Trucks

	Route 18 From North		Trotter Rd From East		Route 18 From South		
Start Time	Left	Thru	Left	Right	Thru	Right	Int. Total
04:00 PM	21	234	37	16	171	30	509
04:15 PM	17	205	41	19	169	24	475
04:30 PM	13	231	35	19	188	28	514
04:45 PM	25	235	51	53	168	17	549
Total	76	905	164	107	696	99	2047
05:00 PM	20	225	48	22	185	22	522
05:15 PM	20	250	34	18	184	20	526
05:30 PM	24	214	73	45	148	23	527
05:45 PM	19	215	33	20	156	38	481
Total	83	904	188	105	673	103	2056
Grand Total	159	1809	352	212	1369	202	4103
Apprch %	8.1	91.9	62.4	37.6	87.1	12.9	
Total %	3.9	44.1	8.6	5.2	33.4	4.9	
Cars	156	1777	350	212	1361	201	4057
% Cars	98.1	98.2	99.4	100	99.4	99.5	98.9
Trucks	3	32	2	0	8	1	46
% Trucks	1.9	1.8	0.6	0	0.6	0.5	1.1

Accurate Counts

978-664-2565

N/S Street : Route 18
E/W Street: Trotter Road
City/State : Weymouth, MA
Weather : Clear

File Name : 84260002
Site Code : 84260002
Start Date : 11/21/2019
Page No : 2

	Route 18 From North			Trotter Rd From East			Route 18 From South			
Start Time	Left	Thru	App. Total	Left	Right	App. Total	Thru	Right	App. Total	Int. Total
Peak Hour Analysis From 04:00 PM to 05:45 PM - Peak 1 of 1										
Peak Hour for Entire Intersection Begins at 04:45 PM										
04:45 PM	**25**	235	260	51	**53**	104	168	17	185	**549**
05:00 PM	20	225	245	48	22	70	**185**	22	**207**	522
05:15 PM	20	**250**	**270**	34	18	52	184	20	204	526
05:30 PM	24	214	238	**73**	45	**118**	148	**23**	171	527
Total Volume	89	924	1013	206	138	344	685	82	767	2124
% App. Total	8.8	91.2		59.9	40.1		89.3	10.7		
PHF	.890	.924	.938	.705	.651	.729	.926	.891	.926	.967
Cars	89	912	1001	204	138	342	682	82	764	2107
% Cars	100	98.7	98.8	99.0	100	99.4	99.6	100	99.6	99.2
Trucks	0	12	12	2	0	2	3	0	3	17
% Trucks	0	1.3	1.2	1.0	0	0.6	0.4	0	0.4	0.8

Accurate Counts

978-664-2565

N/S Street : Route 18
E/W Street: Trotter Road
City/State : Weymouth, MA
Weather : Clear

File Name : 84260002
Site Code : 84260002
Start Date : 11/21/2019
Page No : 3

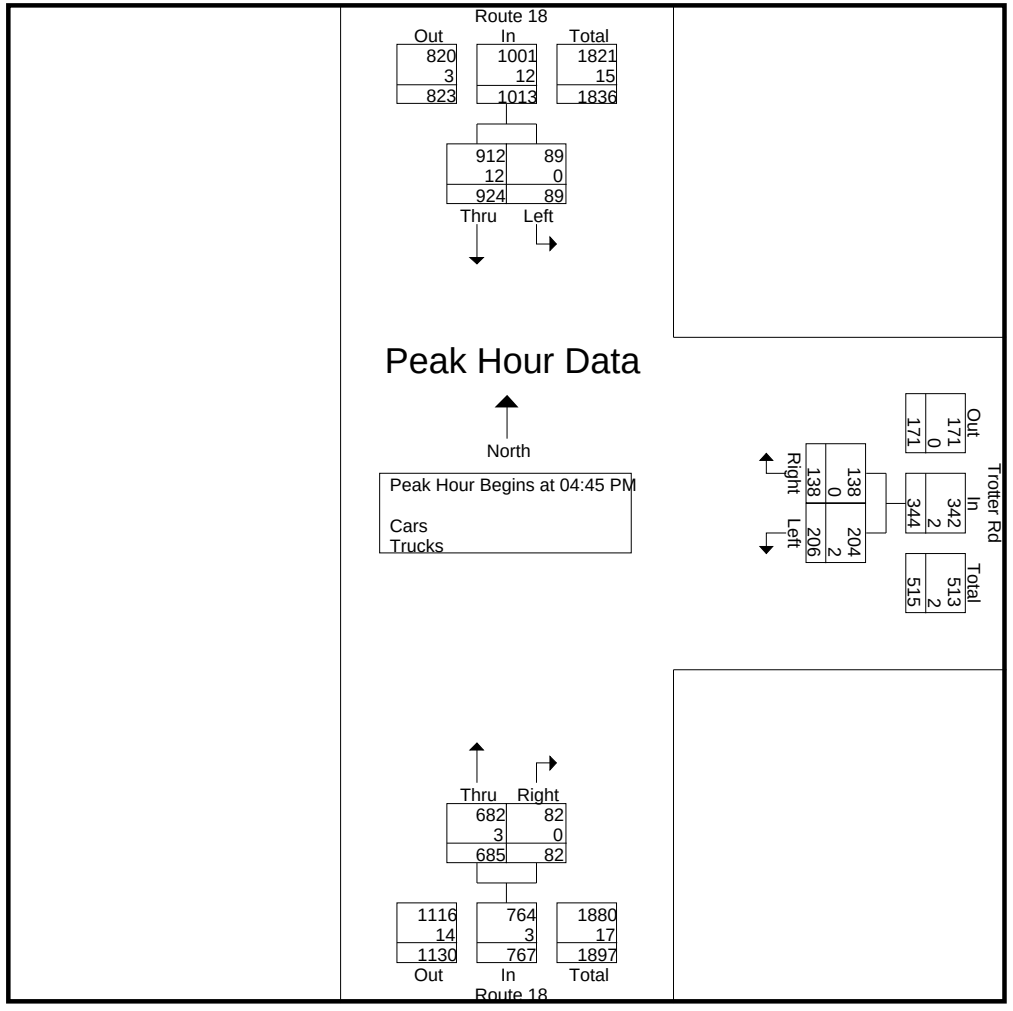

Peak Hour Analysis From 04:00 PM to 05:45 PM - Peak 1 of 1

Peak Hour for Each Approach Begins at:

	04:30 PM			04:45 PM			04:30 PM		
+0 mins.	13	231	244	51	**53**	104	**188**	**28**	**216**
+15 mins.	**25**	235	260	48	22	70	168	17	185
+30 mins.	20	225	245	34	18	52	185	22	207
+45 mins.	20	**250**	**270**	**73**	45	**118**	184	20	204
Total Volume	78	941	1019	206	138	344	725	87	812

Accurate Counts

978-664-2565

% App. Total	7.7	92.3		59.9	40.1		89.3	10.7	
PHF	.780	.941	.944	.705	.651	.729	.964	.777	.940
Cars	77	924	1001	204	138	342	722	86	808
% Cars	98.7	98.2	98.2	99	100	99.4	99.6	98.9	99.5
Trucks	1	17	18	2	0	2	3	1	4
% Trucks	1.3	1.8	1.8	1	0	0.6	0.4	1.1	0.5

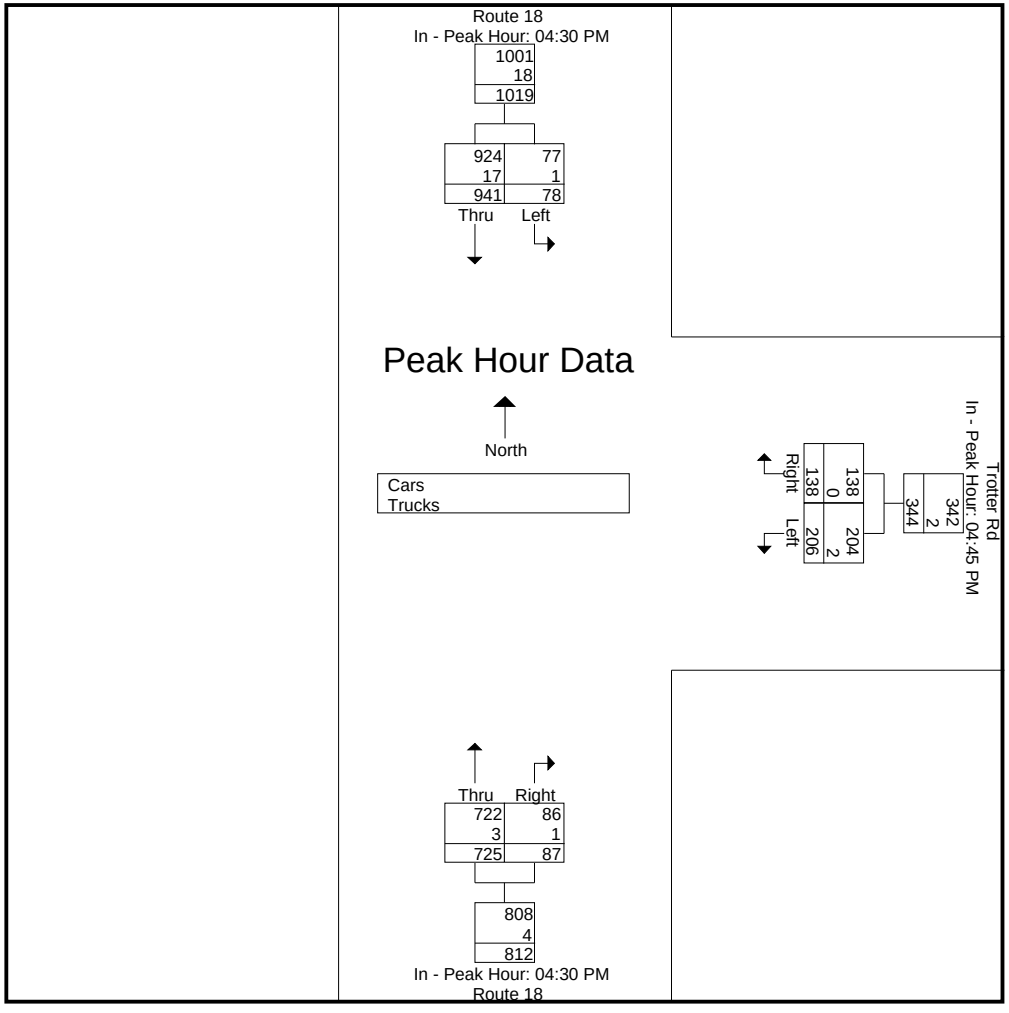

Accurate Counts

978-664-2565

N/S Street : Route 18
E/W Street: Trotter Road
City/State : Weymouth, MA
Weather : Clear

File Name : 84260002
Site Code : 84260002
Start Date : 11/21/2019
Page No : 5

Groups Printed- Cars

	Route 18 From North		Trotter Rd From East		Route 18 From South		
Start Time	Left	Thru	Left	Right	Thru	Right	Int. Total
04:00 PM	19	225	37	16	170	30	497
04:15 PM	17	202	41	19	167	24	470
04:30 PM	12	225	35	19	188	27	506
04:45 PM	25	232	49	53	167	17	543
Total	73	884	162	107	692	98	2016
05:00 PM	20	223	48	22	183	22	518
05:15 PM	20	244	34	18	184	20	520
05:30 PM	24	213	73	45	148	23	526
05:45 PM	19	213	33	20	154	38	477
Total	83	893	188	105	669	103	2041
Grand Total	156	1777	350	212	1361	201	4057
Apprch %	8.1	91.9	62.3	37.7	87.1	12.9	
Total %	3.8	43.8	8.6	5.2	33.5	5	

Accurate Counts

978-664-2565

N/S Street : Route 18
E/W Street: Trotter Road
City/State : Weymouth, MA
Weather : Clear

File Name : 84260002
Site Code : 84260002
Start Date : 11/21/2019
Page No : 6

	Route 18 From North			Trotter Rd From East			Route 18 From South			
Start Time	Left	Thru	App. Total	Left	Right	App. Total	Thru	Right	App. Total	Int. Total
Peak Hour Analysis From 04:00 PM to 05:45 PM - Peak 1 of 1										
Peak Hour for Entire Intersection Begins at 04:45 PM										
04:45 PM	**25**	232	257	49	**53**	102	167	17	184	**543**
05:00 PM	20	223	243	48	22	70	183	22	**205**	518
05:15 PM	20	**244**	**264**	34	18	52	**184**	20	204	520
05:30 PM	24	213	237	**73**	45	**118**	148	**23**	171	526
Total Volume	89	912	1001	204	138	342	682	82	764	2107
% App. Total	8.9	91.1		59.6	40.4		89.3	10.7		
PHF	.890	.934	.948	.699	.651	.725	.927	.891	.932	.970

Accurate Counts

978-664-2565

N/S Street : Route 18
E/W Street: Trotter Road
City/State : Weymouth, MA
Weather : Clear

File Name : 84260002
Site Code : 84260002
Start Date : 11/21/2019
Page No : 7

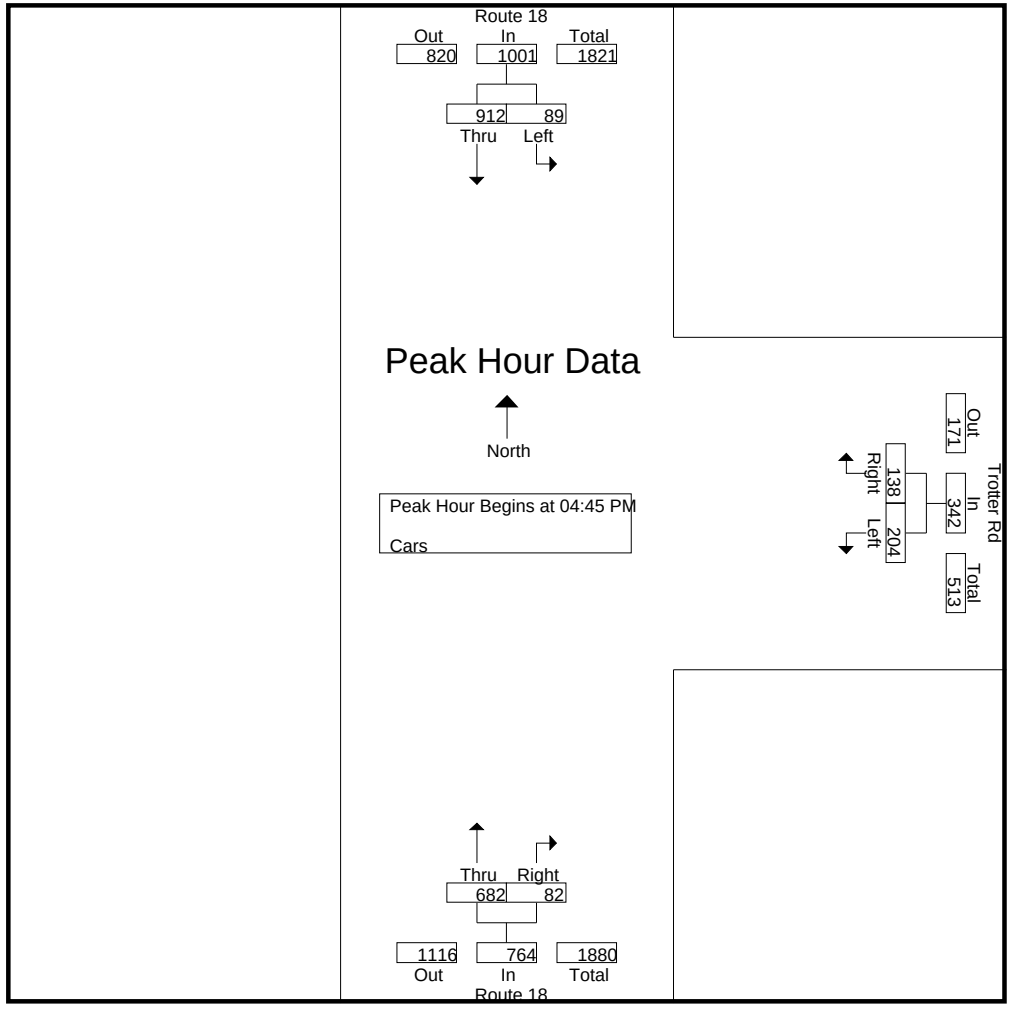

Peak Hour Analysis From 04:00 PM to 05:45 PM - Peak 1 of 1

Peak Hour for Each Approach Begins at:

	04:30 PM			04:45 PM			04:30 PM		
+0 mins.	12	225	237	49	**53**	102	**188**	**27**	**215**
+15 mins.	**25**	232	257	48	22	70	167	17	184
+30 mins.	20	223	243	34	18	52	183	22	205
+45 mins.	20	**244**	**264**	**73**	45	**118**	184	20	204
Total Volume	77	924	1001	204	138	342	722	86	808

Accurate Counts

978-664-2565

% App. Total	7.7	92.3		59.6	40.4		89.4	10.6	
PHF	.770	.947	.948	.699	.651	.725	.960	.796	.940

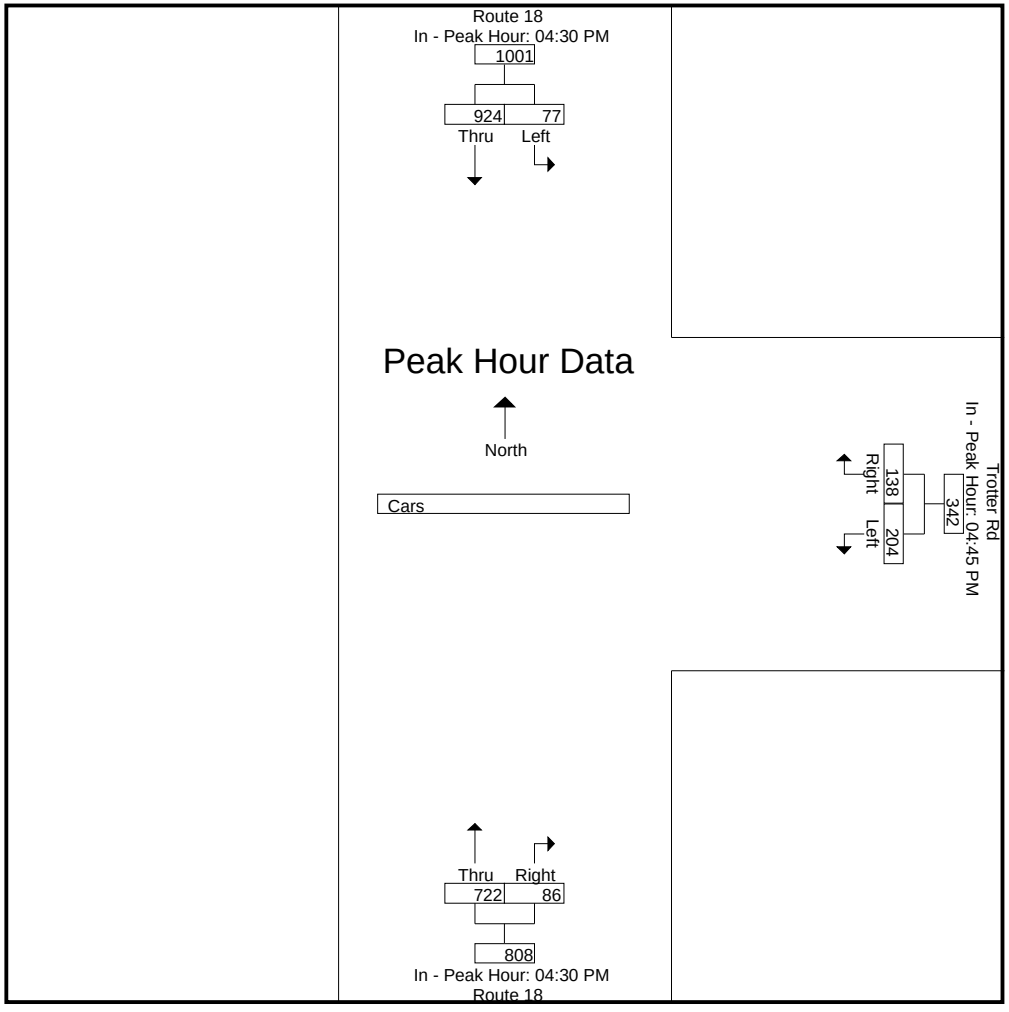

Accurate Counts

978-664-2565

N/S Street : Route 18
E/W Street: Trotter Road
City/State : Weymouth, MA
Weather : Clear

File Name : 84260002
Site Code : 84260002
Start Date : 11/21/2019
Page No : 9

Groups Printed- Trucks

	Route 18 From North		Trotter Rd From East		Route 18 From South		
Start Time	Left	Thru	Left	Right	Thru	Right	Int. Total
04:00 PM	2	9	0	0	1	0	12
04:15 PM	0	3	0	0	2	0	5
04:30 PM	1	6	0	0	0	1	8
04:45 PM	0	3	2	0	1	0	6
Total	3	21	2	0	4	1	31
05:00 PM	0	2	0	0	2	0	4
05:15 PM	0	6	0	0	0	0	6
05:30 PM	0	1	0	0	0	0	1
05:45 PM	0	2	0	0	2	0	4
Total	0	11	0	0	4	0	15
Grand Total	3	32	2	0	8	1	46
Apprch %	8.6	91.4	100	0	88.9	11.1	
Total %	6.5	69.6	4.3	0	17.4	2.2	

Accurate Counts

978-664-2565

N/S Street : Route 18
E/W Street: Trotter Road
City/State : Weymouth, MA
Weather : Clear

File Name : 84260002
Site Code : 84260002
Start Date : 11/21/2019
Page No : 10

	Route 18 From North			Trotter Rd From East			Route 18 From South			
Start Time	Left	Thru	App. Total	Left	Right	App. Total	Thru	Right	App. Total	Int. Total
Peak Hour Analysis From 04:00 PM to 05:45 PM - Peak 1 of 1										
Peak Hour for Entire Intersection Begins at 04:00 PM										
04:00 PM	**2**	**9**	**11**	0	0	0	1	0	1	**12**
04:15 PM	0	3	3	0	0	0	**2**	0	**2**	5
04:30 PM	1	6	7	0	0	0	0	**1**	1	8
04:45 PM	0	3	3	**2**	0	**2**	1	0	1	6
Total Volume	3	21	24	2	0	2	4	1	5	31
% App. Total	12.5	87.5		100	0		80	20		
PHF	.375	.583	.545	.250	.000	.250	.500	.250	.625	.646

Accurate Counts

978-664-2565

N/S Street : Route 18
E/W Street: Trotter Road
City/State : Weymouth, MA
Weather : Clear

File Name : 84260002
Site Code : 84260002
Start Date : 11/21/2019
Page No : 11

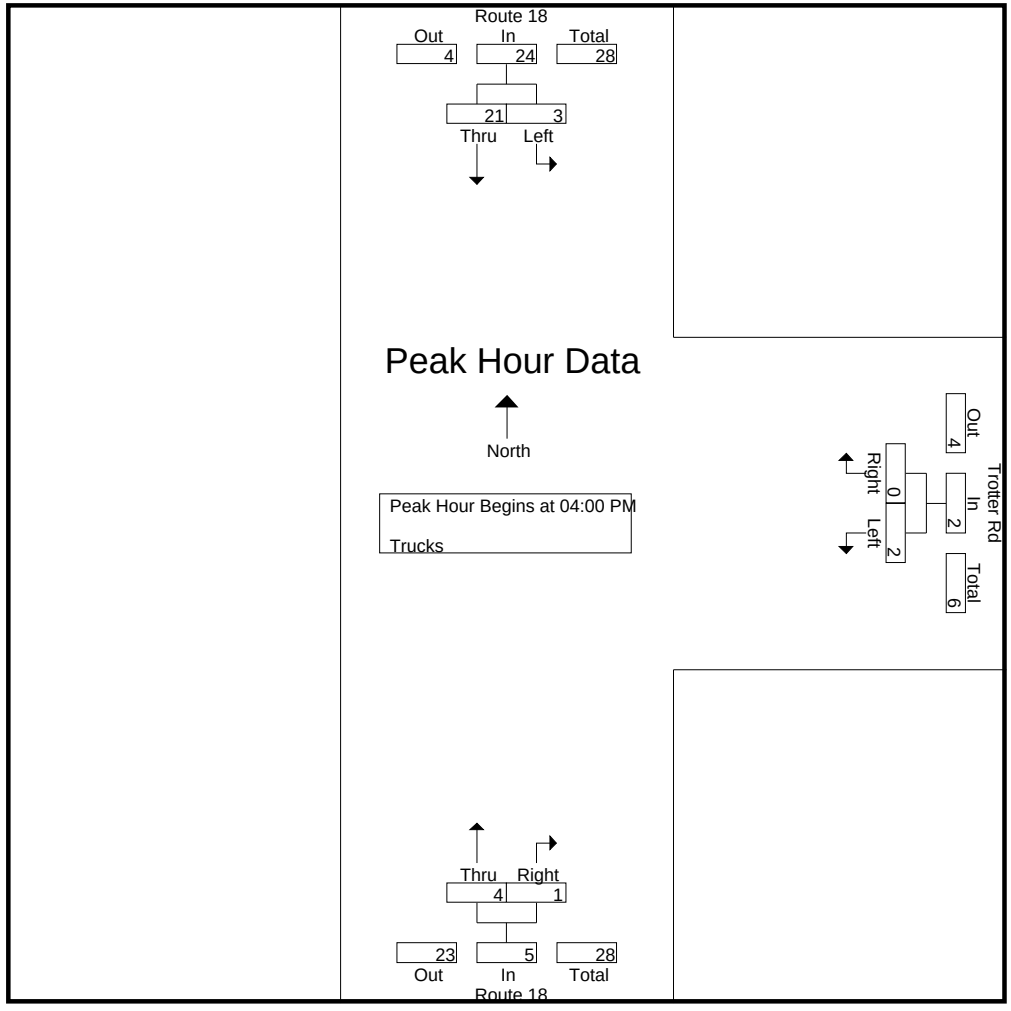

Peak Hour Analysis From 04:00 PM to 05:45 PM - Peak 1 of 1

Peak Hour for Each Approach Begins at:

	04:00 PM			04:00 PM			04:15 PM		
+0 mins.	**2**	**9**	**11**	0	0	0	**2**	0	**2**
+15 mins.	0	3	3	0	0	0	0	**1**	1
+30 mins.	1	6	7	0	0	0	1	0	1
+45 mins.	0	3	3	**2**	0	**2**	2	0	2
Total Volume	3	21	24	2	0	2	5	1	6

Accurate Counts

978-664-2565

% App. Total	12.5	87.5		100	0		83.3	16.7	
PHF	.375	.583	.545	.250	.000	.250	.625	.250	.750

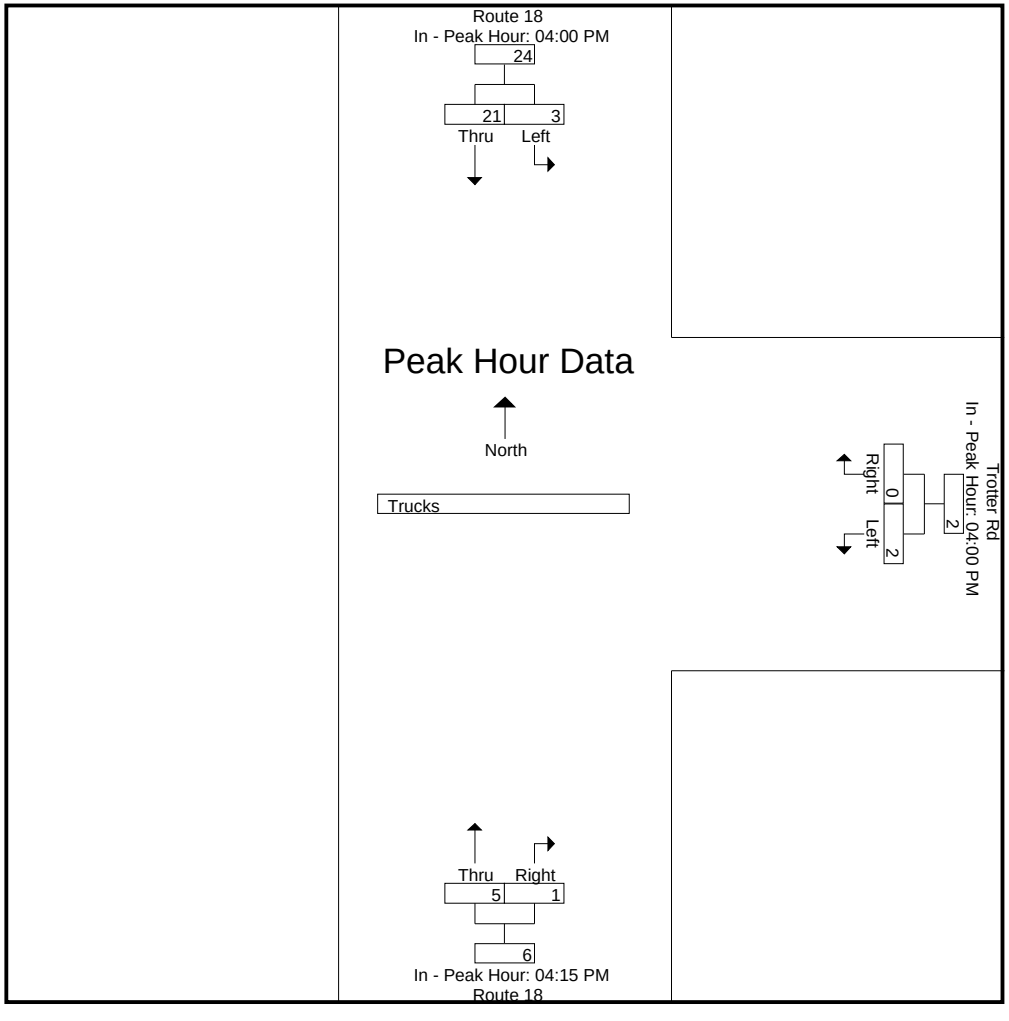

Accurate Counts

978-664-2565

N/S Street : Route 18
E/W Street: Trotter Road
City/State : Weymouth, MA
Weather : Clear

File Name : 84260002
Site Code : 84260002
Start Date : 11/21/2019
Page No : 13

Groups Printed- Bikes Peds

	Route 18 From North			Trotter Rd From East			Route 18 From South					
Start Time	Left	Thru	Peds	Left	Right	Peds	Thru	Right	Peds	Exclu. Total	Inclu. Total	Int. Total
04:00 PM	0	0	2	0	0	0	0	0	0	2	0	2
04:15 PM	0	0	0	1	0	0	0	0	0	0	1	1
04:30 PM	0	0	0	0	0	0	0	0	0	0	0	0
04:45 PM	0	0	3	0	0	0	0	0	0	3	0	3
Total	0	0	5	1	0	0	0	0	0	5	1	6
05:00 PM	0	0	0	0	0	0	0	0	0	0	0	0
05:15 PM	0	0	0	0	0	0	0	0	0	0	0	0
05:30 PM	0	0	2	0	0	0	0	0	0	2	0	2
05:45 PM	0	0	0	0	0	0	0	0	0	0	0	0
Total	0	0	2	0	0	0	0	0	0	2	0	2
Grand Total	0	0	7	1	0	0	0	0	0	7	1	8
Apprch %	0	0		100	0		0	0				
Total %	0	0		100	0		0	0		87.5	12.5	

Accurate Counts

978-664-2565

N/S Street : Route 18
E/W Street: Trotter Road
City/State : Weymouth, MA
Weather : Clear

File Name : 84260002
Site Code : 84260002
Start Date : 11/21/2019
Page No : 14

	Route 18 From North			Trotter Rd From East			Route 18 From South			
Start Time	Left	Thru	App. Total	Left	Right	App. Total	Thru	Right	App. Total	Int. Total
Peak Hour Analysis From 04:00 PM to 05:45 PM - Peak 1 of 1										
Peak Hour for Entire Intersection Begins at 04:00 PM										
04:00 PM	0	0	0	0	0	0	0	0	0	0
04:15 PM	0	0	0	**1**	0	**1**	0	0	0	**1**
04:30 PM	0	0	0	0	0	0	0	0	0	0
04:45 PM	0	0	0	0	0	0	0	0	0	0
Total Volume	0	0	0	1	0	1	0	0	0	1
% App. Total	0	0		100	0		0	0		
PHF	.000	.000	.000	.250	.000	.250	.000	.000	.000	.250

Accurate Counts

978-664-2565

N/S Street : Route 18
E/W Street: Trotter Road
City/State : Weymouth, MA
Weather : Clear

File Name : 84260002
Site Code : 84260002
Start Date : 11/21/2019
Page No : 15

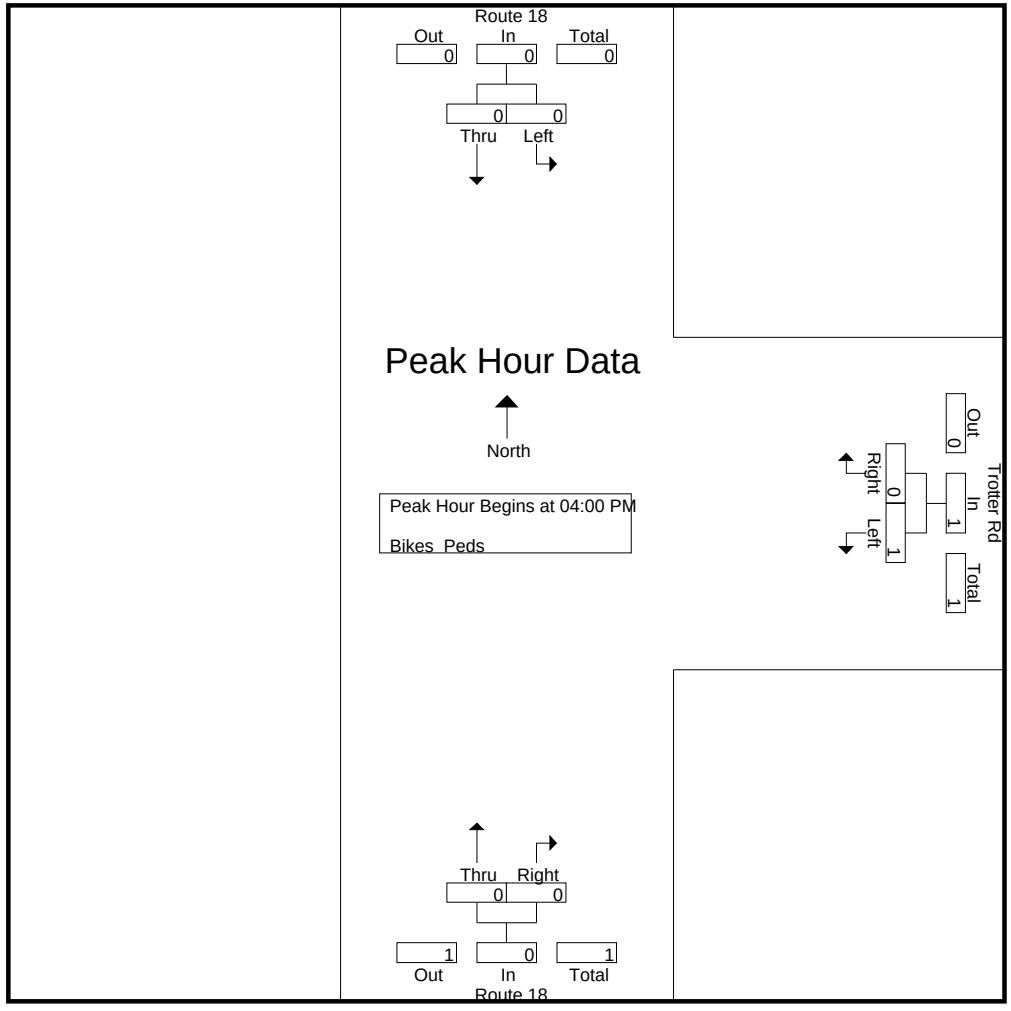

Peak Hour Analysis From 04:00 PM to 05:45 PM - Peak 1 of 1

Peak Hour for Each Approach Begins at:

	04:00 PM			04:00 PM			04:00 PM		
+0 mins.	0	0	0	0	0	0	0	0	0
+15 mins.	0	0	0	**1**	0	**1**	0	0	0
+30 mins.	0	0	0	0	0	0	0	0	0
+45 mins.	0	0	0	0	0	0	0	0	0
Total Volume	0	0	0	1	0	1	0	0	0

Accurate Counts

978-664-2565

% App. Total	0	0		100	0		0	0	
PHF	.000	.000	.000	.250	.000	.250	.000	.000	.000

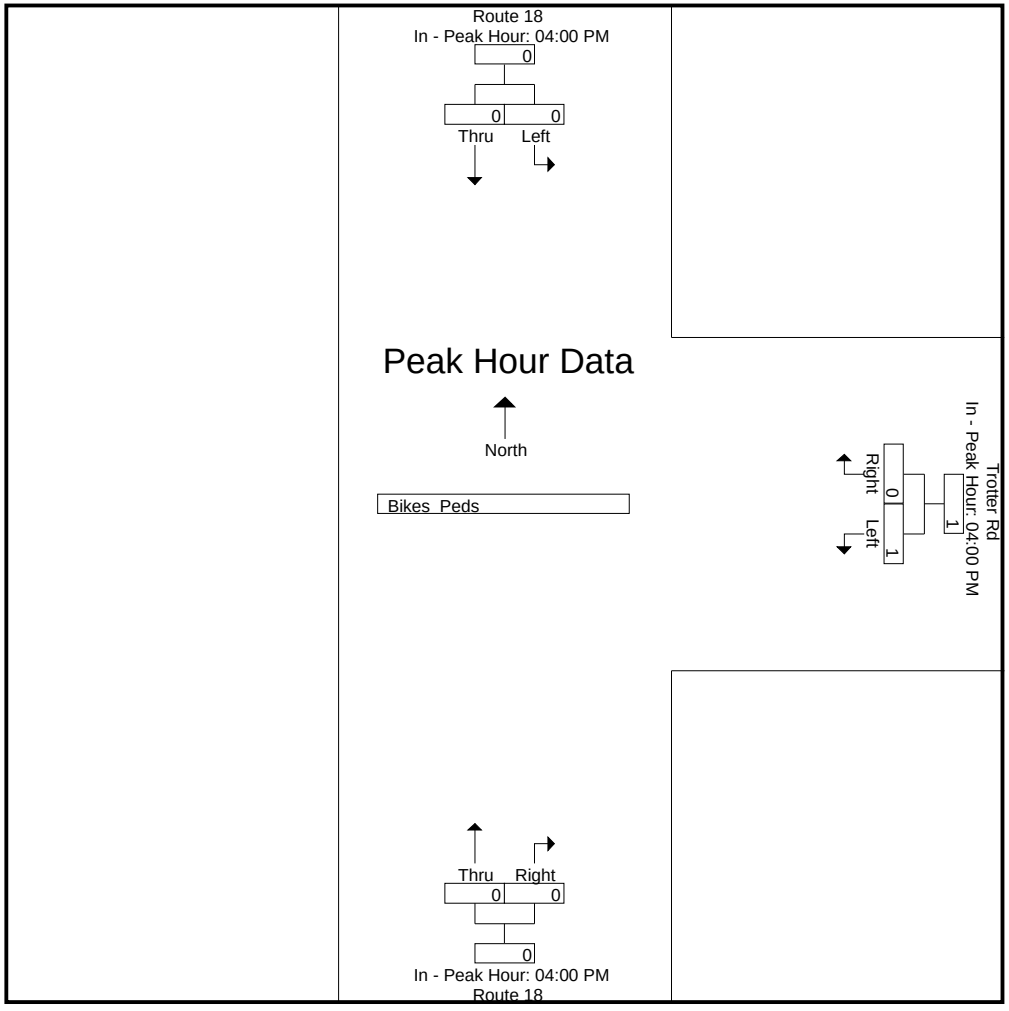

Accurate Counts

978-664-2565

N/S Street : Route 18
E/W Street: Trotter Road
City/State : Weymouth, MA
Weather : Clear

File Name : 842600S2
Site Code : 84260002
Start Date : 11/23/2019
Page No : 1

Groups Printed- Cars - Trucks

	Route 18 From North		Trotter Rd From East		Route 18 From South		
Start Time	Left	Thru	Left	Right	Thru	Right	Int. Total
11:00 AM	19	186	33	20	214	25	497
11:15 AM	23	213	21	29	219	28	533
11:30 AM	13	206	37	30	186	25	497
11:45 AM	20	202	41	29	229	26	547
Total	75	807	132	108	848	104	2074
12:00 PM	21	209	37	22	195	23	507
12:15 PM	15	196	20	20	227	25	503
12:30 PM	23	210	34	23	213	13	516
12:45 PM	15	234	33	23	201	20	526
Total	74	849	124	88	836	81	2052
01:00 PM	20	231	37	23	221	18	550
01:15 PM	20	192	34	25	213	21	505
01:30 PM	15	193	34	17	178	27	464
01:45 PM	23	202	33	25	188	18	489
Total	78	818	138	90	800	84	2008
Grand Total	227	2474	394	286	2484	269	6134
Apprch %	8.4	91.6	57.9	42.1	90.2	9.8	
Total %	3.7	40.3	6.4	4.7	40.5	4.4	
Cars	227	2449	392	286	2465	269	6088
% Cars	100	99	99.5	100	99.2	100	99.3
Trucks	0	25	2	0	19	0	46
% Trucks	0	1	0.5	0	0.8	0	0.7

Accurate Counts

978-664-2565

N/S Street : Route 18
E/W Street: Trotter Road
City/State : Weymouth, MA
Weather : Clear

File Name : 842600S2
Site Code : 84260002
Start Date : 11/23/2019
Page No : 2

	Route 18 From North			Trotter Rd From East			Route 18 From South			
Start Time	Left	Thru	App. Total	Left	Right	App. Total	Thru	Right	App. Total	Int. Total
Peak Hour Analysis From 11:00 AM to 01:45 PM - Peak 1 of 1										
Peak Hour for Entire Intersection Begins at 12:30 PM										
12:30 PM	**23**	210	233	34	23	57	213	13	226	516
12:45 PM	15	**234**	249	33	23	56	201	20	221	526
01:00 PM	20	231	**251**	**37**	23	**60**	**221**	18	**239**	**550**
01:15 PM	20	192	212	34	**25**	59	213	**21**	234	505
Total Volume	78	867	945	138	94	232	848	72	920	2097
% App. Total	8.3	91.7		59.5	40.5		92.2	7.8		
PHF	.848	.926	.941	.932	.940	.967	.959	.857	.962	.953
Cars	78	862	940	136	94	230	843	72	915	2085
% Cars	100	99.4	99.5	98.6	100	99.1	99.4	100	99.5	99.4
Trucks	0	5	5	2	0	2	5	0	5	12
% Trucks	0	0.6	0.5	1.4	0	0.9	0.6	0	0.5	0.6

Accurate Counts

978-664-2565

N/S Street : Route 18
E/W Street: Trotter Road
City/State : Weymouth, MA
Weather : Clear

File Name : 842600S2
Site Code : 84260002
Start Date : 11/23/2019
Page No : 3

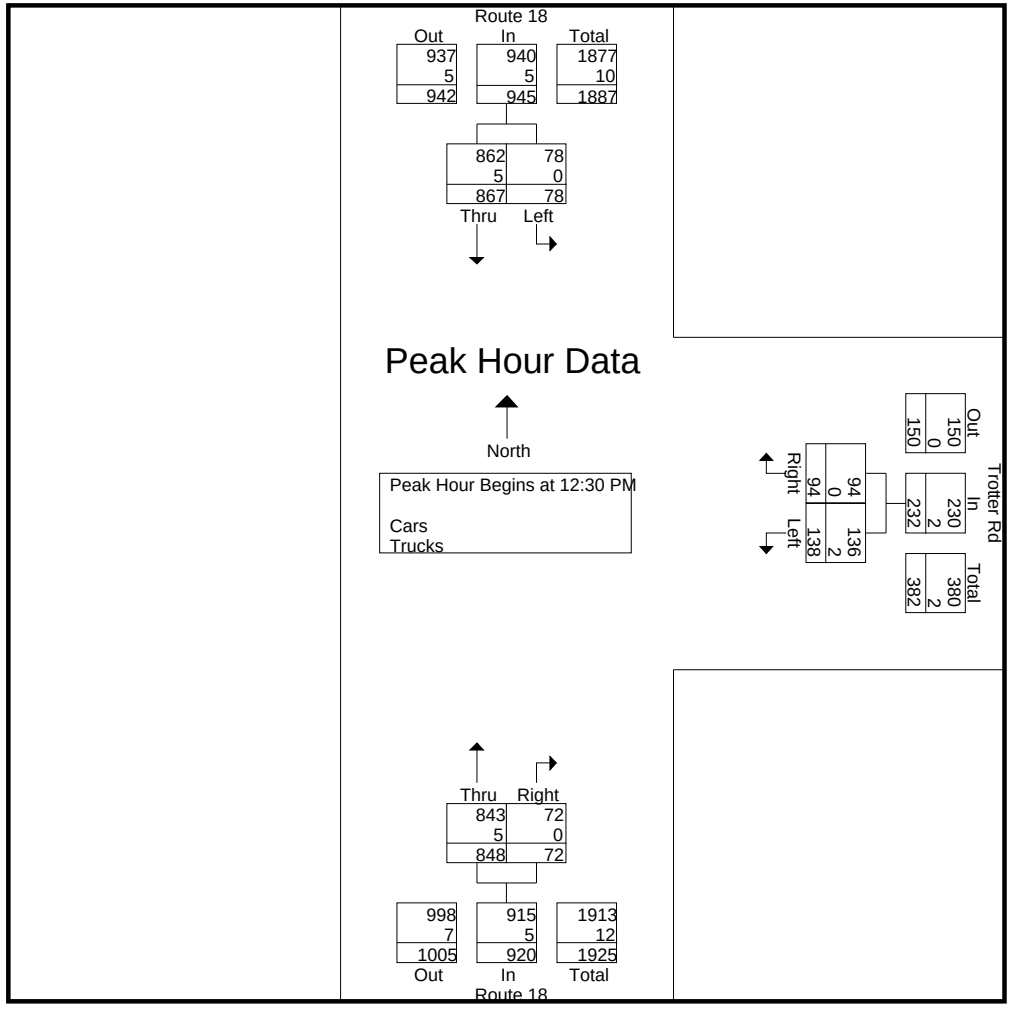

Peak Hour Analysis From 11:00 AM to 01:45 PM - Peak 1 of 1

Peak Hour for Each Approach Begins at:

	12:30 PM			11:15 AM			11:00 AM		
+0 mins.	**23**	210	233	21	29	50	214	25	239
+15 mins.	15	**234**	249	37	**30**	67	219	**28**	247
+30 mins.	20	231	**251**	**41**	29	**70**	186	25	211
+45 mins.	20	192	212	37	22	59	**229**	26	**255**
Total Volume	78	867	945	136	110	246	848	104	952
% App. Total	8.3	91.7		55.3	44.7		89.1	10.9	
PHF	.848	.926	.941	.829	.917	.879	.926	.929	.933

Accurate Counts

978-664-2565

Cars	78	862	940	136	110	246	836	104	940
% Cars	100	99.4	99.5	100	100	100	98.6	100	98.7
Trucks	0	5	5	0	0	0	12	0	12
% Trucks	0	0.6	0.5	0	0	0	1.4	0	1.3

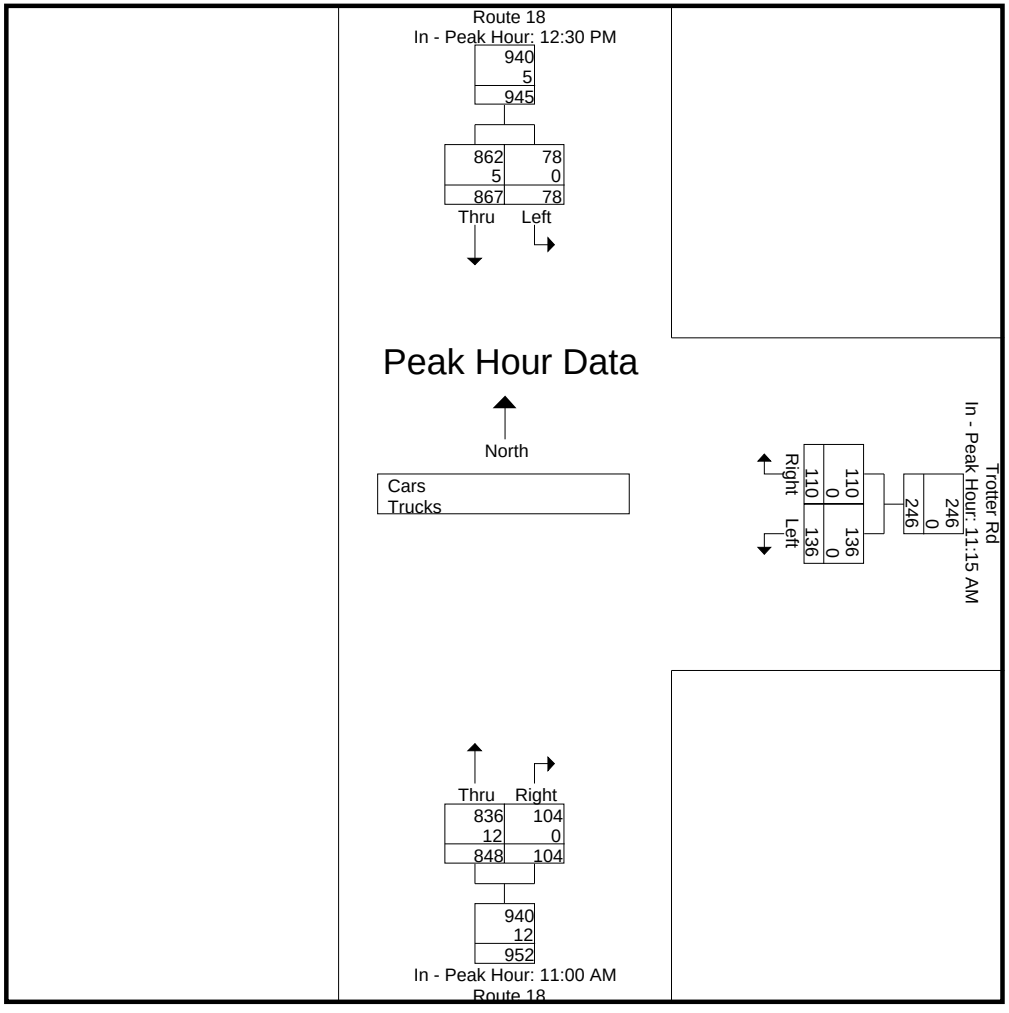

Accurate Counts

978-664-2565

N/S Street : Route 18
E/W Street: Trotter Road
City/State : Weymouth, MA
Weather : Clear

File Name : 842600S2
Site Code : 84260002
Start Date : 11/23/2019
Page No : 5

Groups Printed- Cars

	Route 18 From North		Trotter Rd From East		Route 18 From South		
Start Time	Left	Thru	Left	Right	Thru	Right	Int. Total
11:00 AM	19	185	33	20	214	25	496
11:15 AM	23	210	21	29	213	28	524
11:30 AM	13	204	37	30	182	25	491
11:45 AM	20	200	41	29	227	26	543
Total	75	799	132	108	836	104	2054
12:00 PM	21	204	37	22	195	23	502
12:15 PM	15	192	20	20	227	25	499
12:30 PM	23	208	34	23	212	13	513
12:45 PM	15	234	33	23	200	20	525
Total	74	838	124	88	834	81	2039
01:00 PM	20	230	37	23	219	18	547
01:15 PM	20	190	32	25	212	21	500
01:30 PM	15	190	34	17	177	27	460
01:45 PM	23	202	33	25	187	18	488
Total	78	812	136	90	795	84	1995
Grand Total	227	2449	392	286	2465	269	6088
Apprch %	8.5	91.5	57.8	42.2	90.2	9.8	
Total %	3.7	40.2	6.4	4.7	40.5	4.4	

Accurate Counts

978-664-2565

N/S Street : Route 18
E/W Street: Trotter Road
City/State : Weymouth, MA
Weather : Clear

File Name : 842600S2
Site Code : 84260002
Start Date : 11/23/2019
Page No : 6

	Route 18 From North			Trotter Rd From East			Route 18 From South			
Start Time	Left	Thru	App. Total	Left	Right	App. Total	Thru	Right	App. Total	Int. Total
Peak Hour Analysis From 11:00 AM to 01:45 PM - Peak 1 of 1										
Peak Hour for Entire Intersection Begins at 12:30 PM										
12:30 PM	**23**	208	231	34	23	57	212	13	225	513
12:45 PM	15	**234**	249	33	23	56	200	20	220	525
01:00 PM	20	230	**250**	**37**	23	**60**	**219**	18	**237**	**547**
01:15 PM	20	190	210	32	**25**	57	212	**21**	233	500
Total Volume	78	862	940	136	94	230	843	72	915	2085
% App. Total	8.3	91.7		59.1	40.9		92.1	7.9		
PHF	.848	.921	.940	.919	.940	.958	.962	.857	.965	.953

Accurate Counts

978-664-2565

N/S Street : Route 18
E/W Street: Trotter Road
City/State : Weymouth, MA
Weather : Clear

File Name : 842600S2
Site Code : 84260002
Start Date : 11/23/2019
Page No : 7

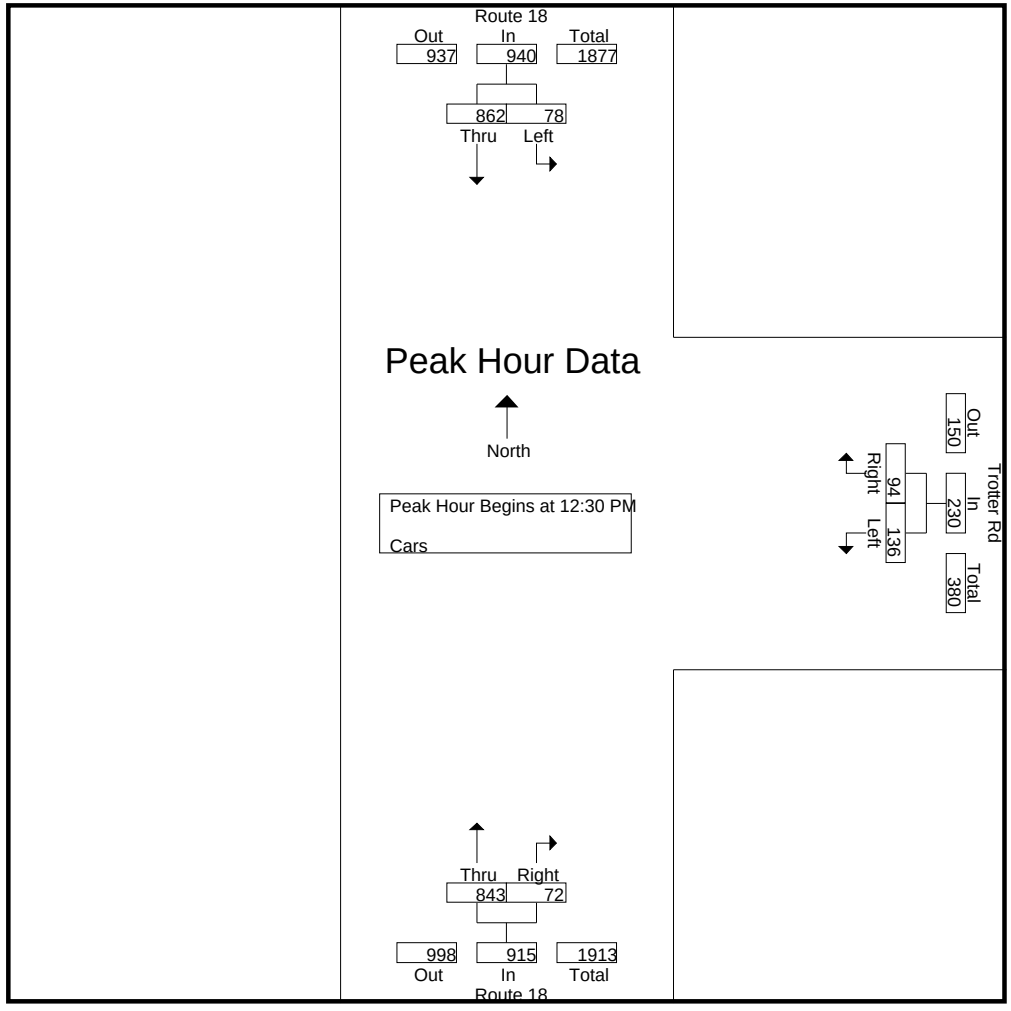

Peak Hour Analysis From 11:00 AM to 01:45 PM - Peak 1 of 1

Peak Hour for Each Approach Begins at:

	12:30 PM			11:15 AM			11:45 AM		
+0 mins.	**23**	208	231	21	29	50	**227**	**26**	**253**
+15 mins.	15	**234**	249	37	**30**	67	195	23	218
+30 mins.	20	230	**250**	**41**	29	**70**	227	25	252
+45 mins.	20	190	210	37	22	59	212	13	225
Total Volume	78	862	940	136	110	246	861	87	948
% App. Total	8.3	91.7		55.3	44.7		90.8	9.2	
PHF	.848	.921	.940	.829	.917	.879	.948	.837	.937

Accurate Counts

978-664-2565

N/S Street : Route 18
E/W Street: Trotter Road
City/State : Weymouth, MA
Weather : Clear

File Name : 842600S2
Site Code : 84260002
Start Date : 11/23/2019
Page No : 8

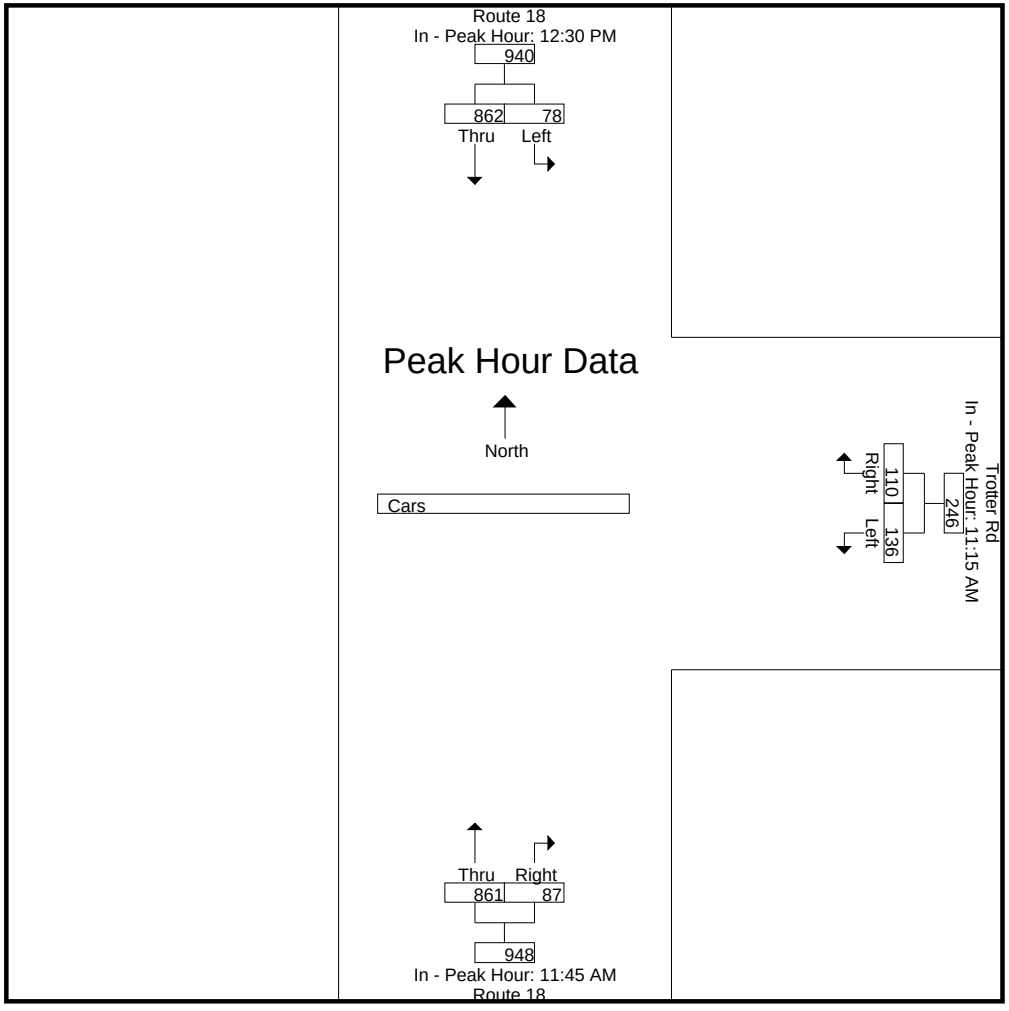

Accurate Counts

978-664-2565

N/S Street : Route 18
E/W Street: Trotter Road
City/State : Weymouth, MA
Weather : Clear

File Name : 842600S2
Site Code : 84260002
Start Date : 11/23/2019
Page No : 9

Groups Printed- Trucks

	Route 18 From North		Trotter Rd From East		Route 18 From South		
Start Time	Left	Thru	Left	Right	Thru	Right	Int. Total
11:00 AM	0	1	0	0	0	0	1
11:15 AM	0	3	0	0	6	0	9
11:30 AM	0	2	0	0	4	0	6
11:45 AM	0	2	0	0	2	0	4
Total	0	8	0	0	12	0	20
12:00 PM	0	5	0	0	0	0	5
12:15 PM	0	4	0	0	0	0	4
12:30 PM	0	2	0	0	1	0	3
12:45 PM	0	0	0	0	1	0	1
Total	0	11	0	0	2	0	13
01:00 PM	0	1	0	0	2	0	3
01:15 PM	0	2	2	0	1	0	5
01:30 PM	0	3	0	0	1	0	4
01:45 PM	0	0	0	0	1	0	1
Total	0	6	2	0	5	0	13
Grand Total	0	25	2	0	19	0	46
Apprch %	0	100	100	0	100	0	
Total %	0	54.3	4.3	0	41.3	0	

Accurate Counts

978-664-2565

N/S Street : Route 18
E/W Street: Trotter Road
City/State : Weymouth, MA
Weather : Clear

File Name : 842600S2
Site Code : 84260002
Start Date : 11/23/2019
Page No : 10

	Route 18 From North			Trotter Rd From East			Route 18 From South			
Start Time	Left	Thru	App. Total	Left	Right	App. Total	Thru	Right	App. Total	Int. Total
Peak Hour Analysis From 11:00 AM to 01:45 PM - Peak 1 of 1										
Peak Hour for Entire Intersection Begins at 11:15 AM										
11:15 AM	0	3	3	0	0	0	**6**	0	**6**	**9**
11:30 AM	0	2	2	0	0	0	4	0	4	6
11:45 AM	0	2	2	0	0	0	2	0	2	4
12:00 PM	0	**5**	**5**	0	0	0	0	0	0	5
Total Volume	0	12	12	0	0	0	12	0	12	24
% App. Total	0	100		0	0		100	0		
PHF	.000	.600	.600	.000	.000	.000	.500	.000	.500	.667

Accurate Counts

978-664-2565

N/S Street : Route 18
E/W Street: Trotter Road
City/State : Weymouth, MA
Weather : Clear

File Name : 842600S2
Site Code : 84260002
Start Date : 11/23/2019
Page No : 11

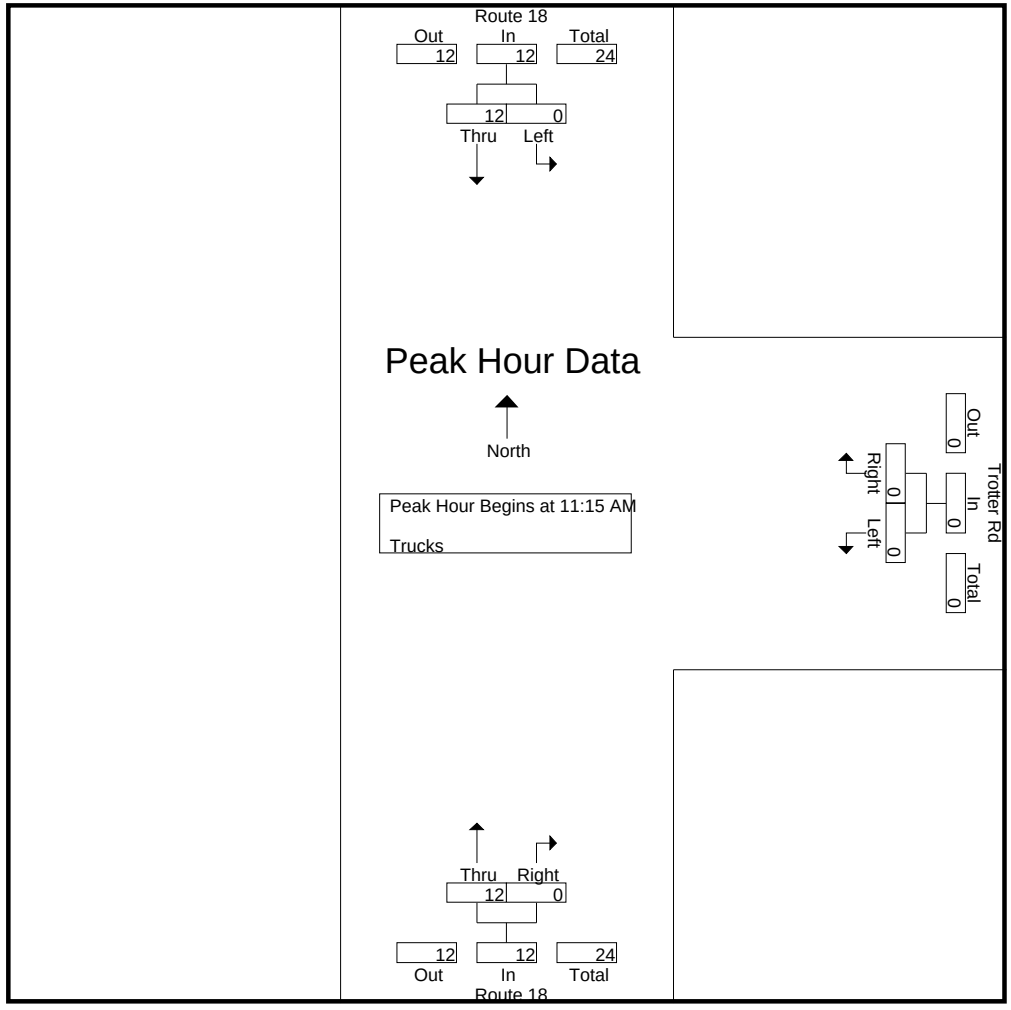

Peak Hour Analysis From 11:00 AM to 01:45 PM - Peak 1 of 1

Peak Hour for Each Approach Begins at:

	11:30 AM			12:30 PM			11:00 AM		
+0 mins.	0	2	2	0	0	0	0	0	0
+15 mins.	0	2	2	0	0	0	**6**	0	**6**
+30 mins.	0	**5**	**5**	0	0	0	4	0	4
+45 mins.	0	4	4	**2**	0	**2**	2	0	2
Total Volume	0	13	13	2	0	2	12	0	12
% App. Total	0	100		100	0		100	0	
PHF	.000	.650	.650	.250	.000	.250	.500	.000	.500

Accurate Counts

978-664-2565

N/S Street : Route 18
E/W Street: Trotter Road
City/State : Weymouth, MA
Weather : Clear

File Name : 842600S2
Site Code : 84260002
Start Date : 11/23/2019
Page No : 12

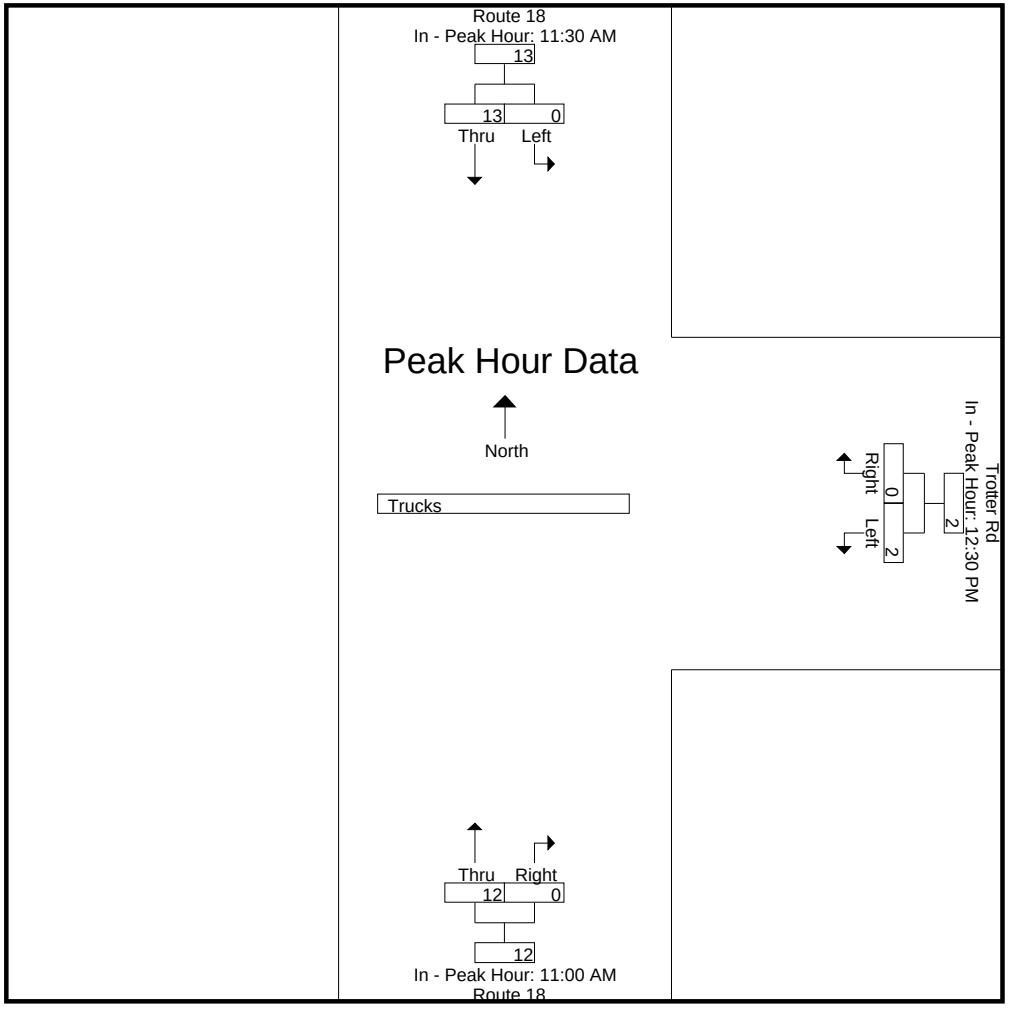

Accurate Counts

978-664-2565

N/S Street : Route 18
E/W Street: Trotter Road
City/State : Weymouth, MA
Weather : Clear

File Name : 842600S2
Site Code : 84260002
Start Date : 11/23/2019
Page No : 13

Groups Printed- Bikes Peds

	Route 18 From North			Trotter Rd From East			Route 18 From South					
Start Time	Left	Thru	Peds	Left	Right	Peds	Thru	Right	Peds	Exclu. Total	Inclu. Total	Int. Total
11:00 AM	0	0	0	0	0	0	0	0	0	0	0	0
11:15 AM	0	0	0	0	0	0	0	0	0	0	0	0
11:30 AM	0	0	0	0	0	0	0	0	0	0	0	0
11:45 AM	0	0	1	0	0	0	0	0	0	1	0	1
Total	0	0	1	0	0	0	0	0	0	1	0	1
12:00 PM	0	0	0	0	0	0	0	0	0	0	0	0
12:15 PM	0	0	0	0	0	0	0	0	0	0	0	0
12:30 PM	0	0	0	0	0	0	0	0	0	0	0	0
12:45 PM	0	0	0	0	0	0	0	0	0	0	0	0
Total	0	0	0	0	0	0	0	0	0	0	0	0
01:00 PM	0	0	0	0	0	0	0	0	0	0	0	0
01:15 PM	0	0	0	0	0	0	0	0	0	0	0	0
01:30 PM	0	0	1	0	1	0	0	0	0	1	1	2
01:45 PM	0	0	0	0	0	0	0	0	0	0	0	0
Total	0	0	1	0	1	0	0	0	0	1	1	2
Grand Total	0	0	2	0	1	0	0	0	0	2	1	3
Apprch %	0	0		0	100		0	0				
Total %	0	0		0	100		0	0		66.7	33.3	

Accurate Counts

978-664-2565

N/S Street : Route 18
E/W Street: Trotter Road
City/State : Weymouth, MA
Weather : Clear

File Name : 842600S2
Site Code : 84260002
Start Date : 11/23/2019
Page No : 14

	Route 18 From North			Trotter Rd From East			Route 18 From South			
Start Time	Left	Thru	App. Total	Left	Right	App. Total	Thru	Right	App. Total	Int. Total
Peak Hour Analysis From 11:00 AM to 01:45 PM - Peak 1 of 1										
Peak Hour for Entire Intersection Begins at 12:45 PM										
12:45 PM	0	0	0	0	0	0	0	0	0	0
01:00 PM	0	0	0	0	0	0	0	0	0	0
01:15 PM	0	0	0	0	0	0	0	0	0	0
01:30 PM	0	0	0	0	**1**	**1**	0	0	0	**1**
Total Volume	0	0	0	0	1	1	0	0	0	1
% App. Total	0	0		0	100		0	0		
PHF	.000	.000	.000	.000	.250	.250	.000	.000	.000	.250

Accurate Counts

978-664-2565

N/S Street : Route 18
E/W Street: Trotter Road
City/State : Weymouth, MA
Weather : Clear

File Name : 842600S2
Site Code : 84260002
Start Date : 11/23/2019
Page No : 15

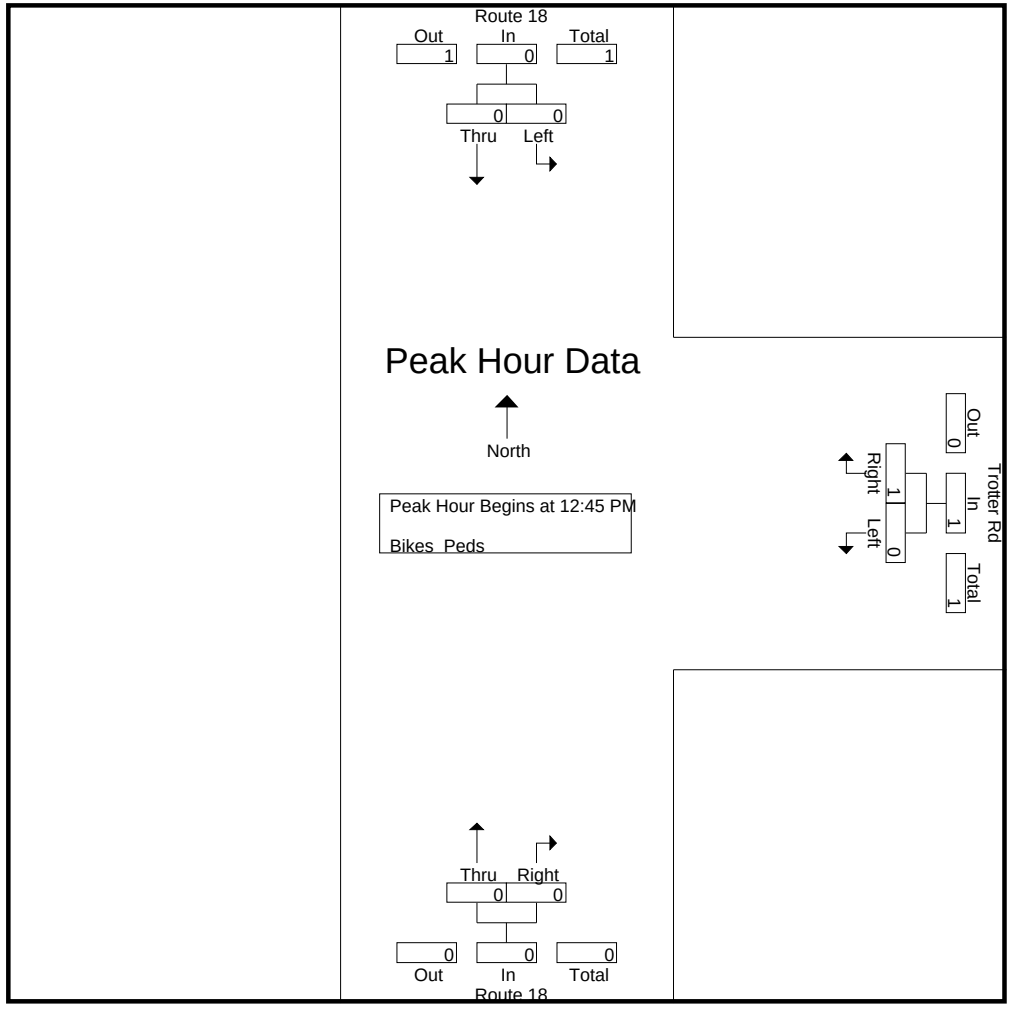

Peak Hour Analysis From 11:00 AM to 01:45 PM - Peak 1 of 1

Peak Hour for Each Approach Begins at:

	11:00 AM			12:45 PM			11:00 AM		
+0 mins.	0	0	0	0	0	0	0	0	0
+15 mins.	0	0	0	0	0	0	0	0	0
+30 mins.	0	0	0	0	0	0	0	0	0
+45 mins.	0	0	0	0	**1**	**1**	0	0	0
Total Volume	0	0	0	0	1	1	0	0	0
% App. Total	0	0		0	100		0	0	
PHF	.000	.000	.000	.000	.250	.250	.000	.000	.000

Accurate Counts

978-664-2565

N/S Street : Route 18
E/W Street: Trotter Road
City/State : Weymouth, MA
Weather : Clear

File Name : 842600S2
Site Code : 84260002
Start Date : 11/23/2019
Page No : 16

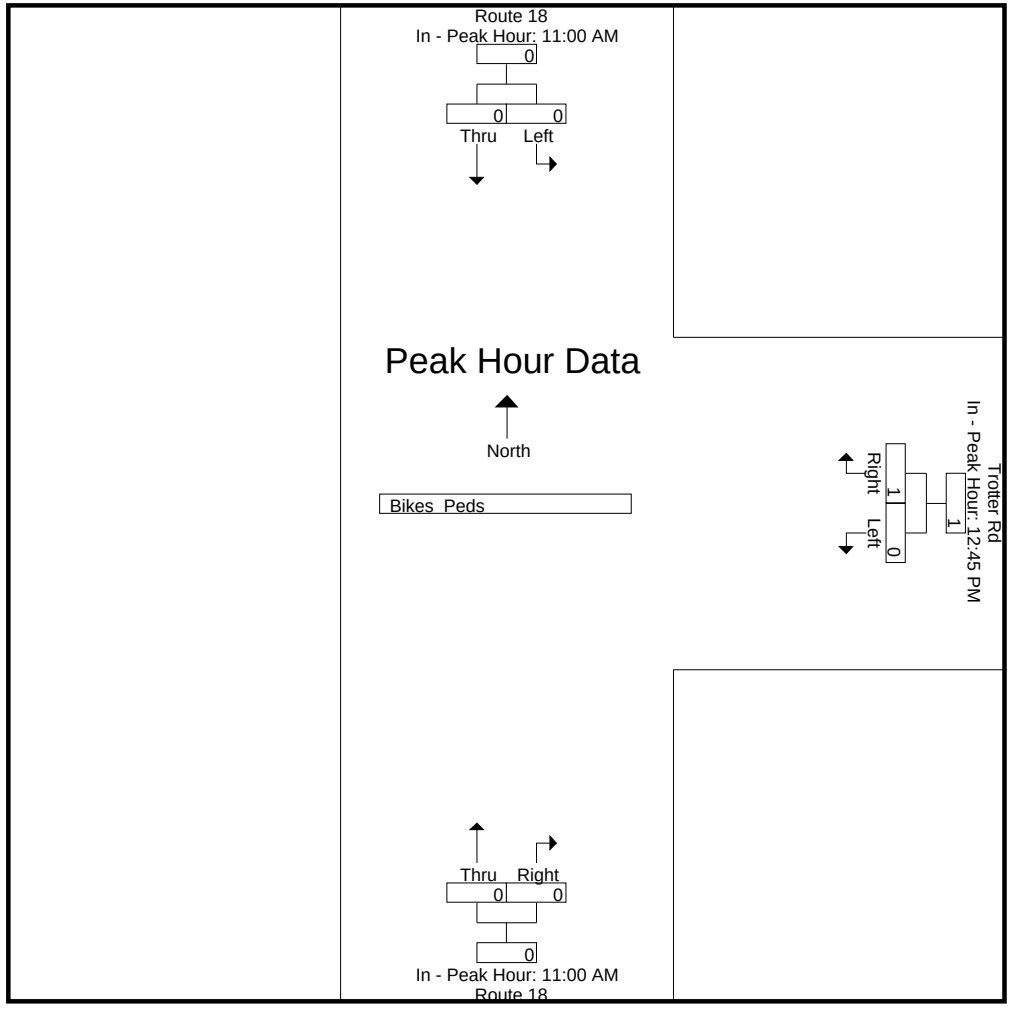

Accurate Counts

978-664-2565

N/S Street : Route 18
E/W Street : Jessica Lane
City/State : Weymouth, MA
Weather : Clear

File Name : 84280001
Site Code : 84280001
Start Date : 5/5/2022
Page No : 1

Groups Printed- Cars - Trucks

	Route 18 From North		Route 18 From South		Jessica Lane From West		
Start Time	Thru	Right	Left	Thru	Left	Right	Int. Total
07:00 AM	114	0	0	197	1	2	314
07:15 AM	132	0	0	220	3	0	355
07:30 AM	147	0	0	235	4	0	386
07:45 AM	123	0	0	270	3	0	396
Total	516	0	0	922	11	2	1451
08:00 AM	143	1	0	192	0	1	337
08:15 AM	125	1	1	179	1	0	307
08:30 AM	164	3	0	233	0	0	400
08:45 AM	152	1	1	207	0	0	361
Total	584	6	2	811	1	1	1405
Grand Total	1100	6	2	1733	12	3	2856
Apprch %	99.5	0.5	0.1	99.9	80	20	
Total %	38.5	0.2	0.1	60.7	0.4	0.1	
Cars	1070	6	2	1688	12	3	2781
% Cars	97.3	100	100	97.4	100	100	97.4
Trucks	30	0	0	45	0	0	75
% Trucks	2.7	0	0	2.6	0	0	2.6

	Route 18 From North			Route 18 From South			Jessica Lane From West			
Start Time	Thru	Right	App. Total	Left	Thru	App. Total	Left	Right	App. Total	Int. Total
Peak Hour Analysis From 07:00 AM to 08:45 AM - Peak 1 of 1										
Peak Hour for Entire Intersection Begins at 07:15 AM										
07:15 AM	132	0	132	0	220	220	3	0	3	355
07:30 AM	**147**	0	**147**	0	235	235	**4**	0	**4**	386
07:45 AM	123	0	123	0	**270**	**270**	3	0	3	**396**
08:00 AM	143	**1**	144	0	192	192	0	**1**	1	337
Total Volume	545	1	546	0	917	917	10	1	11	1474
% App. Total	99.8	0.2		0	100		90.9	9.1		
PHF	.927	.250	.929	.000	.849	.849	.625	.250	.688	.931
Cars	532	1	533	0	894	894	10	1	11	1438
% Cars	97.6	100	97.6	0	97.5	97.5	100	100	100	97.6
Trucks	13	0	13	0	23	23	0	0	0	36
% Trucks	2.4	0	2.4	0	2.5	2.5	0	0	0	2.4

Accurate Counts

978-664-2565

N/S Street : Route 18
E/W Street : Jessica Lane
City/State : Weymouth, MA
Weather : Clear

File Name : 84280001
Site Code : 84280001
Start Date : 5/5/2022
Page No : 2

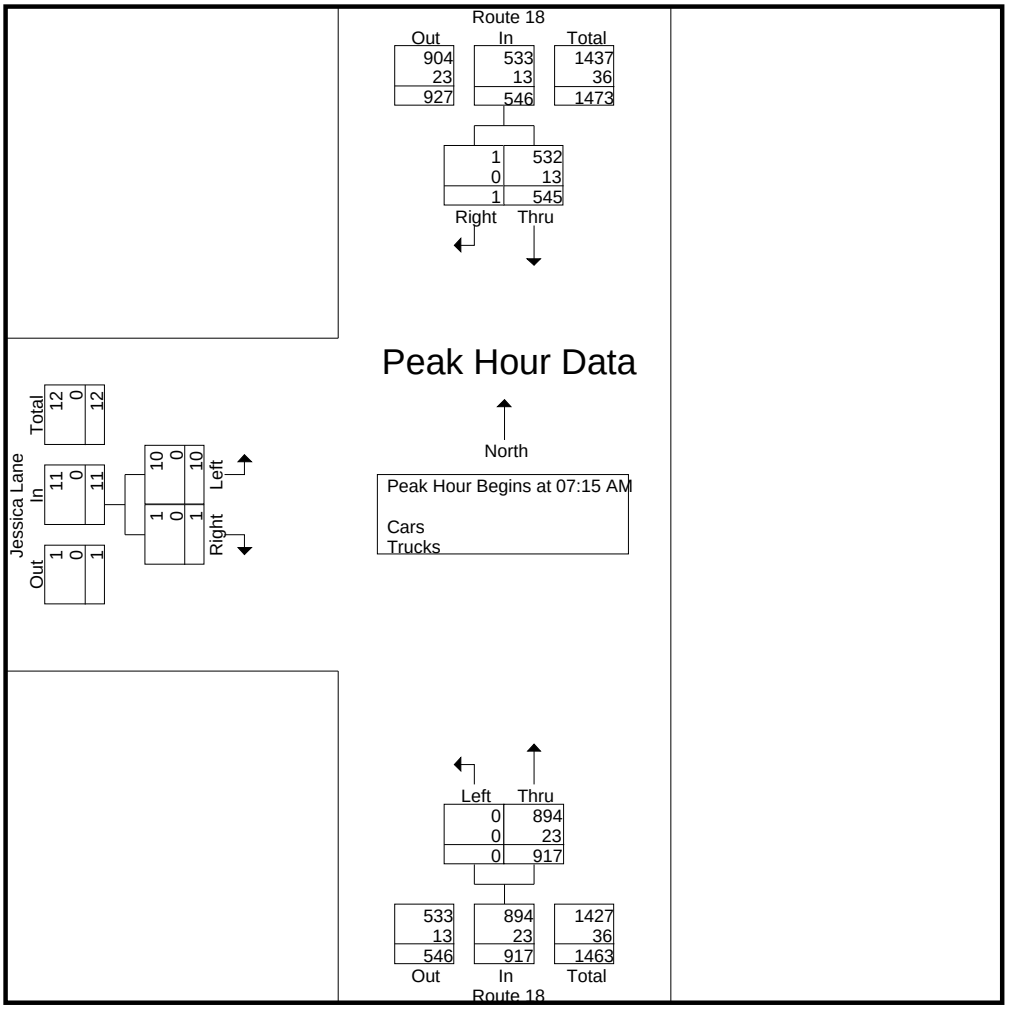

Peak Hour Analysis From 07:00 AM to 08:45 AM - Peak 1 of 1
Peak Hour for Each Approach Begins at:

	08:00 AM			07:00 AM			07:00 AM		
+0 mins.	143	1	144	0	197	197	1	**2**	3
+15 mins.	125	1	126	0	220	220	3	0	3
+30 mins.	**164**	**3**	**167**	0	235	235	**4**	0	**4**
+45 mins.	152	1	153	0	**270**	**270**	3	0	3
Total Volume	584	6	590	0	922	922	11	2	13
% App. Total	99	1		0	100		84.6	15.4	
PHF	.890	.500	.883	.000	.854	.854	.688	.250	.813
Cars	568	6	574	0	904	904	11	2	13
% Cars	97.3	100	97.3	0	98	98	100	100	100
Trucks	16	0	16	0	18	18	0	0	0
% Trucks	2.7	0	2.7	0	2	2	0	0	0

Accurate Counts

978-664-2565

N/S Street : Route 18
E/W Street : Jessica Lane
City/State : Weymouth, MA
Weather : Clear

File Name : 84280001
Site Code : 84280001
Start Date : 5/5/2022
Page No : 3

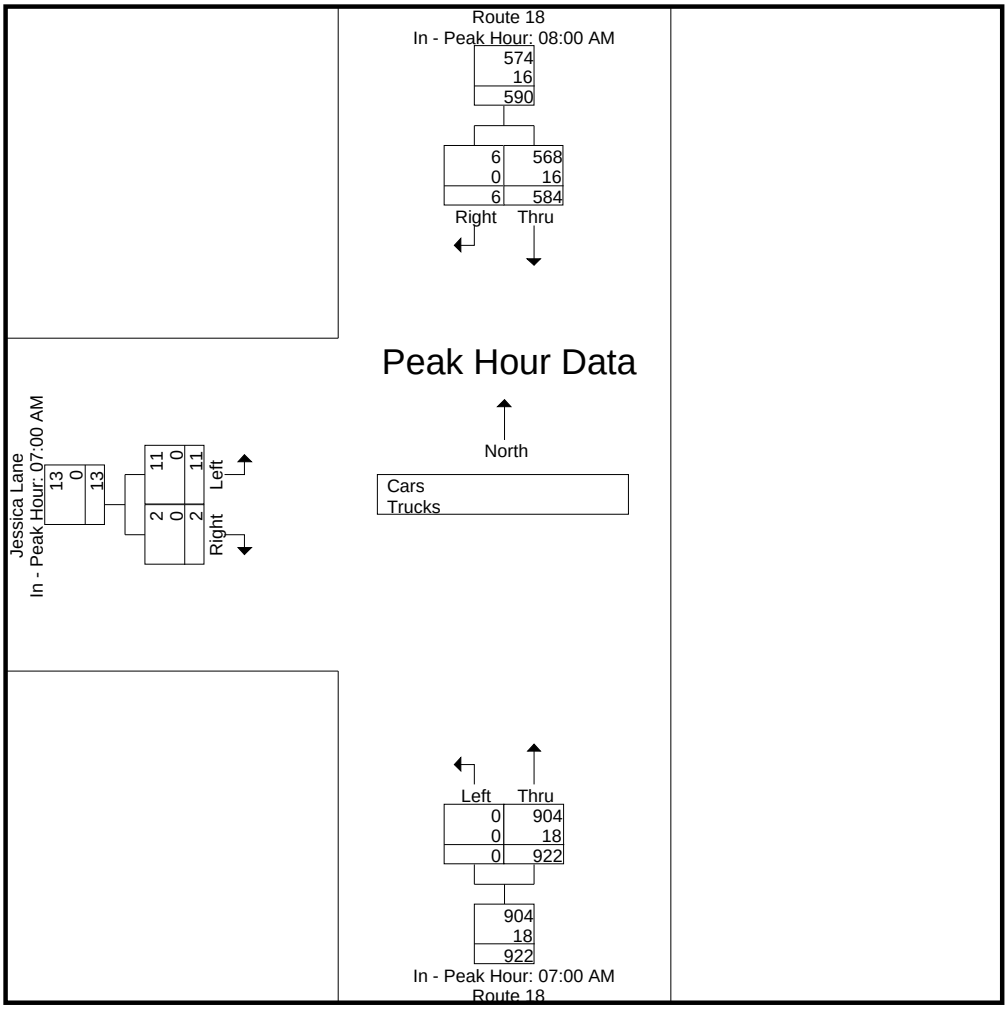

Accurate Counts

978-664-2565

N/S Street : Route 18
E/W Street : Jessica Lane
City/State : Weymouth, MA
Weather : Clear

File Name : 84280001
Site Code : 84280001
Start Date : 5/5/2022
Page No : 4

Groups Printed- Cars

	Route 18 From North		Route 18 From South		Jessica Lane From West		
Start Time	Thru	Right	Left	Thru	Left	Right	Int. Total
07:00 AM	111	0	0	194	1	2	308
07:15 AM	128	0	0	220	3	0	351
07:30 AM	145	0	0	228	4	0	377
07:45 AM	118	0	0	262	3	0	383
Total	502	0	0	904	11	2	1419
08:00 AM	141	1	0	184	0	1	327
08:15 AM	123	1	1	172	1	0	298
08:30 AM	157	3	0	227	0	0	387
08:45 AM	147	1	1	201	0	0	350
Total	568	6	2	784	1	1	1362
Grand Total	1070	6	2	1688	12	3	2781
Apprch %	99.4	0.6	0.1	99.9	80	20	
Total %	38.5	0.2	0.1	60.7	0.4	0.1	

	Route 18 From North			Route 18 From South			Jessica Lane From West			
Start Time	Thru	Right	App. Total	Left	Thru	App. Total	Left	Right	App. Total	Int. Total
Peak Hour Analysis From 07:00 AM to 08:45 AM - Peak 1 of 1										
Peak Hour for Entire Intersection Begins at 07:15 AM										
07:15 AM	128	0	128	0	220	220	3	0	3	351
07:30 AM	**145**	0	**145**	0	228	228	**4**	0	**4**	377
07:45 AM	118	0	118	0	**262**	**262**	3	0	3	**383**
08:00 AM	141	**1**	142	0	184	184	0	**1**	1	327
Total Volume	532	1	533	0	894	894	10	1	11	1438
% App. Total	99.8	0.2		0	100		90.9	9.1		
PHF	.917	.250	.919	.000	.853	.853	.625	.250	.688	.939

Accurate Counts

978-664-2565

N/S Street : Route 18
E/W Street : Jessica Lane
City/State : Weymouth, MA
Weather : Clear

File Name : 84280001
Site Code : 84280001
Start Date : 5/5/2022
Page No : 5

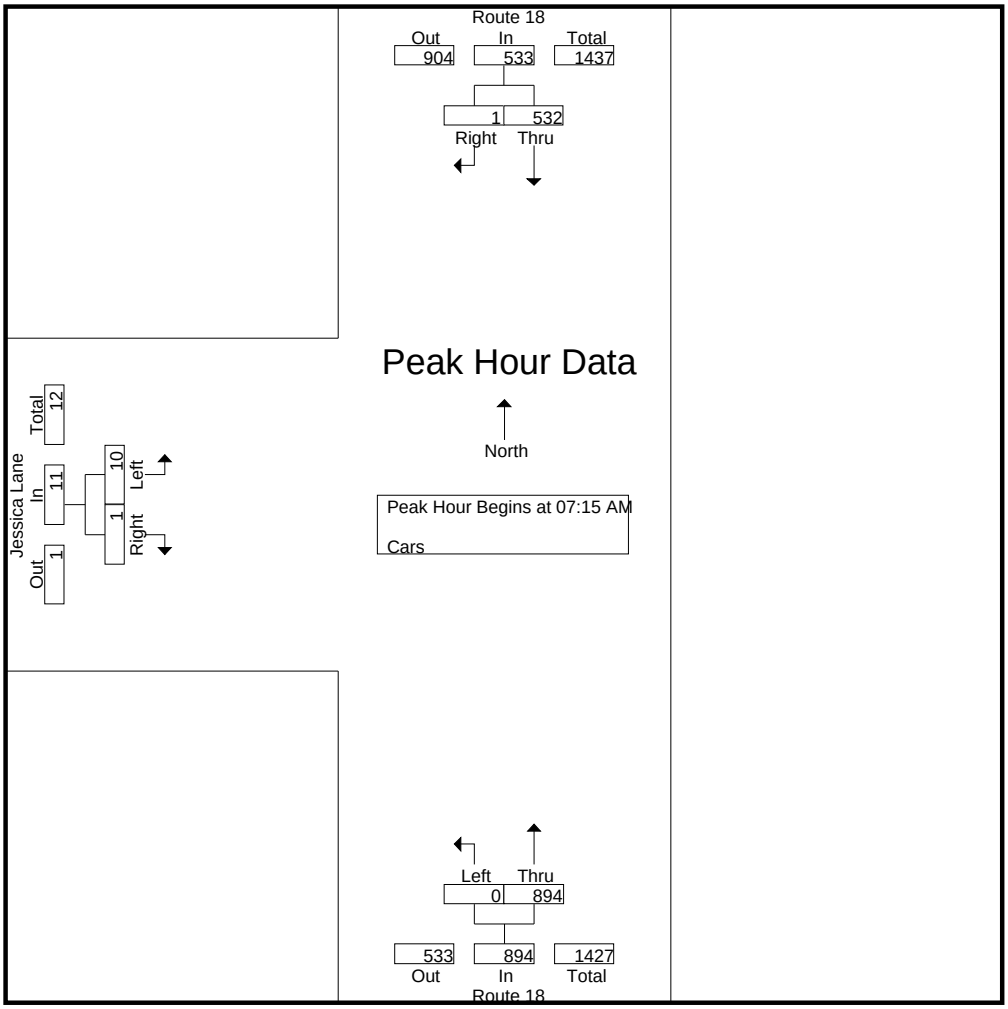

Peak Hour Analysis From 07:00 AM to 08:45 AM - Peak 1 of 1
Peak Hour for Each Approach Begins at:

	08:00 AM			07:00 AM			07:00 AM		
+0 mins.	141	1	142	0	194	194	1	**2**	3
+15 mins.	123	1	124	0	220	220	3	0	3
+30 mins.	**157**	**3**	**160**	0	228	228	**4**	0	**4**
+45 mins.	147	1	148	0	**262**	**262**	3	0	3
Total Volume	568	6	574	0	904	904	11	2	13
% App. Total	99	1		0	100		84.6	15.4	
PHF	.904	.500	.897	.000	.863	.863	.688	.250	.813

Accurate Counts
978-664-2565

N/S Street : Route 18
E/W Street : Jessica Lane
City/State : Weymouth, MA
Weather : Clear

File Name : 84280001
Site Code : 84280001
Start Date : 5/5/2022
Page No : 6

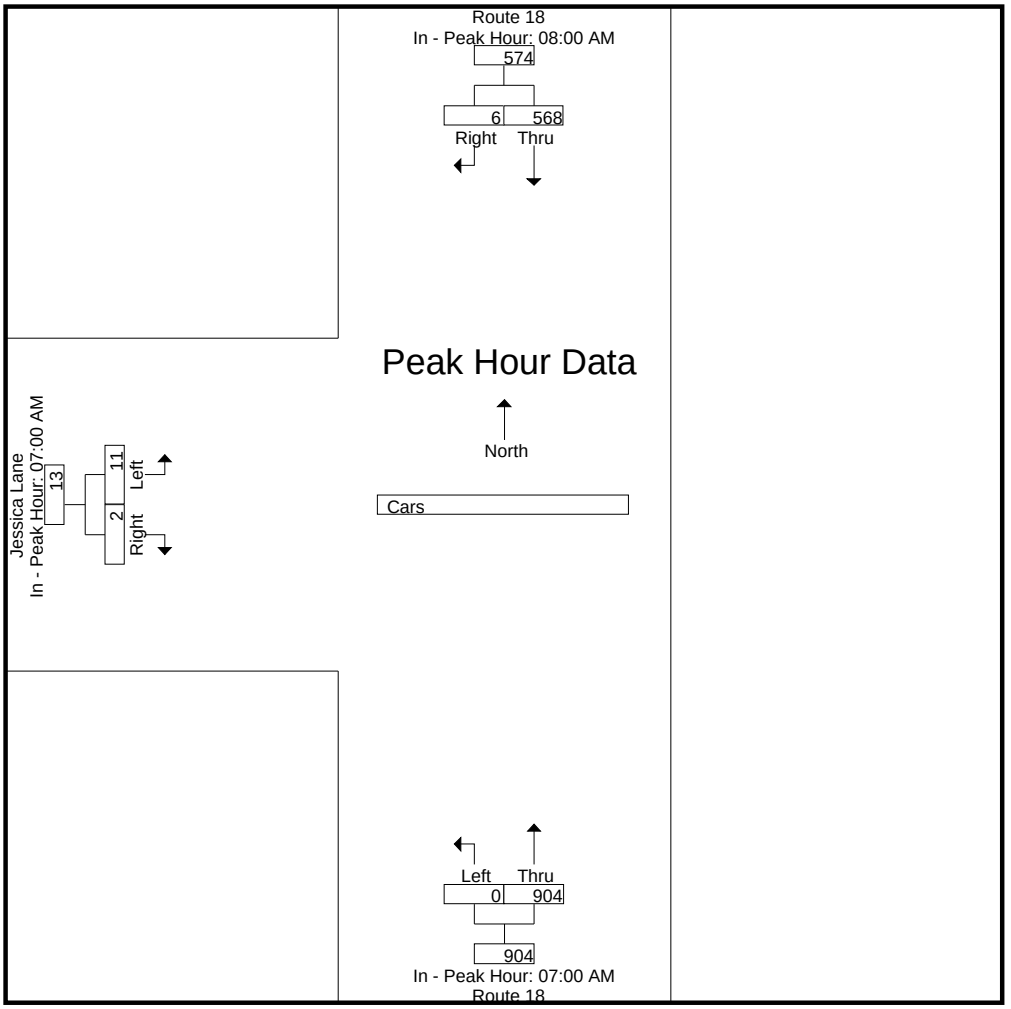

Accurate Counts

978-664-2565

N/S Street : Route 18
E/W Street : Jessica Lane
City/State : Weymouth, MA
Weather : Clear

File Name : 84280001
Site Code : 84280001
Start Date : 5/5/2022
Page No : 7

Groups Printed- Trucks

	Route 18 From North		Route 18 From South		Jessica Lane From West		
Start Time	Thru	Right	Left	Thru	Left	Right	Int. Total
07:00 AM	3	0	0	3	0	0	6
07:15 AM	4	0	0	0	0	0	4
07:30 AM	2	0	0	7	0	0	9
07:45 AM	5	0	0	8	0	0	13
Total	14	0	0	18	0	0	32
08:00 AM	2	0	0	8	0	0	10
08:15 AM	2	0	0	7	0	0	9
08:30 AM	7	0	0	6	0	0	13
08:45 AM	5	0	0	6	0	0	11
Total	16	0	0	27	0	0	43
Grand Total	30	0	0	45	0	0	75
Apprch %	100	0	0	100	0	0	
Total %	40	0	0	60	0	0	

	Route 18 From North			Route 18 From South			Jessica Lane From West			
Start Time	Thru	Right	App. Total	Left	Thru	App. Total	Left	Right	App. Total	Int. Total
Peak Hour Analysis From 07:00 AM to 08:45 AM - Peak 1 of 1										
Peak Hour for Entire Intersection Begins at 07:45 AM										
07:45 AM	5	0	5	0	**8**	**8**	0	0	0	**13**
08:00 AM	2	0	2	0	8	8	0	0	0	10
08:15 AM	2	0	2	0	7	7	0	0	0	9
08:30 AM	**7**	0	**7**	0	6	6	0	0	0	13
Total Volume	16	0	16	0	29	29	0	0	0	45
% App. Total	100	0		0	100		0	0		
PHF	.571	.000	.571	.000	.906	.906	.000	.000	.000	.865

Accurate Counts

978-664-2565

N/S Street : Route 18
E/W Street : Jessica Lane
City/State : Weymouth, MA
Weather : Clear

File Name : 84280001
Site Code : 84280001
Start Date : 5/5/2022
Page No : 8

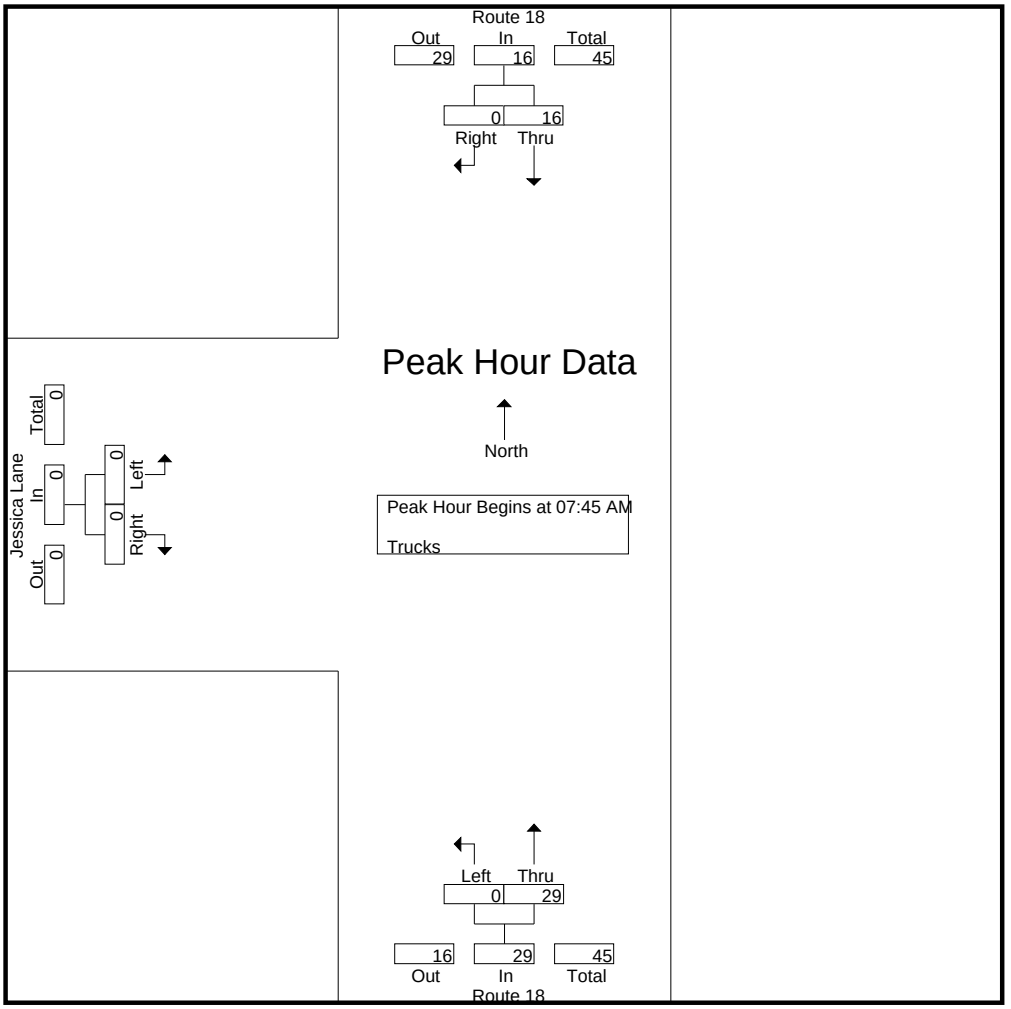

Peak Hour Analysis From 07:00 AM to 08:45 AM - Peak 1 of 1

Peak Hour for Each Approach Begins at:

	07:45 AM			07:30 AM			07:00 AM		
+0 mins.	5	0	5	0	7	7	0	0	0
+15 mins.	2	0	2	0	**8**	**8**	0	0	0
+30 mins.	2	0	2	0	8	8	0	0	0
+45 mins.	**7**	0	**7**	0	7	7	0	0	0
Total Volume	16	0	16	0	30	30	0	0	0
% App. Total	100	0		0	100		0	0	
PHF	.571	.000	.571	.000	.938	.938	.000	.000	.000

Accurate Counts
978-664-2565

N/S Street : Route 18
E/W Street : Jessica Lane
City/State : Weymouth, MA
Weather : Clear

File Name : 84280001
Site Code : 84280001
Start Date : 5/5/2022
Page No : 9

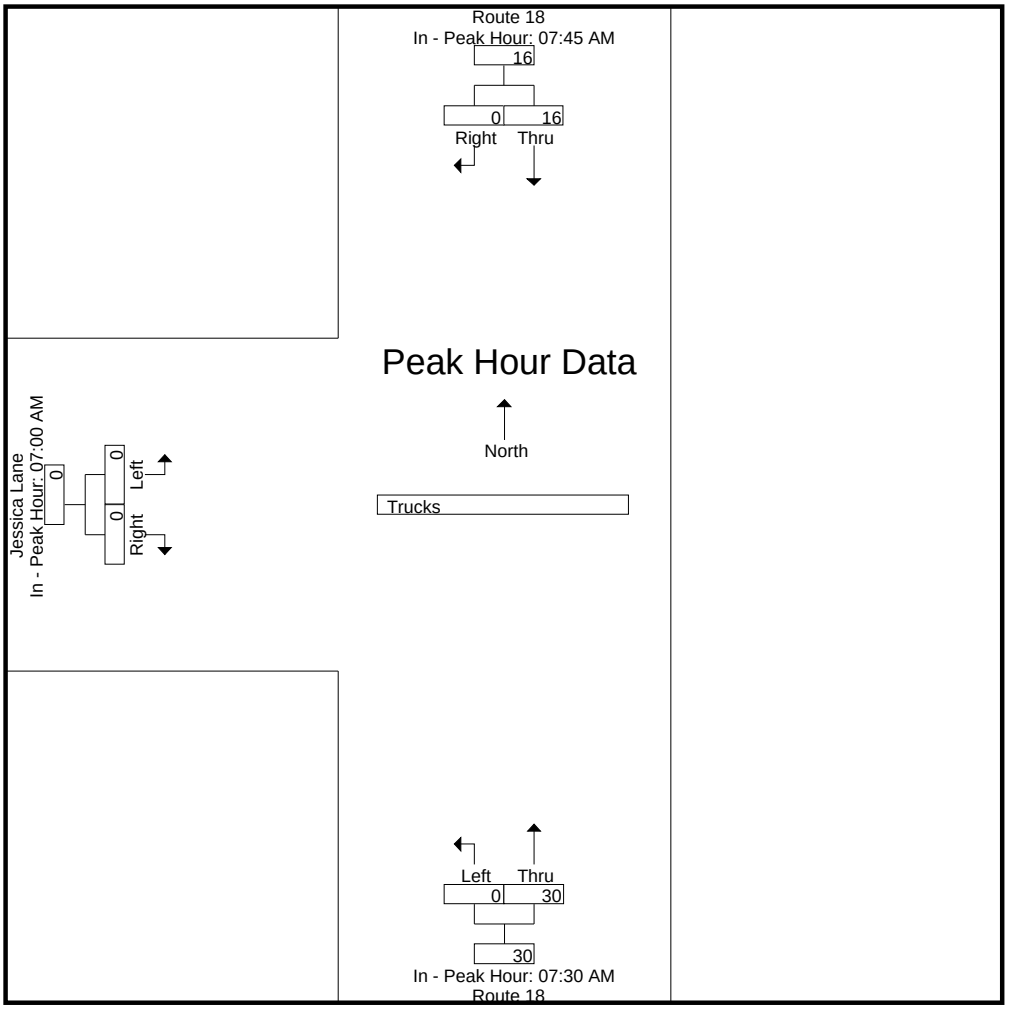

Accurate Counts

978-664-2565

N/S Street : Route 18
E/W Street : Jessica Lane
City/State : Weymouth, MA
Weather : Clear

File Name : 84280001
Site Code : 84280001
Start Date : 5/5/2022
Page No : 10

Groups Printed- Bikes Peds

	Route 18 From North			Route 18 From South			Jessica Lane From West					
Start Time	Thru	Right	Peds	Left	Thru	Peds	Left	Right	Peds	Exclu. Total	Inclu. Total	Int. Total
07:00 AM	1	0	0	0	1	0	0	0	0	0	2	2
07:15 AM	0	0	0	0	0	0	0	0	0	0	0	0
07:30 AM	0	0	0	0	0	0	0	0	0	0	0	0
07:45 AM	0	0	0	0	1	0	0	0	0	0	1	1
Total	1	0	0	0	2	0	0	0	0	0	3	3
08:00 AM	0	0	0	0	0	0	0	0	0	0	0	0
08:15 AM	0	0	0	0	0	0	0	0	0	0	0	0
08:30 AM	0	0	0	0	0	0	0	0	0	0	0	0
08:45 AM	0	0	0	0	0	0	0	0	0	0	0	0
Total	0	0	0	0	0	0	0	0	0	0	0	0
Grand Total	1	0	0	0	2	0	0	0	0	0	3	3
Apprch %	100	0		0	100		0	0				
Total %	33.3	0		0	66.7		0	0		0	100	

	Route 18 From North			Route 18 From South			Jessica Lane From West			
Start Time	Thru	Right	App. Total	Left	Thru	App. Total	Left	Right	App. Total	Int. Total
Peak Hour Analysis From 07:00 AM to 08:45 AM - Peak 1 of 1										
Peak Hour for Entire Intersection Begins at 07:00 AM										
07:00 AM	**1**	0	**1**	0	**1**	**1**	0	0	0	**2**
07:15 AM	0	0	0	0	0	0	0	0	0	0
07:30 AM	0	0	0	0	0	0	0	0	0	0
07:45 AM	0	0	0	0	1	1	0	0	0	1
Total Volume	1	0	1	0	2	2	0	0	0	3
% App. Total	100	0		0	100		0	0		
PHF	.250	.000	.250	.000	.500	.500	.000	.000	.000	.375

Accurate Counts

978-664-2565

N/S Street : Route 18
E/W Street : Jessica Lane
City/State : Weymouth, MA
Weather : Clear

File Name : 84280001
Site Code : 84280001
Start Date : 5/5/2022
Page No : 11

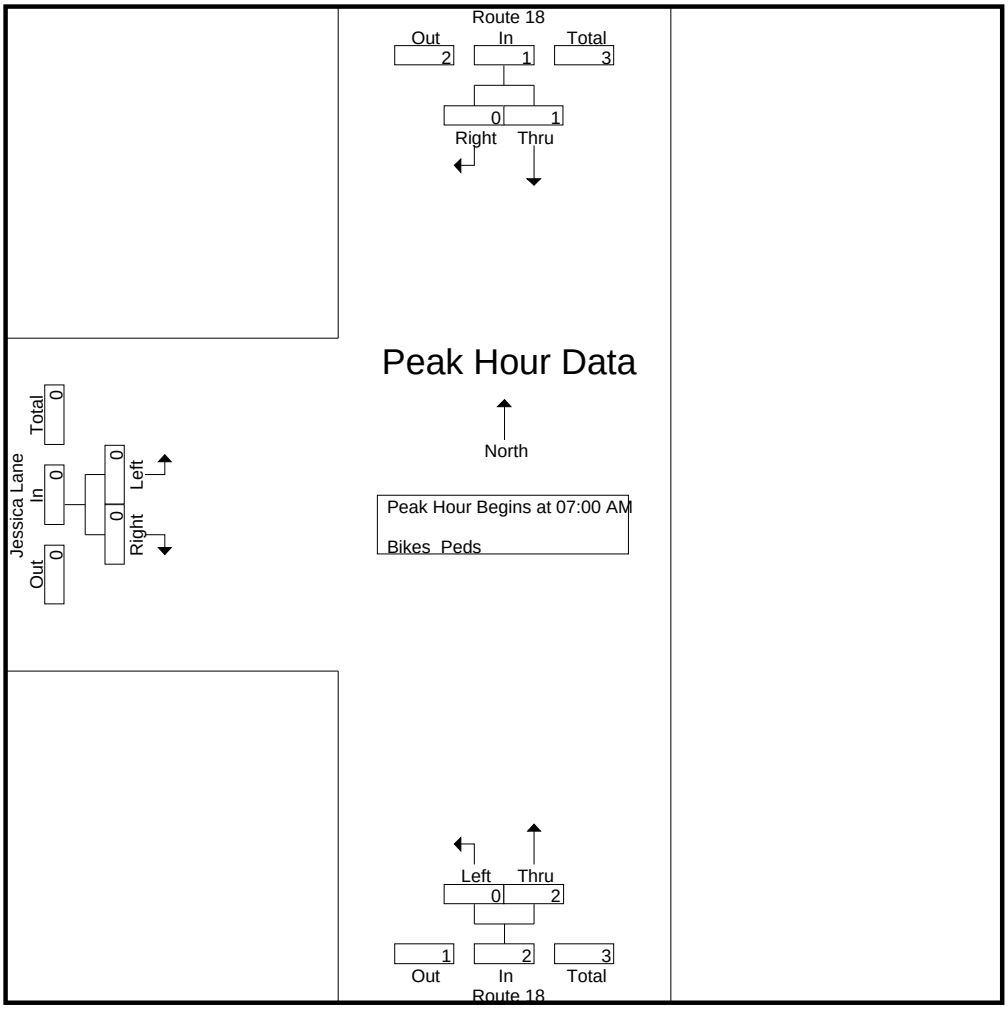

Peak Hour Analysis From 07:00 AM to 08:45 AM - Peak 1 of 1

Peak Hour for Each Approach Begins at:

	07:00 AM			07:00 AM			07:00 AM		
+0 mins.	**1**	0	**1**	0	**1**	**1**	0	0	0
+15 mins.	0	0	0	0	0	0	0	0	0
+30 mins.	0	0	0	0	0	0	0	0	0
+45 mins.	0	0	0	0	1	1	0	0	0
Total Volume	1	0	1	0	2	2	0	0	0
% App. Total	100	0		0	100		0	0	
PHF	.250	.000	.250	.000	.500	.500	.000	.000	.000

Accurate Counts
978-664-2565

N/S Street : Route 18
E/W Street : Jessica Lane
City/State : Weymouth, MA
Weather : Clear

File Name : 84280001
Site Code : 84280001
Start Date : 5/5/2022
Page No : 12

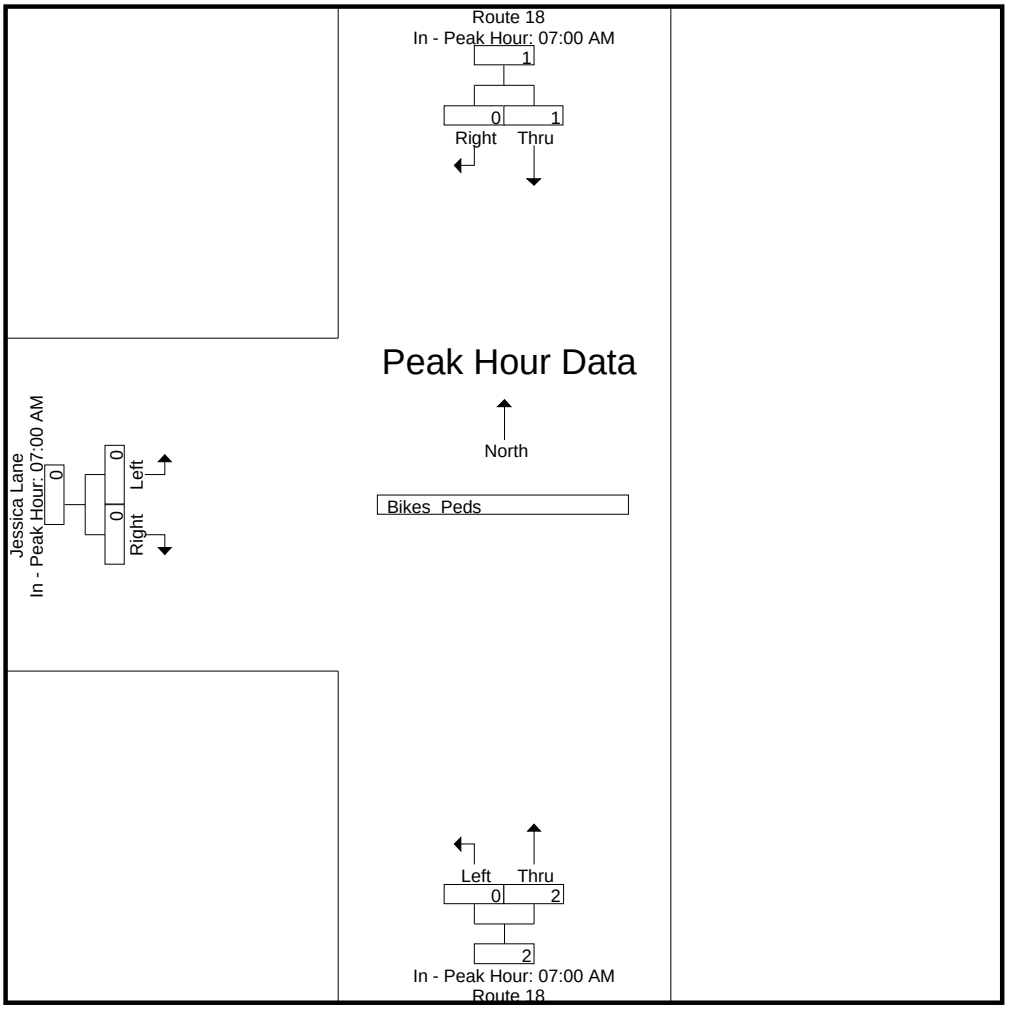

Accurate Counts

978-664-2565

N/S Street : Route 18
E/W Street : Jessica Lane
City/State : Weymouth, MA
Weather : Clear

File Name : 84280001
Site Code : 84280001
Start Date : 5/5/2022
Page No : 1

Groups Printed- Cars - Trucks

	Route 18 From North		Route 18 From South		Jessica Lane From West		
Start Time	Thru	Right	Left	Thru	Left	Right	Int. Total
04:00 PM	266	2	0	166	1	1	436
04:15 PM	259	1	0	166	0	1	427
04:30 PM	239	1	0	163	0	0	403
04:45 PM	282	3	1	156	0	0	442
Total	1046	7	1	651	1	2	1708
05:00 PM	247	3	1	179	1	2	433
05:15 PM	298	2	0	190	1	0	491
05:30 PM	207	0	1	198	0	0	406
05:45 PM	232	0	1	180	1	0	414
Total	984	5	3	747	3	2	1744
Grand Total	2030	12	4	1398	4	4	3452
Apprch %	99.4	0.6	0.3	99.7	50	50	
Total %	58.8	0.3	0.1	40.5	0.1	0.1	
Cars	1992	12	4	1394	4	4	3410
% Cars	98.1	100	100	99.7	100	100	98.8
Trucks	38	0	0	4	0	0	42
% Trucks	1.9	0	0	0.3	0	0	1.2

	Route 18 From North			Route 18 From South			Jessica Lane From West			
Start Time	Thru	Right	App. Total	Left	Thru	App. Total	Left	Right	App. Total	Int. Total
Peak Hour Analysis From 04:00 PM to 05:45 PM - Peak 1 of 1										
Peak Hour for Entire Intersection Begins at 04:45 PM										
04:45 PM	282	**3**	285	**1**	156	157	0	0	0	442
05:00 PM	247	3	250	1	179	180	**1**	**2**	**3**	433
05:15 PM	**298**	2	**300**	0	190	190	1	0	1	**491**
05:30 PM	207	0	207	1	**198**	**199**	0	0	0	406
Total Volume	1034	8	1042	3	723	726	2	2	4	1772
% App. Total	99.2	0.8		0.4	99.6		50	50		
PHF	.867	.667	.868	.750	.913	.912	.500	.250	.333	.902
Cars	1024	8	1032	3	721	724	2	2	4	1760
% Cars	99.0	100	99.0	100	99.7	99.7	100	100	100	99.3
Trucks	10	0	10	0	2	2	0	0	0	12
% Trucks	1.0	0	1.0	0	0.3	0.3	0	0	0	0.7

Accurate Counts

978-664-2565

N/S Street : Route 18
E/W Street : Jessica Lane
City/State : Weymouth, MA
Weather : Clear

File Name : 84280001
Site Code : 84280001
Start Date : 5/5/2022
Page No : 2

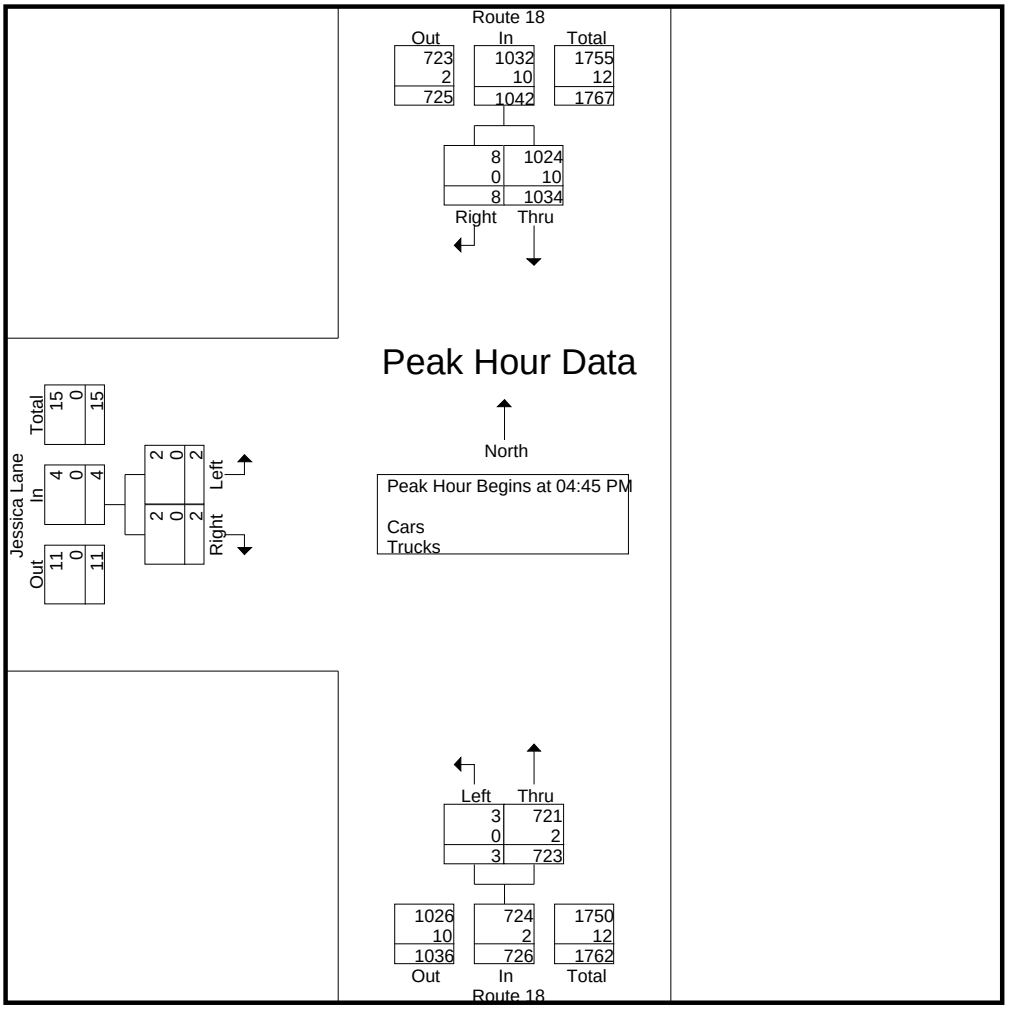

Peak Hour Analysis From 04:00 PM to 05:45 PM - Peak 1 of 1

Peak Hour for Each Approach Begins at:

	04:30 PM			05:00 PM			05:00 PM		
+0 mins.	239	1	240	**1**	179	180	**1**	**2**	**3**
+15 mins.	282	**3**	285	0	190	190	1	0	1
+30 mins.	247	3	250	1	**198**	**199**	0	0	0
+45 mins.	**298**	2	**300**	1	180	181	1	0	1
Total Volume	1066	9	1075	3	747	750	3	2	5
% App. Total	99.2	0.8		0.4	99.6		60	40	
PHF	.894	.750	.896	.750	.943	.942	.750	.250	.417
Cars	1050	9	1059	3	744	747	3	2	5
% Cars	98.5	100	98.5	100	99.6	99.6	100	100	100
Trucks	16	0	16	0	3	3	0	0	0
% Trucks	1.5	0	1.5	0	0.4	0.4	0	0	0

Accurate Counts

978-664-2565

N/S Street : Route 18
E/W Street : Jessica Lane
City/State : Weymouth, MA
Weather : Clear

File Name : 84280001
Site Code : 84280001
Start Date : 5/5/2022
Page No : 3

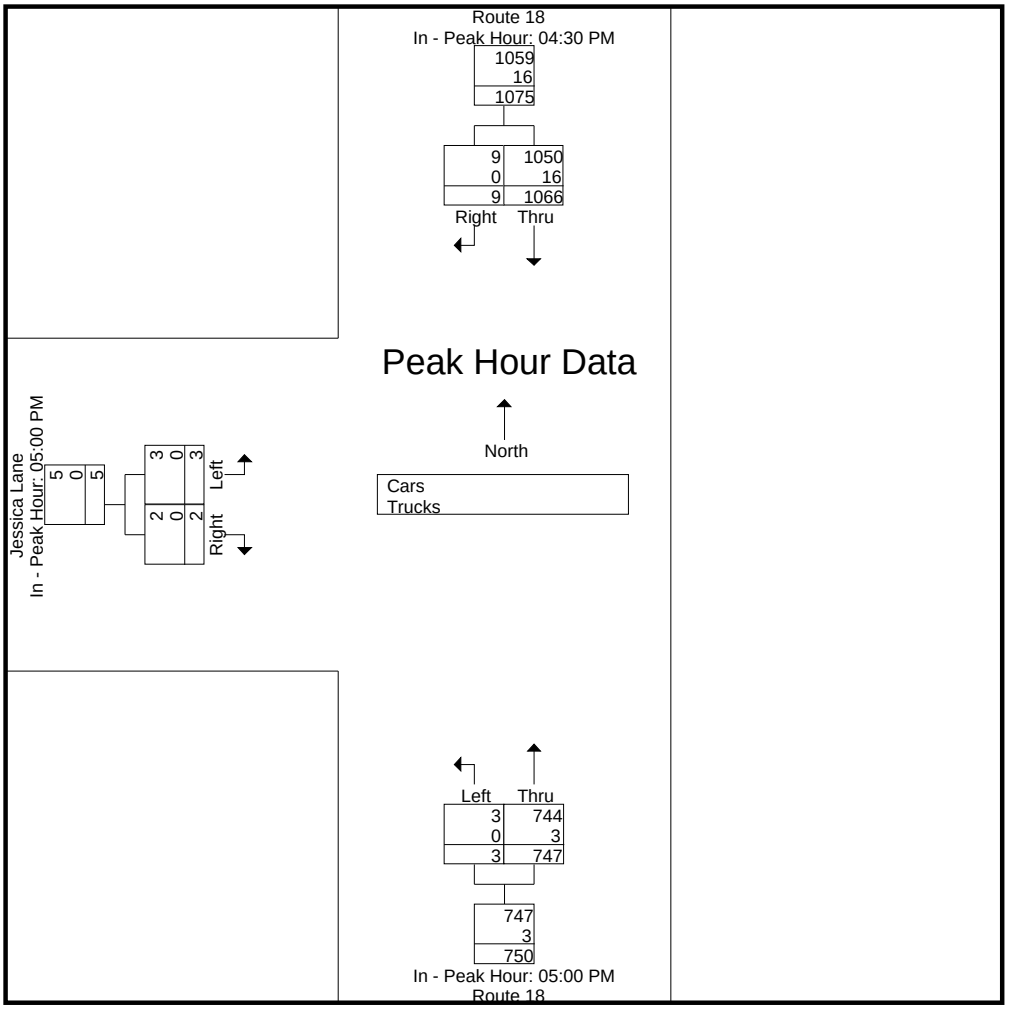

Accurate Counts

978-664-2565

N/S Street : Route 18
E/W Street : Jessica Lane
City/State : Weymouth, MA
Weather : Clear

File Name : 84280001
Site Code : 84280001
Start Date : 5/5/2022
Page No : 4

Groups Printed- Cars

	Route 18 From North		Route 18 From South		Jessica Lane From West		
Start Time	Thru	Right	Left	Thru	Left	Right	Int. Total
04:00 PM	257	2	0	166	1	1	427
04:15 PM	252	1	0	166	0	1	420
04:30 PM	230	1	0	163	0	0	394
04:45 PM	278	3	1	155	0	0	437
Total	1017	7	1	650	1	2	1678
05:00 PM	245	3	1	179	1	2	431
05:15 PM	297	2	0	189	1	0	489
05:30 PM	204	0	1	198	0	0	403
05:45 PM	229	0	1	178	1	0	409
Total	975	5	3	744	3	2	1732
Grand Total	1992	12	4	1394	4	4	3410
Apprch %	99.4	0.6	0.3	99.7	50	50	
Total %	58.4	0.4	0.1	40.9	0.1	0.1	

	Route 18 From North			Route 18 From South			Jessica Lane From West			
Start Time	Thru	Right	App. Total	Left	Thru	App. Total	Left	Right	App. Total	Int. Total
Peak Hour Analysis From 04:00 PM to 05:45 PM - Peak 1 of 1										
Peak Hour for Entire Intersection Begins at 04:45 PM										
04:45 PM	278	**3**	281	**1**	155	156	0	0	0	437
05:00 PM	245	3	248	1	179	180	**1**	**2**	**3**	431
05:15 PM	**297**	2	**299**	0	189	189	1	0	1	**489**
05:30 PM	204	0	204	1	**198**	**199**	0	0	0	403
Total Volume	1024	8	1032	3	721	724	2	2	4	1760
% App. Total	99.2	0.8		0.4	99.6		50	50		
PHF	.862	.667	.863	.750	.910	.910	.500	.250	.333	.900

Accurate Counts

978-664-2565

N/S Street : Route 18
E/W Street : Jessica Lane
City/State : Weymouth, MA
Weather : Clear

File Name : 84280001
Site Code : 84280001
Start Date : 5/5/2022
Page No : 5

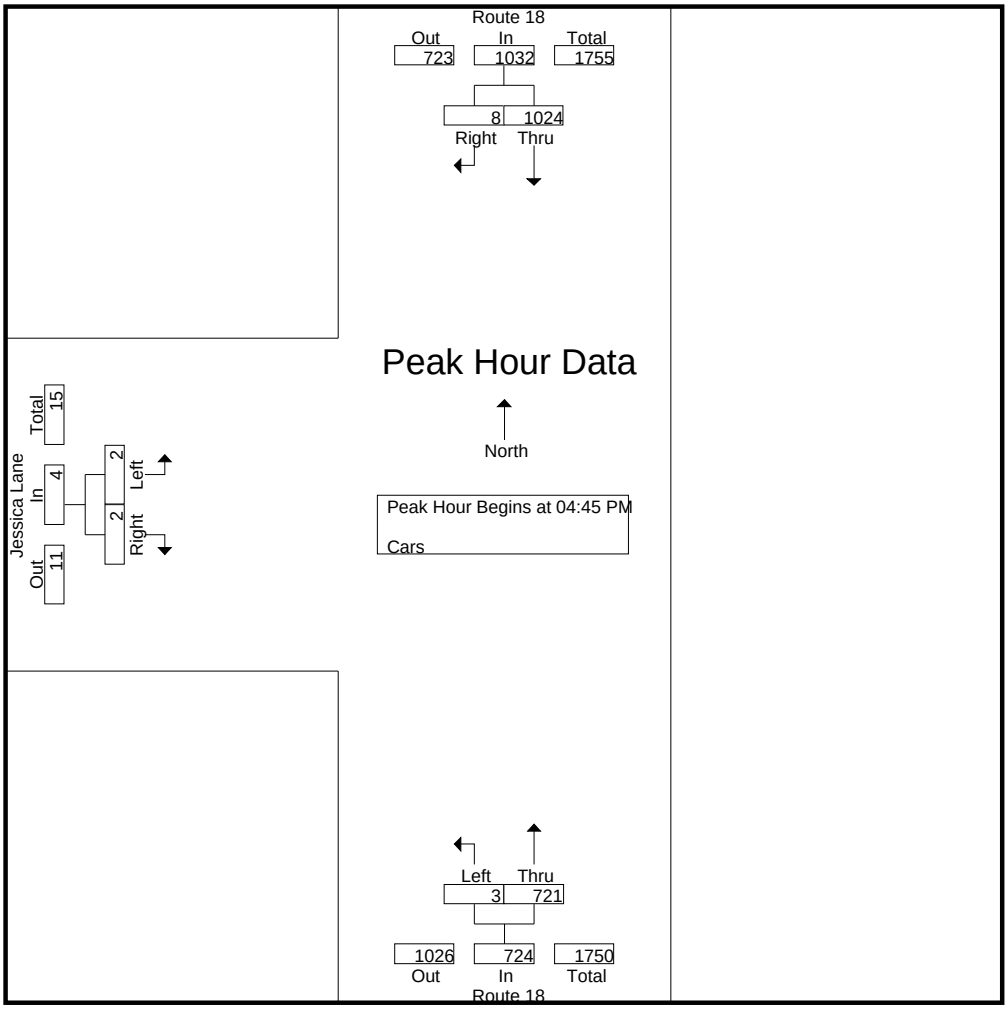

Peak Hour Analysis From 04:00 PM to 05:45 PM - Peak 1 of 1
Peak Hour for Each Approach Begins at:

	04:30 PM			05:00 PM			05:00 PM		
+0 mins.	230	1	231	**1**	179	180	**1**	**2**	**3**
+15 mins.	278	**3**	281	0	189	189	1	0	1
+30 mins.	245	3	248	1	**198**	**199**	0	0	0
+45 mins.	**297**	2	**299**	1	178	179	1	0	1
Total Volume	1050	9	1059	3	744	747	3	2	5
% App. Total	99.2	0.8		0.4	99.6		60	40	
PHF	.884	.750	.885	.750	.939	.938	.750	.250	.417

Accurate Counts
978-664-2565

N/S Street : Route 18
E/W Street : Jessica Lane
City/State : Weymouth, MA
Weather : Clear

File Name : 84280001
Site Code : 84280001
Start Date : 5/5/2022
Page No : 6

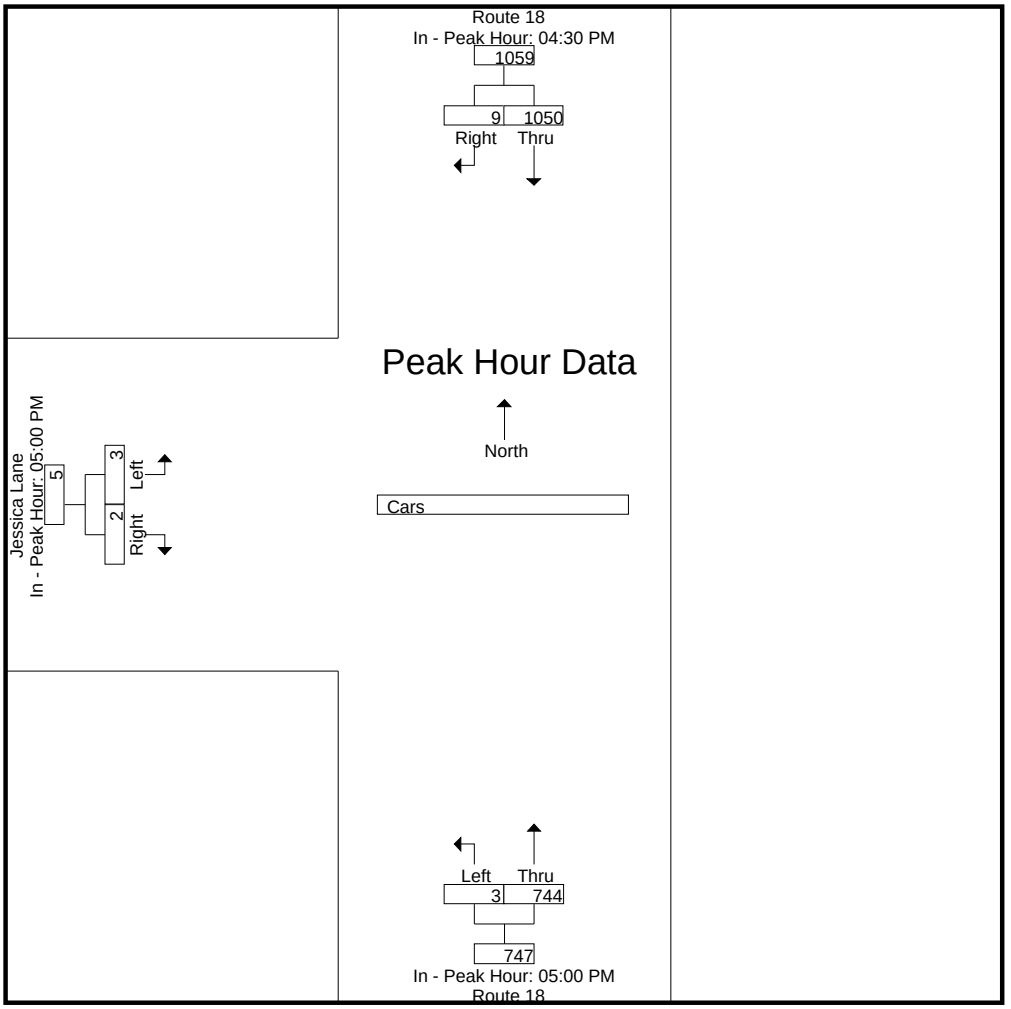

Accurate Counts

978-664-2565

N/S Street : Route 18
E/W Street : Jessica Lane
City/State : Weymouth, MA
Weather : Clear

File Name : 84280001
Site Code : 84280001
Start Date : 5/5/2022
Page No : 7

Groups Printed- Trucks

	Route 18 From North		Route 18 From South		Jessica Lane From West		
Start Time	Thru	Right	Left	Thru	Left	Right	Int. Total
04:00 PM	9	0	0	0	0	0	9
04:15 PM	7	0	0	0	0	0	7
04:30 PM	9	0	0	0	0	0	9
04:45 PM	4	0	0	1	0	0	5
Total	29	0	0	1	0	0	30
05:00 PM	2	0	0	0	0	0	2
05:15 PM	1	0	0	1	0	0	2
05:30 PM	3	0	0	0	0	0	3
05:45 PM	3	0	0	2	0	0	5
Total	9	0	0	3	0	0	12
Grand Total	38	0	0	4	0	0	42
Apprch %	100	0	0	100	0	0	
Total %	90.5	0	0	9.5	0	0	

	Route 18 From North			Route 18 From South			Jessica Lane From West			
Start Time	Thru	Right	App. Total	Left	Thru	App. Total	Left	Right	App. Total	Int. Total
Peak Hour Analysis From 04:00 PM to 05:45 PM - Peak 1 of 1										
Peak Hour for Entire Intersection Begins at 04:00 PM										
04:00 PM	**9**	0	**9**	0	0	0	0	0	0	**9**
04:15 PM	7	0	7	0	0	0	0	0	0	7
04:30 PM	9	0	9	0	0	0	0	0	0	9
04:45 PM	4	0	4	0	**1**	**1**	0	0	0	5
Total Volume	29	0	29	0	1	1	0	0	0	30
% App. Total	100	0		0	100		0	0		
PHF	.806	.000	.806	.000	.250	.250	.000	.000	.000	.833

Accurate Counts

978-664-2565

N/S Street : Route 18
E/W Street : Jessica Lane
City/State : Weymouth, MA
Weather : Clear

File Name : 84280001
Site Code : 84280001
Start Date : 5/5/2022
Page No : 8

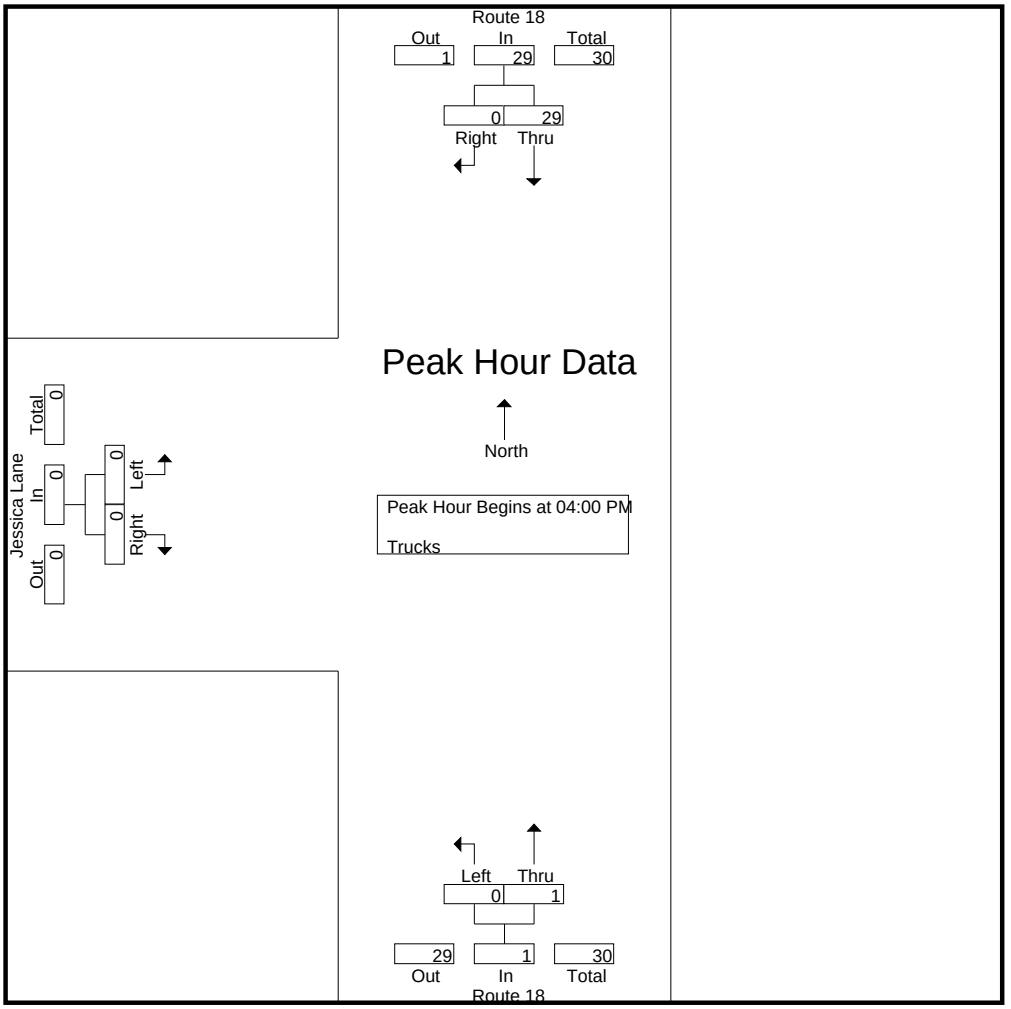

Peak Hour Analysis From 04:00 PM to 05:45 PM - Peak 1 of 1
Peak Hour for Each Approach Begins at:

	04:00 PM			05:00 PM			04:00 PM		
+0 mins.	**9**	0	**9**	0	0	0	0	0	0
+15 mins.	7	0	7	0	1	1	0	0	0
+30 mins.	9	0	9	0	0	0	0	0	0
+45 mins.	4	0	4	0	**2**	**2**	0	0	0
Total Volume	29	0	29	0	3	3	0	0	0
% App. Total	100	0		0	100		0	0	
PHF	.806	.000	.806	.000	.375	.375	.000	.000	.000

Accurate Counts

978-664-2565

N/S Street : Route 18
E/W Street : Jessica Lane
City/State : Weymouth, MA
Weather : Clear

File Name : 84280001
Site Code : 84280001
Start Date : 5/5/2022
Page No : 9

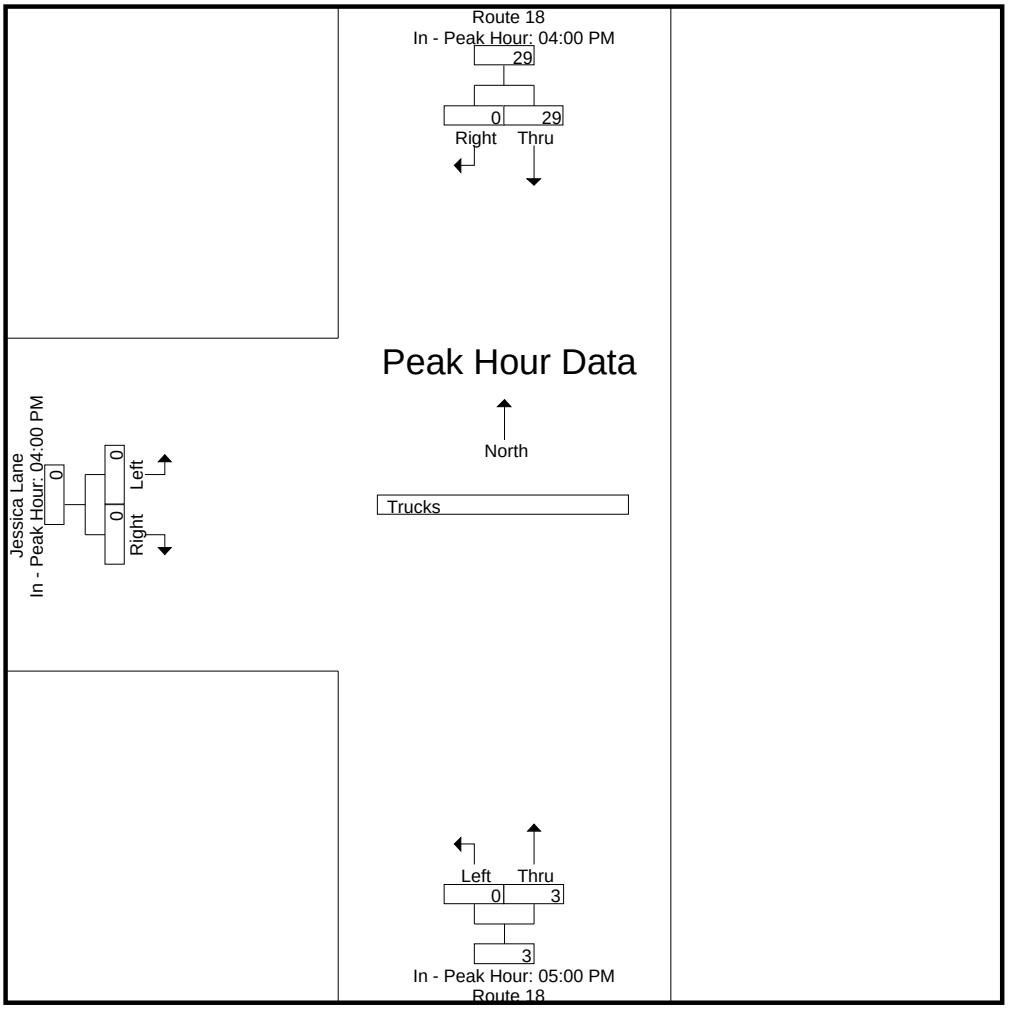

Accurate Counts

978-664-2565

N/S Street : Route 18
E/W Street : Jessica Lane
City/State : Weymouth, MA
Weather : Clear

File Name : 84280001
Site Code : 84280001
Start Date : 5/5/2022
Page No : 10

Groups Printed- Bikes Peds

	Route 18 From North			Route 18 From South			Jessica Lane From West					
Start Time	Thru	Right	Peds	Left	Thru	Peds	Left	Right	Peds	Exclu. Total	Inclu. Total	Int. Total
04:00 PM	0	0	0	0	0	0	0	0	0	0	0	0
04:15 PM	0	0	0	0	0	0	0	0	0	0	0	0
04:30 PM	0	0	0	0	0	0	0	0	0	0	0	0
04:45 PM	0	0	0	0	0	0	0	0	0	0	0	0
Total	0	0	0	0	0	0	0	0	0	0	0	0
05:00 PM	0	0	0	0	0	0	0	0	0	0	0	0
05:15 PM	0	0	0	0	0	0	0	0	0	0	0	0
05:30 PM	1	0	0	0	0	0	0	0	0	0	1	1
05:45 PM	0	0	0	0	0	0	0	0	0	0	0	0
Total	1	0	0	0	0	0	0	0	0	0	1	1
Grand Total	1	0	0	0	0	0	0	0	0	0	1	1
Apprch %	100	0		0	0		0	0				
Total %	100	0		0	0		0	0		0	100	

	Route 18 From North			Route 18 From South			Jessica Lane From West			
Start Time	Thru	Right	App. Total	Left	Thru	App. Total	Left	Right	App. Total	Int. Total
Peak Hour Analysis From 04:00 PM to 05:45 PM - Peak 1 of 1										
Peak Hour for Entire Intersection Begins at 04:45 PM										
04:45 PM	0	0	0	0	0	0	0	0	0	0
05:00 PM	0	0	0	0	0	0	0	0	0	0
05:15 PM	0	0	0	0	0	0	0	0	0	0
05:30 PM	**1**	0	**1**	0	0	0	0	0	0	**1**
Total Volume	1	0	1	0	0	0	0	0	0	1
% App. Total	100	0		0	0		0	0		
PHF	.250	.000	.250	.000	.000	.000	.000	.000	.000	.250

Accurate Counts

978-664-2565

N/S Street : Route 18
E/W Street : Jessica Lane
City/State : Weymouth, MA
Weather : Clear

File Name : 84280001
Site Code : 84280001
Start Date : 5/5/2022
Page No : 11

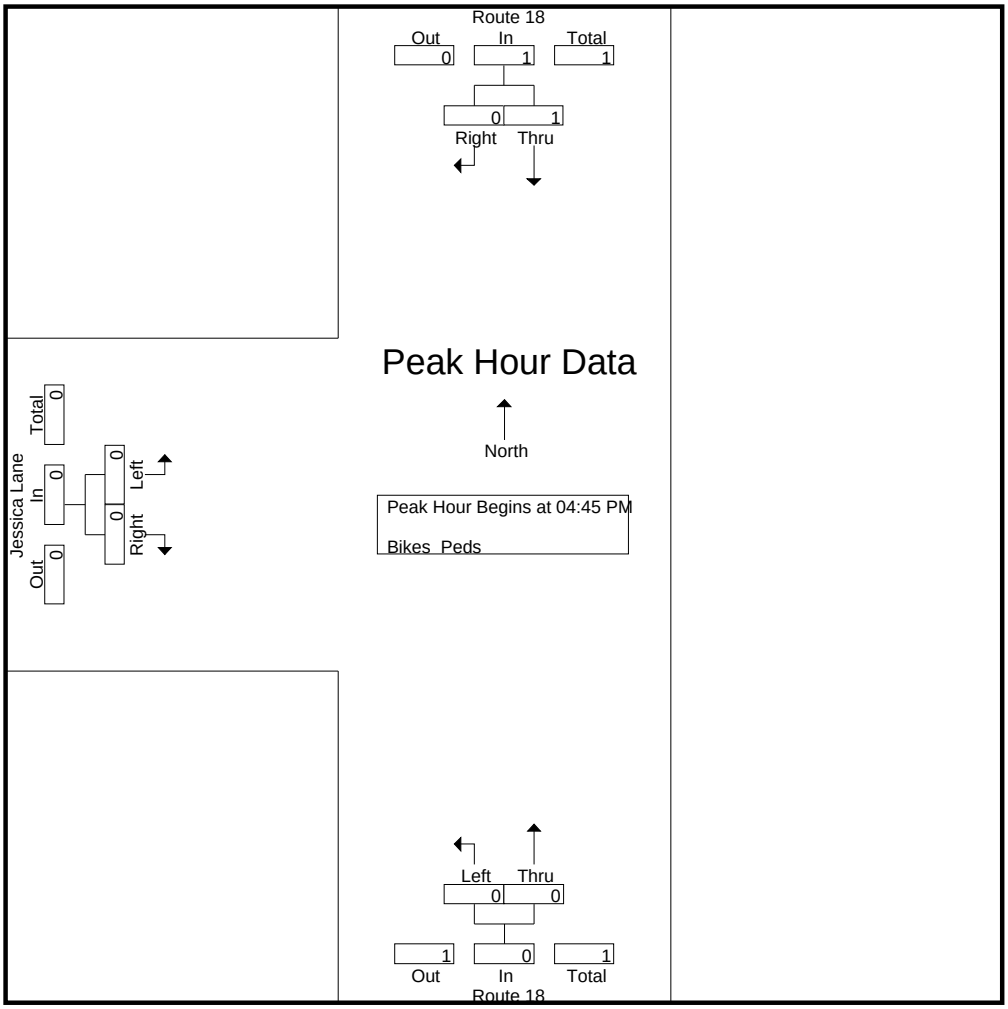

Peak Hour Analysis From 04:00 PM to 05:45 PM - Peak 1 of 1
Peak Hour for Each Approach Begins at:

	04:45 PM			04:00 PM			04:00 PM		
+0 mins.	0	0	0	0	0	0	0	0	0
+15 mins.	0	0	0	0	0	0	0	0	0
+30 mins.	0	0	0	0	0	0	0	0	0
+45 mins.	**1**	0	**1**	0	0	0	0	0	0
Total Volume	1	0	1	0	0	0	0	0	0
% App. Total	100	0		0	0		0	0	
PHF	.250	.000	.250	.000	.000	.000	.000	.000	.000

Accurate Counts
978-664-2565

N/S Street : Route 18
E/W Street : Jessica Lane
City/State : Weymouth, MA
Weather : Clear

File Name : 84280001
Site Code : 84280001
Start Date : 5/5/2022
Page No : 12

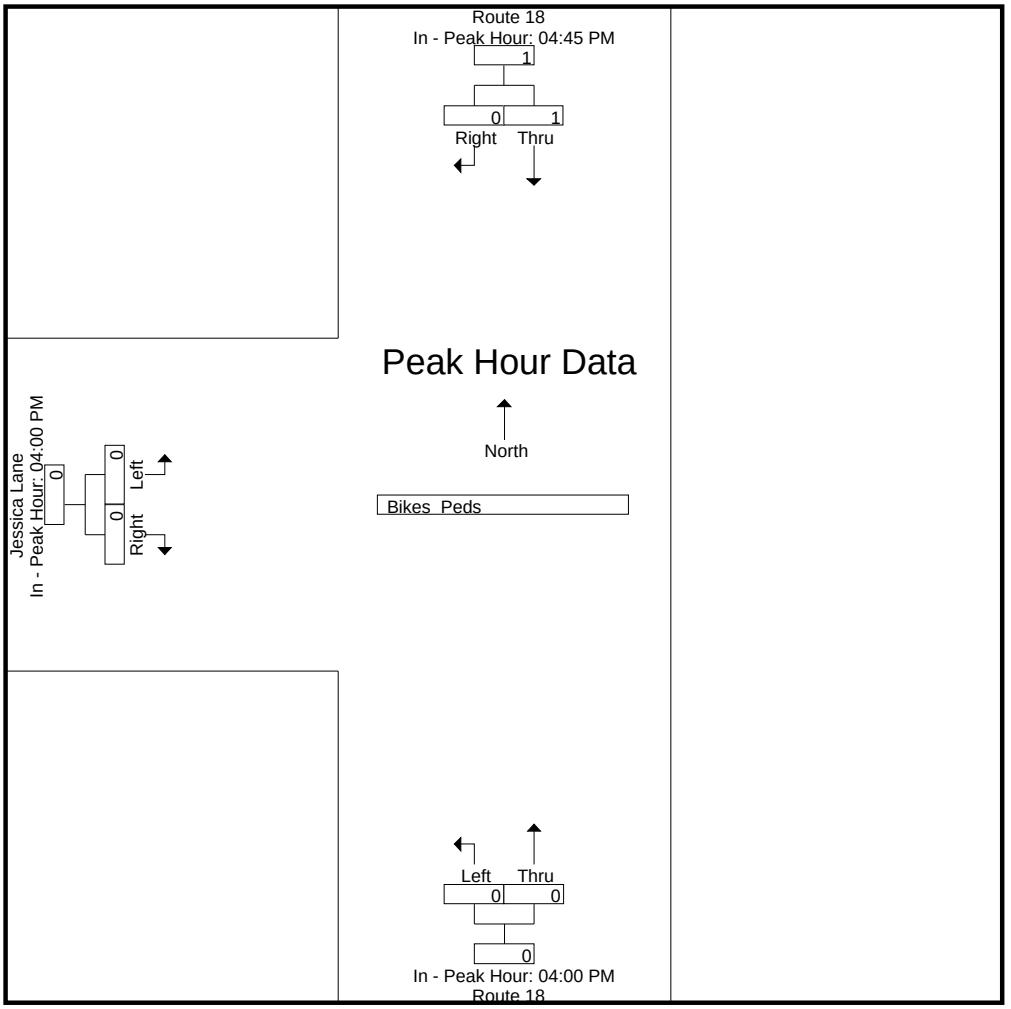

Accurate Counts

978-664-2565

N/S Street : Route 18
E/W Street : Jessica Lane
City/State : Weymouth, MA
Weather : Cloudy

File Name : 842800S1
Site Code : 84280001
Start Date : 5/7/2022
Page No : 1

Groups Printed- Cars - Trucks

	Route 18 From North		Route 18 From South		Jessica Lane From West		
Start Time	Thru	Right	Left	Thru	Left	Right	Int. Total
11:00 AM	223	1	0	181	2	1	408
11:15 AM	226	1	0	203	3	0	433
11:30 AM	200	2	0	214	1	1	418
11:45 AM	247	0	0	224	0	0	471
Total	896	4	0	822	6	2	1730
12:00 PM	231	0	0	193	0	0	424
12:15 PM	244	1	0	219	0	0	464
12:30 PM	208	0	1	223	0	1	433
12:45 PM	241	0	0	231	1	0	473
Total	924	1	1	866	1	1	1794
01:00 PM	221	1	0	206	1	0	429
01:15 PM	219	0	0	207	0	0	426
01:30 PM	192	0	0	212	1	0	405
01:45 PM	234	1	0	204	1	0	440
Total	866	2	0	829	3	0	1700
Grand Total	2686	7	1	2517	10	3	5224
Apprch %	99.7	0.3	0	100	76.9	23.1	
Total %	51.4	0.1	0	48.2	0.2	0.1	
Cars	2674	7	1	2506	10	3	5201
% Cars	99.6	100	100	99.6	100	100	99.6
Trucks	12	0	0	11	0	0	23
% Trucks	0.4	0	0	0.4	0	0	0.4

	Route 18 From North			Route 18 From South			Jessica Lane From West			
Start Time	Thru	Right	App. Total	Left	Thru	App. Total	Left	Right	App. Total	Int. Total
Peak Hour Analysis From 11:00 AM to 01:45 PM - Peak 1 of 1										
Peak Hour for Entire Intersection Begins at 12:15 PM										
12:15 PM	**244**	**1**	**245**	0	219	219	0	0	0	464
12:30 PM	208	0	208	**1**	223	224	0	**1**	**1**	433
12:45 PM	241	0	241	0	**231**	**231**	**1**	0	1	**473**
01:00 PM	221	1	222	0	206	206	1	0	1	429
Total Volume	914	2	916	1	879	880	2	1	3	1799
% App. Total	99.8	0.2		0.1	99.9		66.7	33.3		
PHF	.936	.500	.935	.250	.951	.952	.500	.250	.750	.951
Cars	909	2	911	1	873	874	2	1	3	1788
% Cars	99.5	100	99.5	100	99.3	99.3	100	100	100	99.4
Trucks	5	0	5	0	6	6	0	0	0	11
% Trucks	0.5	0	0.5	0	0.7	0.7	0	0	0	0.6

Accurate Counts

978-664-2565

N/S Street : Route 18
E/W Street : Jessica Lane
City/State : Weymouth, MA
Weather : Cloudy

File Name : 842800S1
Site Code : 84280001
Start Date : 5/7/2022
Page No : 2

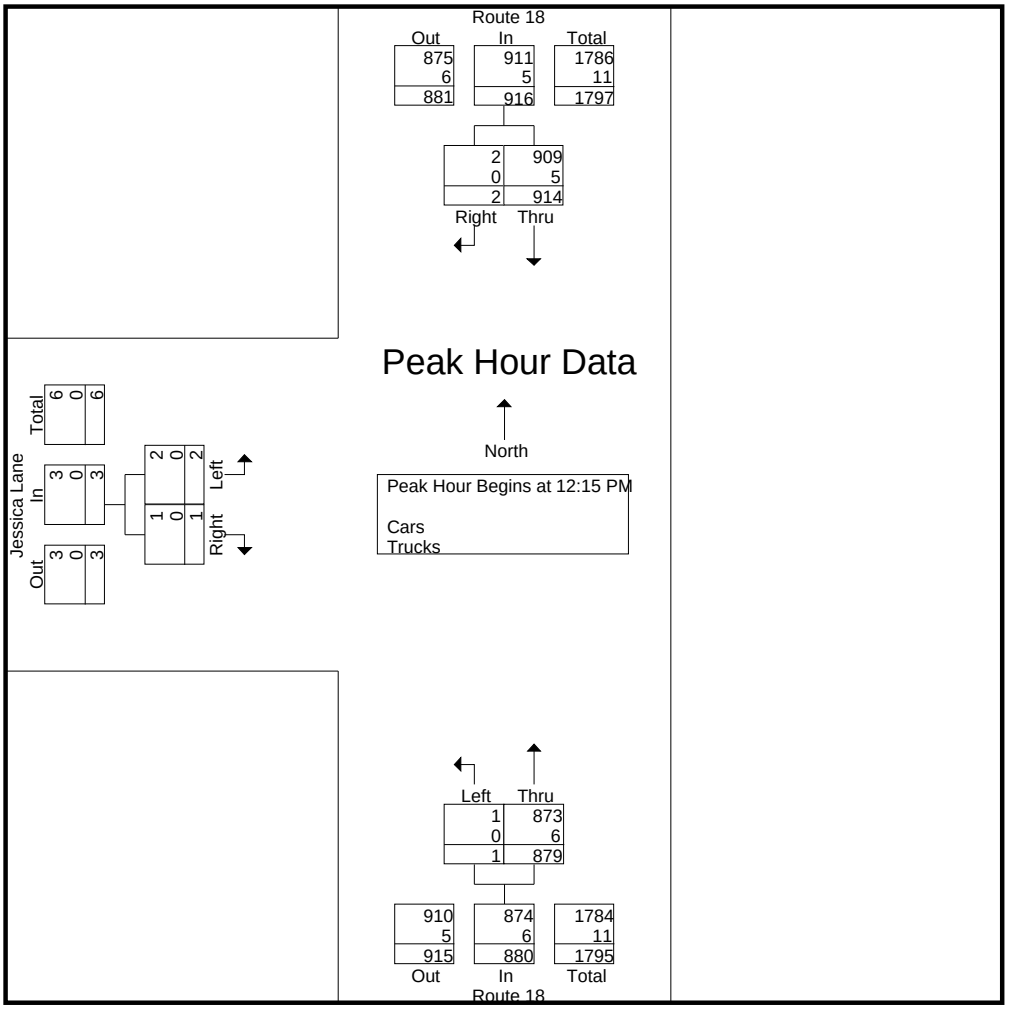

Peak Hour Analysis From 11:00 AM to 01:45 PM - Peak 1 of 1

Peak Hour for Each Approach Begins at:

	11:45 AM			12:15 PM			11:00 AM		
+0 mins.	**247**	0	**247**	0	219	219	2	**1**	**3**
+15 mins.	231	0	231	**1**	223	224	**3**	0	3
+30 mins.	244	**1**	245	0	**231**	**231**	1	1	2
+45 mins.	208	0	208	0	206	206	0	0	0
Total Volume	930	1	931	1	879	880	6	2	8
% App. Total	99.9	0.1		0.1	99.9		75	25	
PHF	.941	.250	.942	.250	.951	.952	.500	.500	.667
Cars	924	1	925	1	873	874	6	2	8
% Cars	99.4	100	99.4	100	99.3	99.3	100	100	100
Trucks	6	0	6	0	6	6	0	0	0
% Trucks	0.6	0	0.6	0	0.7	0.7	0	0	0

Accurate Counts

978-664-2565

N/S Street : Route 18
E/W Street : Jessica Lane
City/State : Weymouth, MA
Weather : Cloudy

File Name : 842800S1
Site Code : 84280001
Start Date : 5/7/2022
Page No : 3

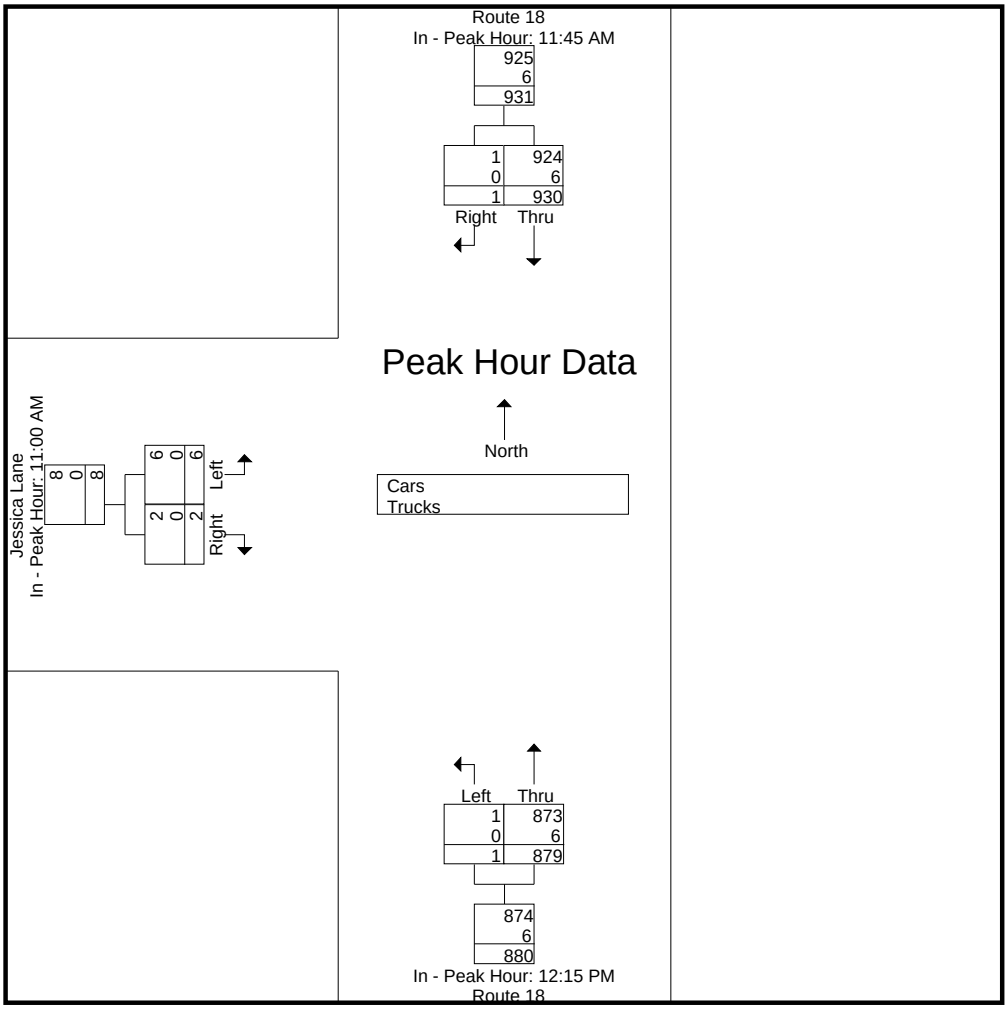

Accurate Counts

978-664-2565

N/S Street : Route 18
E/W Street : Jessica Lane
City/State : Weymouth, MA
Weather : Cloudy

File Name : 842800S1
Site Code : 84280001
Start Date : 5/7/2022
Page No : 4

Groups Printed- Cars

	Route 18 From North		Route 18 From South		Jessica Lane From West		
Start Time	Thru	Right	Left	Thru	Left	Right	Int. Total
11:00 AM	220	1	0	181	2	1	405
11:15 AM	224	1	0	201	3	0	429
11:30 AM	200	2	0	212	1	1	416
11:45 AM	247	0	0	224	0	0	471
Total	891	4	0	818	6	2	1721
12:00 PM	229	0	0	193	0	0	422
12:15 PM	241	1	0	218	0	0	460
12:30 PM	207	0	1	223	0	1	432
12:45 PM	240	0	0	229	1	0	470
Total	917	1	1	863	1	1	1784
01:00 PM	221	1	0	203	1	0	426
01:15 PM	219	0	0	206	0	0	425
01:30 PM	192	0	0	212	1	0	405
01:45 PM	234	1	0	204	1	0	440
Total	866	2	0	825	3	0	1696
Grand Total	2674	7	1	2506	10	3	5201
Apprch %	99.7	0.3	0	100	76.9	23.1	
Total %	51.4	0.1	0	48.2	0.2	0.1	

	Route 18 From North			Route 18 From South			Jessica Lane From West			
Start Time	Thru	Right	App. Total	Left	Thru	App. Total	Left	Right	App. Total	Int. Total
Peak Hour Analysis From 11:00 AM to 01:45 PM - Peak 1 of 1										
Peak Hour for Entire Intersection Begins at 12:15 PM										
12:15 PM	**241**	**1**	**242**	0	218	218	0	0	0	460
12:30 PM	207	0	207	**1**	223	224	0	**1**	**1**	432
12:45 PM	240	0	240	0	**229**	**229**	**1**	0	1	**470**
01:00 PM	221	1	222	0	203	203	1	0	1	426
Total Volume	909	2	911	1	873	874	2	1	3	1788
% App. Total	99.8	0.2		0.1	99.9		66.7	33.3		
PHF	.943	.500	.941	.250	.953	.954	.500	.250	.750	.951

Accurate Counts

978-664-2565

N/S Street : Route 18
E/W Street : Jessica Lane
City/State : Weymouth, MA
Weather : Cloudy

File Name : 842800S1
Site Code : 84280001
Start Date : 5/7/2022
Page No : 5

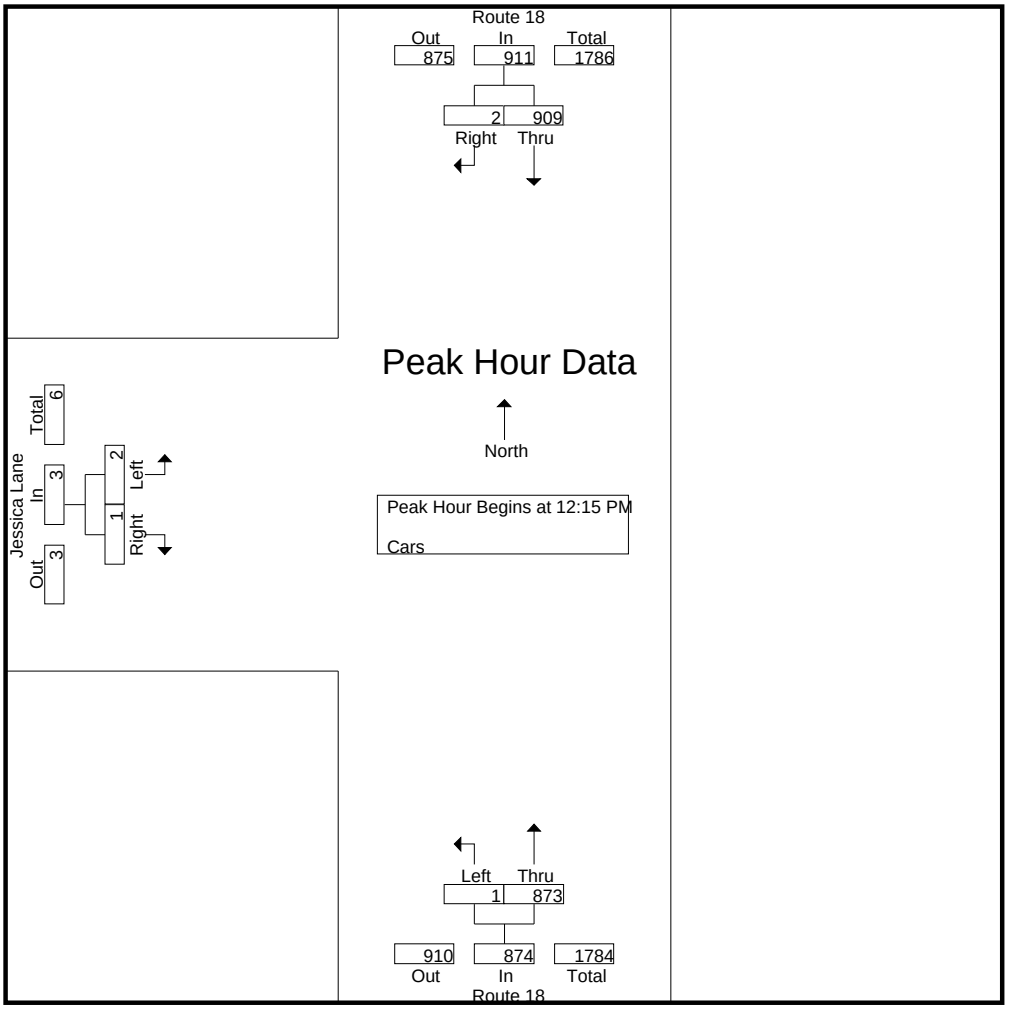

Peak Hour Analysis From 11:00 AM to 01:45 PM - Peak 1 of 1

Peak Hour for Each Approach Begins at:

	11:45 AM			12:15 PM			11:00 AM		
+0 mins.	**247**	0	**247**	0	218	218	2	**1**	**3**
+15 mins.	229	0	229	**1**	223	224	**3**	0	3
+30 mins.	241	**1**	242	0	**229**	**229**	1	1	2
+45 mins.	207	0	207	0	203	203	0	0	0
Total Volume	924	1	925	1	873	874	6	2	8
% App. Total	99.9	0.1		0.1	99.9		75	25	
PHF	.935	.250	.936	.250	.953	.954	.500	.500	.667

Accurate Counts
978-664-2565

N/S Street : Route 18
E/W Street : Jessica Lane
City/State : Weymouth, MA
Weather : Cloudy

File Name : 842800S1
Site Code : 84280001
Start Date : 5/7/2022
Page No : 6

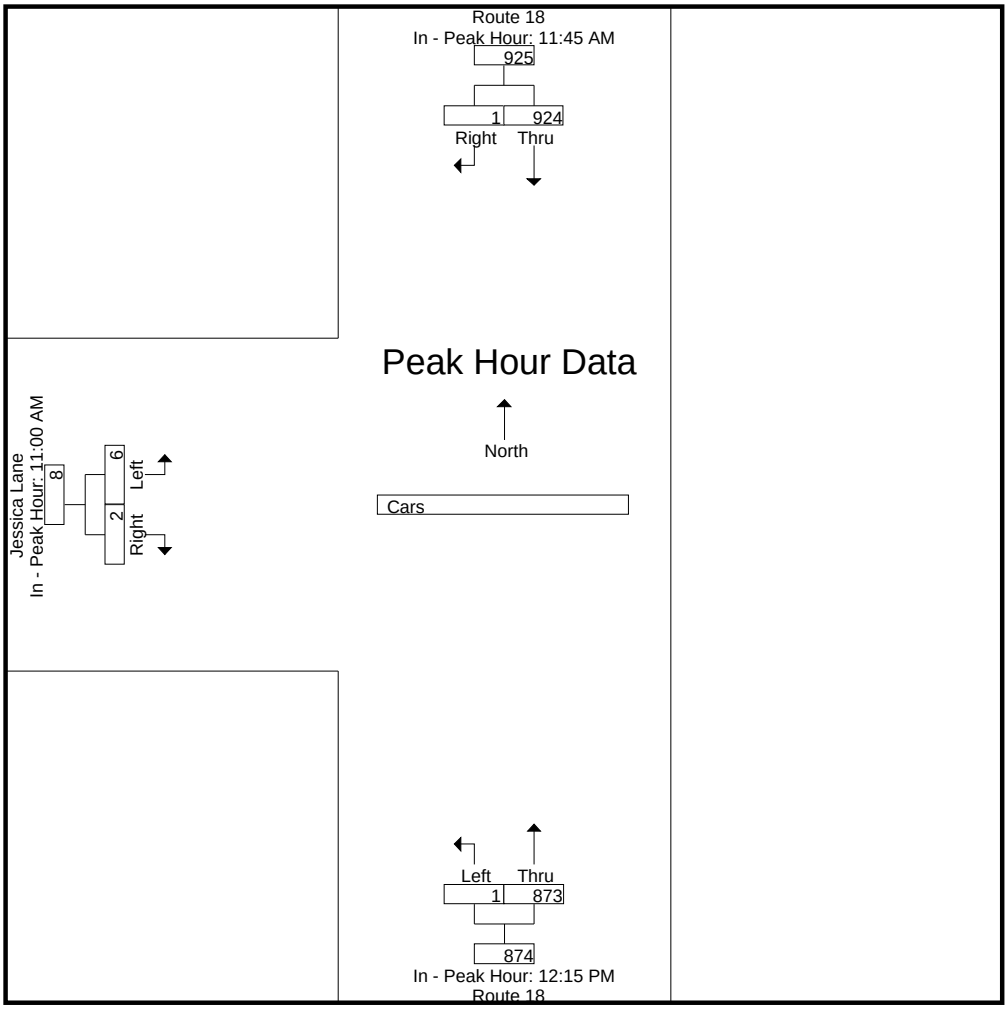

Accurate Counts

978-664-2565

N/S Street : Route 18
E/W Street : Jessica Lane
City/State : Weymouth, MA
Weather : Cloudy

File Name : 842800S1
Site Code : 84280001
Start Date : 5/7/2022
Page No : 7

Groups Printed- Trucks

	Route 18 From North		Route 18 From South		Jessica Lane From West		
Start Time	Thru	Right	Left	Thru	Left	Right	Int. Total
11:00 AM	3	0	0	0	0	0	3
11:15 AM	2	0	0	2	0	0	4
11:30 AM	0	0	0	2	0	0	2
11:45 AM	0	0	0	0	0	0	0
Total	5	0	0	4	0	0	9
12:00 PM	2	0	0	0	0	0	2
12:15 PM	3	0	0	1	0	0	4
12:30 PM	1	0	0	0	0	0	1
12:45 PM	1	0	0	2	0	0	3
Total	7	0	0	3	0	0	10
01:00 PM	0	0	0	3	0	0	3
01:15 PM	0	0	0	1	0	0	1
01:30 PM	0	0	0	0	0	0	0
01:45 PM	0	0	0	0	0	0	0
Total	0	0	0	4	0	0	4
Grand Total	12	0	0	11	0	0	23
Apprch %	100	0	0	100	0	0	
Total %	52.2	0	0	47.8	0	0	

	Route 18 From North			Route 18 From South			Jessica Lane From West			
Start Time	Thru	Right	App. Total	Left	Thru	App. Total	Left	Right	App. Total	Int. Total
Peak Hour Analysis From 11:00 AM to 01:45 PM - Peak 1 of 1										
Peak Hour for Entire Intersection Begins at 12:15 PM										
12:15 PM	**3**	0	**3**	0	1	1	0	0	0	**4**
12:30 PM	1	0	1	0	0	0	0	0	0	1
12:45 PM	1	0	1	0	2	2	0	0	0	3
01:00 PM	0	0	0	0	**3**	**3**	0	0	0	3
Total Volume	5	0	5	0	6	6	0	0	0	11
% App. Total	100	0		0	100		0	0		
PHF	.417	.000	.417	.000	.500	.500	.000	.000	.000	.688

Accurate Counts

978-664-2565

N/S Street : Route 18
E/W Street : Jessica Lane
City/State : Weymouth, MA
Weather : Cloudy

File Name : 842800S1
Site Code : 84280001
Start Date : 5/7/2022
Page No : 8

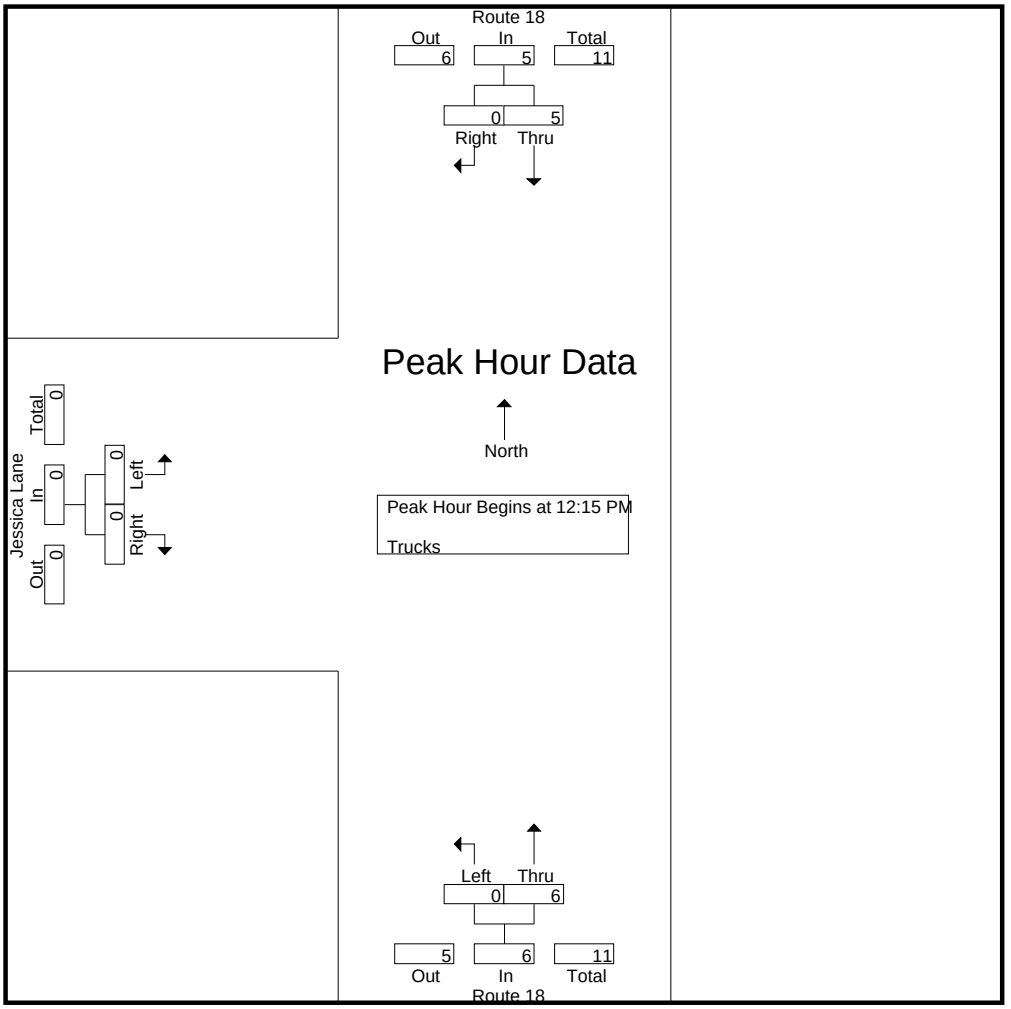

Peak Hour Analysis From 11:00 AM to 01:45 PM - Peak 1 of 1

Peak Hour for Each Approach Begins at:

	12:00 PM			12:15 PM			11:00 AM		
+0 mins.	2	0	2	0	1	1	0	0	0
+15 mins.	**3**	0	**3**	0	0	0	0	0	0
+30 mins.	1	0	1	0	2	2	0	0	0
+45 mins.	1	0	1	0	**3**	**3**	0	0	0
Total Volume	7	0	7	0	6	6	0	0	0
% App. Total	100	0		0	100		0	0	
PHF	.583	.000	.583	.000	.500	.500	.000	.000	.000

Accurate Counts

978-664-2565

N/S Street : Route 18
E/W Street : Jessica Lane
City/State : Weymouth, MA
Weather : Cloudy

File Name : 842800S1
Site Code : 84280001
Start Date : 5/7/2022
Page No : 9

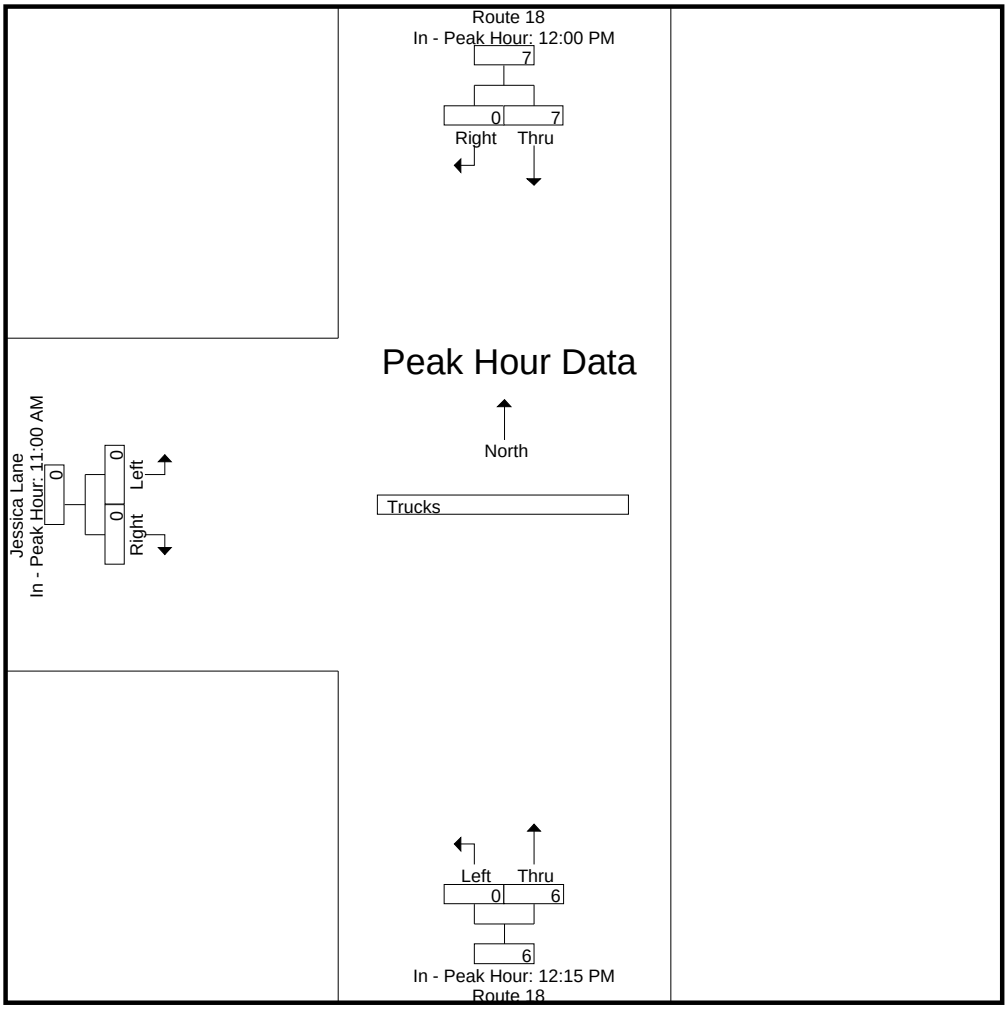

Accurate Counts

978-664-2565

N/S Street : Route 18
E/W Street : Jessica Lane
City/State : Weymouth, MA
Weather : Cloudy

File Name : 842800S1
Site Code : 84280001
Start Date : 5/7/2022
Page No : 10

Groups Printed- Bikes Peds

	Route 18 From North			Route 18 From South			Jessica Lane From West					
Start Time	Thru	Right	Peds	Left	Thru	Peds	Left	Right	Peds	Exclu. Total	Inclu. Total	Int. Total
11:00 AM	0	0	0	0	1	0	0	0	0	0	1	1
11:15 AM	0	0	0	0	1	0	0	0	0	0	1	1
11:30 AM	0	0	0	0	0	0	1	0	0	0	1	1
11:45 AM	1	0	0	0	0	0	0	0	0	0	1	1
Total	1	0	0	0	2	0	1	0	0	0	4	4
12:00 PM	0	0	0	0	0	0	0	0	0	0	0	0
12:15 PM	0	0	0	0	0	0	0	0	0	0	0	0
12:30 PM	0	0	0	0	1	0	0	0	0	0	1	1
12:45 PM	0	0	0	0	0	0	0	0	0	0	0	0
Total	0	0	0	0	1	0	0	0	0	0	1	1
01:00 PM	0	0	0	0	0	0	0	0	0	0	0	0
01:15 PM	0	0	0	0	0	0	0	0	0	0	0	0
01:30 PM	0	0	0	0	0	0	0	0	0	0	0	0
01:45 PM	0	0	0	0	0	0	0	0	0	0	0	0
Total	0	0	0	0	0	0	0	0	0	0	0	0
Grand Total	1	0	0	0	3	0	1	0	0	0	5	5
Apprch %	100	0		0	100		100	0				
Total %	20	0		0	60		20	0		0	100	

	Route 18 From North			Route 18 From South			Jessica Lane From West			
Start Time	Thru	Right	App. Total	Left	Thru	App. Total	Left	Right	App. Total	Int. Total
Peak Hour Analysis From 11:00 AM to 01:45 PM - Peak 1 of 1										
Peak Hour for Entire Intersection Begins at 11:00 AM										
11:00 AM	0	0	0	0	**1**	**1**	0	0	0	**1**
11:15 AM	0	0	0	0	1	1	0	0	0	1
11:30 AM	0	0	0	0	0	0	**1**	0	**1**	1
11:45 AM	**1**	0	**1**	0	0	0	0	0	0	1
Total Volume	1	0	1	0	2	2	1	0	1	4
% App. Total	100	0		0	100		100	0		
PHF	.250	.000	.250	.000	.500	.500	.250	.000	.250	1.00

Accurate Counts

978-664-2565

N/S Street : Route 18
E/W Street : Jessica Lane
City/State : Weymouth, MA
Weather : Cloudy

File Name : 842800S1
Site Code : 84280001
Start Date : 5/7/2022
Page No : 11

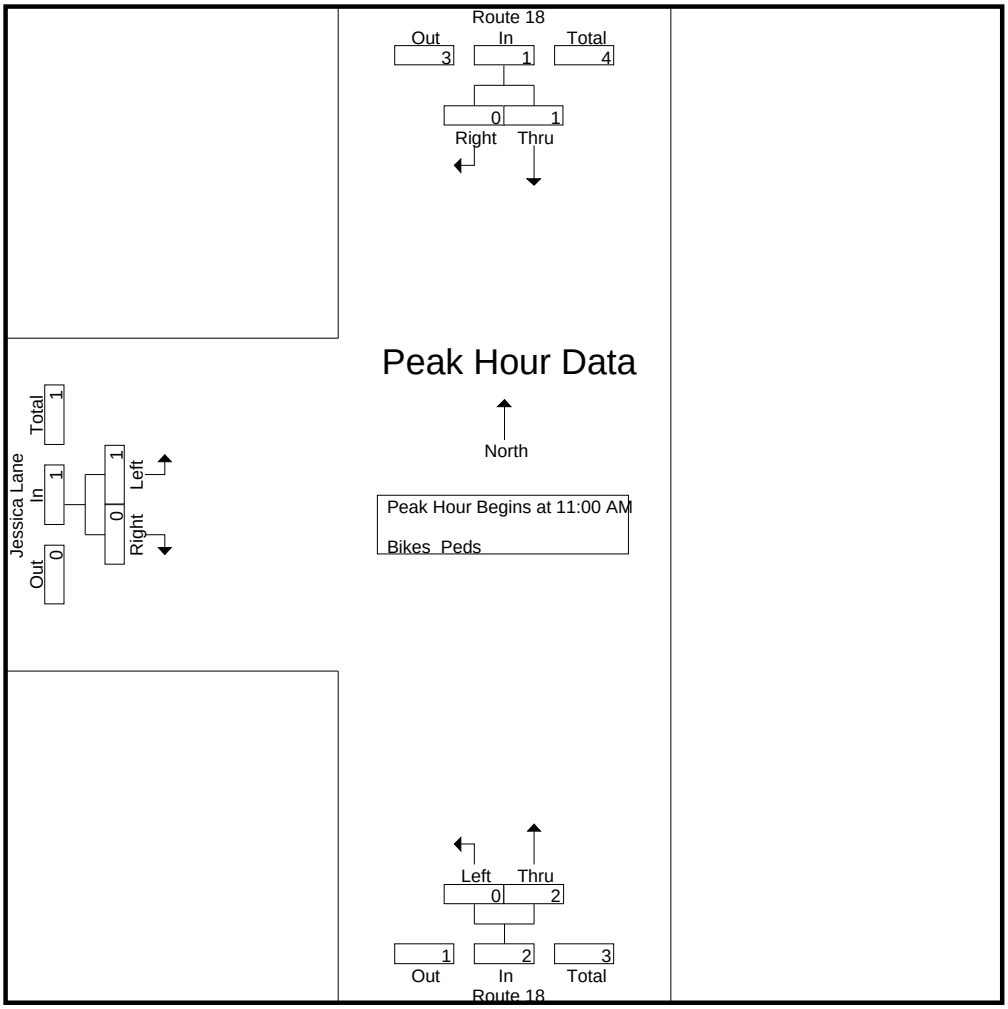

Peak Hour Analysis From 11:00 AM to 01:45 PM - Peak 1 of 1

Peak Hour for Each Approach Begins at:

	11:00 AM			11:00 AM			11:00 AM		
+0 mins.	0	0	0	0	**1**	**1**	0	0	0
+15 mins.	0	0	0	0	1	1	0	0	0
+30 mins.	0	0	0	0	0	0	**1**	0	**1**
+45 mins.	**1**	0	**1**	0	0	0	0	0	0
Total Volume	1	0	1	0	2	2	1	0	1
% App. Total	100	0		0	100		100	0	
PHF	.250	.000	.250	.000	.500	.500	.250	.000	.250

Accurate Counts

978-664-2565

N/S Street : Route 18
E/W Street : Jessica Lane
City/State : Weymouth, MA
Weather : Cloudy

File Name : 842800S1
Site Code : 84280001
Start Date : 5/7/2022
Page No : 12

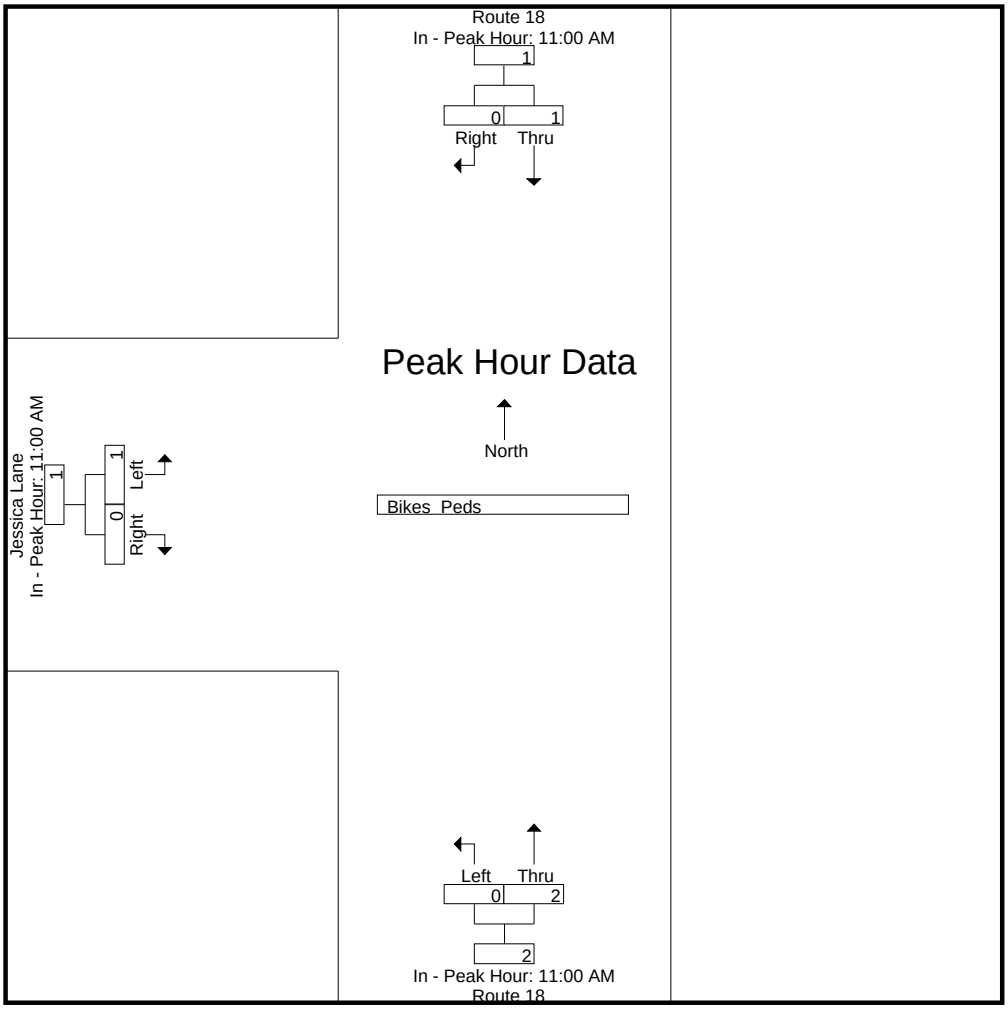

SEASONAL ADJUSTMENT DATA

Massachusetts Highway Department

6255: Monthly Hourly Volume for May 2018

Location ID:	**6255**	**Seasonal Factor Group:**	**UR2**
County:	**Norfolk**	**Daily Factor Group:**	
Functional Class	**2**	**Axle Factor Group:**	**UR2**
Location:	**PILGRIM HIGHWAY**	**Growth Factor Group:**	

	0:00	1:00	2:00	3:00	4:00	5:00	6:00	7:00	8:00	9:00	10:00	11:00	12:00	13:00	14:00	15:00	16:00	17:00	18:00	19:00	20:00	21:00	22:00	23:00	TOTAL	QC Status
1	1088	708	512	666	2139	6804	8424	7625	8161	7956	7650	7627	7621	8053	8961	8905	8797	9041	8020	6648	5354	4087	2882	2040	139769	Accepted
2	1270	664	450	661	2092	6811	8298	8477	8684	8074	8225	8163	7900	8147	9063	9534	9438	9341	8370	6966	5346	4263	3426	2327	145990	Accepted
3	1220	770	535	753	2143	6640	8344	8727	8285	8175	7806	7951	8047	8177	9194	9016	9117	9125	7957	7243	5616	4542	3255	2266	144904	Accepted
4	1550	869	535	798	1974	6114	7876	8538	8428	8116	8034	8377	8294	8701	8787	9236	9299	9445	8506	6657	5311	4502	4050	3137	147134	Accepted
5	1745	1172	690	615	960	2253	4086	6237	7562	8130	8882	9146	8985	8769	9194	8953	8944	8554	7199	5839	5782	4962	4401	3117	136177	Accepted
6	1978	1185	864	655	616	1201	2459	3877	4934	6623	7928	9197	9300	9157	9344	8896	8739	7744	6877	5796	4508	3347	2311	1521	119057	Accepted
7																										
8	958	624	475	674	2206	6535	8493	8505	8370	8193	7691	7748	7810	8188	8847	9248	8956	9073	7990	6860	5404	4118	2906	1958	141830	Accepted
9	1155	714	497	707	2144	6082	8086	8424	8640	8008	7936	7968	8115	8458	8995	9186	9225	8865	8175	7128	5695	4273	3114	2450	144040	Accepted
10	1418	784	611	762	2144	6584	8307	9047	8587	8456	8132	8650	8164	8688	9175	9176	9516	8998	8166	7463	5854	4852	3498	2266	149298	Accepted
11	1443	960	672	765	1988	6165	7804	8618	8586	8399	8432	8575	8524	8609	8570	9023	9014	9058	8508	7077	5734	4927	3940	3059	148450	Accepted
12	1843	1129	805	683	1014	2182	3583	5050	6487	7654	8722	9036	8153	7668	7044	8016	8213	8027	7511	6162	5250	4580	4121	3028	125961	Accepted
13	1709	1060	673	567	683	1370	2781	4064	5098	6803	8546	9277	9498	8967	8931	8719	8814	8239	8035	7167	6004	4379	2609	1594	125587	Accepted
14	964	602	478	742	2211	6718	8173	8757	8677	7758	7955	8014	8033	7975	8799	9010	8631	8896	7919	6814	5076	3816	2970	2060	141048	Accepted
15	1195	717	487	704	2191	6946	8295	8819	8506	7940	7850	8141	7906	8351	8923	9179	9462	9342	7157	6148	4731	3512	2717	2536	141755	Accepted
16	1475	777	562	741	2179	6815	8587	9097	8513	8218	7862	8103	7085	8452	9193	9203	8828	9321	8319	6888	5563	4374	3215	2396	145766	Accepted
17	1454	761	612	726	2167	6781	8078	8890	8790	8473	8262	8601	8389	8571	9088	9395	9202	9698	8353	6912	6013	4732	3684	2722	150354	Accepted
18	1715	963	722	822	2041	6180	7826	8892	8186	8481	8610	8810	8903	8850	8766	8963	8558	8578	8279	6960	5481	4608	3938	3286	148418	Accepted
19	2019	1251	883	757	1035	2252	3816	5372	6565	7307	8476	9040	8991	7438	5491	8453	8360	7756	7573	6006	5137	4373	4098	3264	125713	Accepted
20	1740	1115	696	561	796	1579	3098	4513	5685	7068	8477	9102	9225	9026	9091	8776	8109	8311	7557	6094	4957	3772	2636	1727	123711	Accepted
21	1057	583	445	656	2272	6768	8180	8466	8235	8352	7151	7609	7509	8003	8484	8921	9067	8914	7986	6970	5289	3855	2743	1942	139457	Accepted
22	1006	492	437	614	2159	6745	8467	8848	8626	8395	7957	8122	7963	8132	8659	8792	8877	9125	7683	6741	5367	4119	2895	1951	142172	Accepted
23	1413	748	577	750	2161	6744	8566	8785	8535	8255	8333	8465	8204	8634	9204	8920	9265	9378	8545	7506	5871	4511	3260	2517	149147	Accepted
24	1505	796	618	832	2213	6833	8017	8821	8888	8698	8668	8650	8767	8505	8971	8802	8715	9191	8154	7630	6201	5056	4093	2714	151338	Accepted
25	1686	999	691	841	2020	5838	7579	8694	8688	8558	8410	8455	8297	8296	7959	8542	8476	8188	7071	6854	6050	4910	3950	3443	144495	Accepted
26	1951	1220	764	677	973	1838	3997	5284	6548	7399	8000	8153	8501	8234	8371	8212	7738	7714	7137	6167	5659	4796	3805	2883	126021	Accepted
27	1943	1130	696	546	605	1250	2326	3166	4295	5854	7225	8728	9279	8661	8494	8346	7893	7592	6750	5734	4694	3449	2762	3003	114421	Accepted
28	1707	836	485	506	813	1545	3082	4181	4884	6475	7512	8323	8164	8199	8131	7488	7359	7185	6438	5682	4887	3791	2695	1750	112118	Accepted
29	1015	577	458	734	2318	6625	8251	8284	7814	8188	8097	8194	8255	8532	9098	9238	9241	8272	8009	5666	5860	4232	3090	2260	142308	Accepted
30	1165	661	517	732	2122	6579	8343	8334	8410	8462	8326	8277	8131	8408	8936	8845	8612	9092	8108	7356	5760	4473	3242	2130	145021	Accepted
31	1286	779	562	760	2114	6704	8257	8434	8214	8036	8417	8822	8643	8543	8963	8897	8860	9074	8096	7308	6015	4797	3454	2437	147472	Accepted

138631.1	May 2018 ADT
133238	2018 AADT
0.038902	

Massachusetts Highway Department

6255: Monthly Hourly Volume for November 2018

Location ID:	**6255**	**Seasonal Factor Group:**	**UR2**
County:	**Norfolk**	**Daily Factor Group:**	
Functional Class	**2**	**Axle Factor Group:**	**UR2**
Location:	**PILGRIM HIGHWAY**	**Growth Factor Group:**	

	0:00	1:00	2:00	3:00	4:00	5:00	6:00	7:00	8:00	9:00	10:00	11:00	12:00	13:00	14:00	15:00	16:00	17:00	18:00	19:00	20:00	21:00	22:00	23:00	TOTAL	QC Status
1	1082	644	515	761	2304	6655	8020	8439	8567	7985	7786	7768	7663	8125	8743	9154	8940	9000	8263	6649	5057	4160	3215	2445	141940	Accepted
2	1351	890	551	761	2070	6117	7511	6586	8305	7810	7638	7609	8035	7980	8381	8344	8810	8797	7997	6328	4747	4208	3440	2556	136822	Accepted
3	1760	1066	749	620	995	2062	3110	4346	5723	6577	7784	8175	8707	8515	8721	8619	8494	7981	7410	5814	4905	4193	3931	3072	123329	Accepted
4	2180	1342	814	512	430	632	1292	2716	3762	5019	7004	8135	8573	9159	8564	8553	8425	8444	7921	6714	5347	3851	2754	2159	114302	Accepted
5	1707	1663	888	500	729	2309	6731	7890	8250	8432	7795	7341	7320	7379	7633	8608	8518	8520	8566	7257	5834	4427	3272	2727	134296	Accepted
6	1858	1023	525	453	661	2155	6343	7358	7740	8026	7763	7004	7570	7666	7849	8184	8128	8188	8203	7311	6118	4557	3503	2587	130773	Accepted
7	2069	1507	647	434	657	2220	6497	7711	7950	8549	8083	7527	7664	7477	8037	8487	8324	8566	8834	7590	6425	5256	3646	2847	137004	Accepted
8	2209	1166	536	459	777	2292	6703	7939	8612	8343	8090	7520	7672	7676	8073	8503	8559	8649	8958	7602	6387	5017	4229	3155	139126	Accepted
9	2469	1307	746	523	816	2156	6320	8019	8652	8422	8041	7809	8013	8333	8496	8846	8843	8478	8267	6933	6271	4744	4012	3327	139843	Accepted
10	2646	1819	1030	768	746	1137	2364	3626	5089	6615	7870	8243	8606	8969	8830	9002	8926	8734	8411	7001	5592	4616	4108	3973	128721	Accepted
11	3226	2251	1226	888	624	562	1111	2235	3301	4607	6288	7711	8708	8859	8366	7926	7578	8199	7771	6270	5006	4079	3035	2722	112549	Accepted
12	1795	1183	659	410	601	1545	4162	6404	7713	7956	7572	8005	7743	8726	8562	8614	9224	8695	8900	7239	5359	4145	3222	2461	130895	Accepted
13																										
14	1022	594	419	735	2333	6691	7920	8290	7943	8205	7619	7680	7661	8324	8695	8590	8589	8844	7802	6233	5237	4334	3196	2102	139058	Accepted
15	1268	693	539	798	2205	6615	8081	8474	8549	8223	7898	7903	7944	8253	8415	8688	8525	8761	7645	5870	4567	3702	2759	2268	138643	Accepted
16	1424	780	682	809	1956	5581	7171	8048	7669	7295	7148	7410	7671	7717	8227	8337	8643	8790	7536	5717	4580	3899	3728	3123	133941	Accepted
17	2120	1182	816	753	1112	2490	3872	5458	7016	7789	8693	9033	9071	8772	9303	9338	8890	8562	7537	5682	4697	4227	4350	2994	133757	Accepted
18	1885	1343	946	604	662	1187	2267	3503	4634	6259	7568	8666	8921	8759	8445	8591	8247	7370	6295	5357	3846	2963	2231	1540	112089	Accepted
19	916	572	447	673	2200	6282	7543	7781	8062	8117	7401	7718	7931	8102	8583	8674	8317	8622	7521	6421	4970	3616	2762	1905	135136	Accepted
20	1081	625	450	653	2085	6208	7414	7645	7584	7602	7837	7991	7848	8016	8107	7740	7949	8150	7611	6519	5350	4309	3457	2573	134804	Accepted
21	1584	913	604	805	1971	5916	7511	8180	7746	7724	8059	8653	8602	8188	7793	8108	7849	7453	6006	4721	4649	3740	3370	2572	132717	Accepted
22	1639	1080	724	637	579	825	1991	2469	3477	5034	7186	8349	8588	7760	6526	5187	5993	7393	8274	8024	8025	5384	3575	2412	111131	Accepted
23	1770	1163	1180	1248	1764	3459	4399	5341	6107	7110	8335	8636	8406	8472	8664	8413	8214	7943	6713	5600	4760	3976	3516	2816	128005	Accepted
24	1825	1160	753	733	889	1846	3072	4448	5652	7094	8250	8943	8878	8538	8332	8386	8369	8075	7051	5620	4924	4032	3614	2884	123368	Accepted
25	1804	1117	799	618	730	1244	2184	2845	3867	5681	6922	7656	8524	7700	7609	7186	7304	6753	6019	5038	3903	2790	2057	1410	101760	Accepted
26	867	486	392	686	2379	6626	7841	7828	7829	7573	7500	7379	7468	7422	8249	8303	8202	8183	6669	5701	4279	3109	2273	1656	128900	Accepted
27	982	538	442	695	2245	6254	7078	7511	6704	7982	7348	7547	7621	7718	8278	8063	8194	8789	7527	5834	4665	3729	2709	1820	130273	Accepted
28	1069	579	465	665	2203	6716	7793	8212	8464	7938	7671	7660	7552	7860	8429	8307	8390	8422	7634	6011	5015	3771	2889	1953	135668	Accepted
29	1212	601	473	713	2170	5885	7133	8215	8583	8162	7792	7799	8072	7838	8527	8671	8520	8897	7500	6323	5214	4294	3227	2491	138312	Accepted
30	1532	777	592	703	2107	6304	8006	8725	8458	7950	7905	8145	8232	8428	8549	8694	8887	8588	7569	6183	4829	4290	3894	3053	142400	Accepted

129984.9	November 2018 ADT
133238	2018 AADT
-0.02503	

COVID ADJUSTMENT DATA

2018 AADT from ATR, with 2.5% seasonal adjustment:

20,660 vehicles per day

2022 ADT from ATR, no seasonal adjustment:

20,569 vehicles per day

$$1 - \frac{20{,}660\ vpd}{20{,}569\ vpd} = -0.0044$$

PUBLIC TRANSPORTATION SCHEDULES

BRAINTREE – SOUTH STATION 2022 SPRING/SUMMER SCHEDULE

Effective May 23, 2022

This schedule displays all trains which make connecting stops between Braintree and South Station.
Please keep in mind that outbound trains will make regularly scheduled local stops en route to their final station stop.

Monday to Friday

Inbound to Boston

Zone	Train No.	AM																		PM																							
	Bikes Allowed	🚲	🚲	🚲	🚲	🚲	🚲	🚲	🚲	🚲	🚲	🚲	🚲	🚲	🚲	🚲	🚲	🚲	🚲	🚲	🚲	🚲	🚲	🚲	🚲	🚲	🚲	🚲	🚲	🚲	🚲	🚲	🚲	🚲	🚲	🚲	🚲	🚲	🚲	🚲	🚲	🚲	🚲
	Train comes from	MIDD	GREE	KING	MIDD	GREE	KING	MIDD	GREE	KING	MIDD	GREE	KING	MIDD	GREE	KING	MIDD	GREE	KING	MIDD	GREE	KING	MIDD	GREE	KING	MIDD	GREE	KING	MIDD	GREE	KING	MIDD	GREE	KING	MIDD	GREE	MIDD	KING	GREE	MIDD	KING	MIDD	MIDD	GREE
2	Braintree	♿	L 5:27	-	L 6:07	L 6:27	-	L 7:07	L 7:27	-	L 8:02	L 8:27	-	L 9:14	L 9:35	-	L 10:32	L 10:50	-	L 11:47	L 12:05	-	L 1:02	L 1:20	-	L 2:17	L 2:35	-	L 3:32	L 3:52	-	L 4:52	L 5:13	-	L 6:47	L 7:05	-	L 7:57	L 8:47	L 9:07	L 10:07	-
1	Quincy Center	♿	L 5:32	L 5:52	L 6:12	L 6:32	L 6:52	L 7:12	L 7:32	L 7:52	L 8:07	L 8:32	L 8:52	L 9:19	L 9:40	L 10:07	L 10:37	L 10:55	L 11:22	L 11:52	L 12:10	L 12:37	L 1:07	L 1:25	L 1:52	L 2:22	L 2:40	L 3:07	L 3:39	L 3:57	L 4:39	L 4:59	L 5:20	L 6:30	L 6:52	L 7:10	L 7:40	L 8:02	L 8:52	L 9:12	L 10:12	L 10:24
1A	JFK/UMass	♿	L 5:41	L 6:01	L 6:21	L 6:41	L 7:01	L 7:21	L 7:41	L 8:01	L 8:16	L 8:41	L 9:01	L 9:28	L 9:49	L 10:16	L 10:46	L 11:04	L 11:31	L 12:01	L 12:19	L 12:46	L 1:16	L 1:34	L 2:01	L 2:31	L 2:49	L 3:16	L 3:48	L 4:06	L 4:48	L 5:10	L 5:30	L 6:41	L 7:01	L 7:20	L 7:49	L 8:11	L 9:01	L 9:21	L 10:21	L 10:33
1A	South Station	♿	5:50	6:10	6:30	6:50	7:10	7:30	7:50	8:10	8:25	8:50	9:10	9:37	9:58	10:24	10:54	11:12	11:39	12:09	12:27	12:54	1:24	1:42	2:09	2:39	2:57	3:24	3:57	4:15	4:56	5:18	5:39	6:49	7:10	7:29	7:57	8:19	9:09	9:29	10:29	10:40

Monday to Friday

Outbound from Boston

Zone	Train No.	AM														PM																									
	Bikes Allowed	🚲	🚲	🚲	🚲	🚲	🚲	🚲	🚲	🚲	🚲	🚲	🚲	🚲	🚲	🚲	🚲	🚲	🚲	🚲	🚲	🚲	🚲	🚲	🚲	🚲	🚲	🚲	🚲	🚲	🚲	🚲	🚲	🚲	🚲	🚲	🚲	🚲	🚲	🚲	🚲	🚲
	Train continue to	MIDD	KING	GREE	MIDD	GREE	KING	MIDD	GREE	KING	MIDD	GREE	KING	MIDD	GREE	KING	MIDD	GREE	KING	MIDD	GREE	KING	MIDD	GREE	KING	MIDD	GREE	KING	MIDD	GREE	KING	MIDD	GREE	KING	MIDD	MIDD	GREE	KING	MIDD	GREE	MIDD
1A	South Station	♿	5:25	6:05	6:25	7:25	8:00	8:25	8:45	9:12	9:33	10:00	10:30	10:48	11:15	11:45	12:03	12:30	1:00	1:18	1:45	2:15	2:33	3:00	3:15	3:33	4:05	4:15	4:33	4:55	5:15	5:33	5:55	6:25	6:45	7:05	8:15	8:25	8:45	9:45	10:45	11:00
1A	JFK/UMass	♿	5:31	6:11	6:31	7:31	8:06	8:31	8:51	9:18	9:39	10:06	10:36	10:54	11:21	11:51	12:09	12:36	1:06	1:24	1:51	2:21	2:39	3:06	3:21	3:39	4:11	4:21	4:39	5:01	5:21	5:39	6:01	6:31	6:51	7:11	8:21	8:31	8:51	9:51	10:51	11:06
1	Quincy Center	♿	5:40	6:20	6:40	7:40	8:15	8:40	9:00	9:27	9:48	10:15	10:45	11:03	11:30	12:00	12:18	12:45	1:15	1:33	2:00	2:30	2:48	3:15	3:30	3:48	4:20	4:30	4:48	5:10	5:30	5:48	6:10	6:40	7:00	7:20	8:30	8:40	9:00	10:00	11:00	11:15
2	Braintree	♿	5:45	6:25	-	7:45	-	8:45	9:05	-	9:53	10:20	-	11:08	11:35	-	12:23	12:50	-	1:38	2:05	-	2:53	3:20	-	3:53	4:25	-	4:53	5:15	-	5:53	6:15	-	7:05	7:25	8:35	-	9:05	10:05	-	11:20

Weekend

Inbound to Boston

Zone		AM										PM															
	Saturday Train No.	1002	1040	1070	1042	1004	1072	1006	1044	1008	1074	1046	1010	1076	1048	1012	1078	1014	1050	1016	1080	1052	1082	1018	1054	1084	1020
	Sunday Train No.	2002	2040	2070	2042	2004	2072	2006	2044	2008	2074	2046	2010	2076	2048	2012	2078	2014	2050	2016	2080	2052	2082	2018	2054	2084	2020
	Bikes Allowed	🚲	🚲	🚲	🚲	🚲	🚲	🚲	🚲	🚲	🚲	🚲	🚲	🚲	🚲	🚲	🚲	🚲	🚲	🚲	🚲	🚲	🚲	🚲	🚲	🚲	🚲
	Train comes from	MIDD	KING	GREE	KING	MIDD	GREE	MIDD	KING	MIDD	GREE	KING	MIDD	GREE	KING	MIDD	GREE	MIDD	KING	MIDD	GREE	KING	GREE	MIDD	KING	GREE	MIDD
2	Braintree	♿	L 5:50	L 6:05	-	L 8:05	L 8:20	-	L 9:50	L 10:05	L 11:20	-	L 12:05	L 12:50	-	L 2:05	L 2:20	-	L 3:50	L 4:05	L 5:20	-	L 6:05	-	L 7:55	L 8:45	-	L 10:15
1	Quincy Center	♿	L 5:56	L 6:11	L 6:26	L 8:11	L 8:26	L 9:44	L 9:56	L 10:11	L 11:26	L 11:44	L 12:11	L 12:56	L 1:44	L 2:11	L 2:26	L 3:44	L 3:56	L 4:11	L 5:26	L 5:44	L 6:11	L 7:44	L 8:01	L 8:51	L 10:11	L 10:21
1A	JFK/UMass	♿	L 6:04	L 6:19	L 6:35	L 8:19	L 8:34	L 9:52	L 10:04	L 10:19	L 11:34	L 11:52	L 12:19	L 1:04	L 1:52	L 2:19	L 2:34	L 3:52	L 4:04	L 4:19	L 5:34	L 5:52	L 6:19	L 7:52	L 8:09	L 8:59	L 10:19	L 10:29
1A	South Station	♿	6:13	6:28	6:43	8:28	8:43	10:01	10:13	10:28	11:43	12:01	12:28	1:13	2:01	2:28	2:43	4:01	4:13	4:28	5:43	6:01	6:28	8:01	8:18	9:08	10:28	10:38

Weekend

Outbound from Boston

Zone		AM									PM																
	Saturday Train No.	1041	1003	1071	1043	1005	1073	1045	1007	1075	1009	1047	1077	1011	1049	1013	1079	1051	1015	1081	1017	1053	1083	1019	1055	1085	1021
	Sunday Train No.	2041	2003	2071	2043	2005	2073	2045	2007	2075	2009	2047	2077	2011	2049	2013	2079	2051	2015	2081	2017	2053	2083	2019	2055	2085	2021
	Bikes Allowed	🚲	🚲	🚲	🚲	🚲	🚲	🚲	🚲	🚲	🚲	🚲	🚲	🚲	🚲	🚲	🚲	🚲	🚲	🚲	🚲	🚲	🚲	🚲	🚲	🚲	🚲
	Train continue to	KING	MIDD	GREE	KING	MIDD	GREE	KING	MIDD	GREE	MIDD	KING	GREE	MIDD	KING	MIDD	GREE	KING	MIDD	GREE	MIDD	KING	GREE	MIDD	KING	GREE	MIDD
1A	South Station	♿	6:20	6:35	7:20	8:20	9:05	9:20	10:20	10:35	11:20	12:05	12:20	1:20	1:38	2:20	3:05	3:20	4:20	4:35	5:20	6:05	6:20	7:55	8:25	8:45	10:45	10:55
1A	JFK/UMass	♿	f 6:26	f 6:41	f 7:26	f 8:26	f 9:11	f 9:26	f 10:26	f 10:41	f 11:26	f 12:11	f 12:26	f 1:26	f 1:44	f 2:26	f 3:11	f 3:26	f 4:26	f 4:41	f 5:26	f 6:11	f 6:26	f 8:01	f 8:31	f 8:51	f 10:51	f 11:01
1	Quincy Cente	♿	f 6:33	f 6:48	f 7:33	f 8:33	f 9:18	f 9:33	f 10:33	f 10:48	f 11:33	f 12:18	f 12:33	f 1:33	f 1:51	f 2:33	f 3:18	f 3:33	f 4:33	f 4:48	f 5:33	f 6:18	f 6:33	f 8:08	f 8:38	f 8:58	f 10:58	f 11:08
2	Braintree	♿	6:40	6:55	-	8:40	9:25	-	10:40	10:55	-	12:25	12:40	-	1:58	2:40	3:25	-	4:40	4:55	-	6:25	6:40	-	8:45	9:05	-	11:15

Station of origin/destination	
MIDD	Middleborough
KING	Kingston
GREE	Greenbush

Times in purple with "f" indicate a flag stop: Passengers must tell the conductor that they wish to leave. Passengers waiting to board must be visible on the platform for the train to stop.

Times in blue indicate an early departure (L stop): The train may leave ahead of schedule at these stops.

Bikes: Bicycles are allowed on all trains unless the designated areas are too crowded.

High level platform and bridge plate available. Visit mbta.com/accessibility for more information.

Keep in Mind:

This schedule will be effective from May 23, 2022 and will replace the schedule of October 11, 2021.

Holiday Service
Memorial Day (May 30th), July 4th and Labor Day (September 5th) operate on a weekend schedule. Columbus Day (October 10th) and Juneteenth (observed on June 20th) operate on a regular weekday schedule.

For all holiday schedules, please check MBTA.com/holidays or call 617-222-3200.

KINGSTON LINE 2022 SPRING/SUMMER SCHEDULE

Effective May 23, 2022

Monday to Friday

Inbound to Boston

ZONE	STATION	TRAIN #	AM 040	042	044	046	048	050	PM 052	054	056	058	060	062	064
	Bikes Allowed														
8	Kingston		5:30	6:30	7:25	8:37	9:52	11:07	12:22	1:37	2:52	4:07	6:22	8:12	10:22
7	Halifax		5:39	6:39	7:34	8:46	10:01	11:16	12:31	1:46	3:01	4:17	6:37	8:21	10:31
6	Hanson		5:44	6:44	7:39	8:51	10:06	11:21	12:36	1:51	3:06	4:26	6:42	8:26	10:36
5	Whitman		5:50	6:50	7:45	8:57	10:16	11:31	12:46	2:01	3:16	4:31	6:47	8:31	10:41
4	Abington		5:54	6:54	7:49	9:01	10:20	11:35	12:50	2:05	3:20	4:35	6:51	8:35	10:45
3	South Weymouth		5:59	6:59	7:54	9:06	10:25	11:40	12:55	2:10	3:25	4:40	6:56	8:40	10:50
2	Braintree		L 6:07	L 7:07	L 8:02	L 9:14	L 10:32	L 11:47	L 1:02	L 2:17	L 3:32	L 4:52	L 7:05	L 8:47	10:58
1	Quincy Center		L 6:12	L 7:12	L 8:07	L 9:19	L 10:37	L 11:52	L 1:07	L 2:22	L 3:39	L 4:59	L 7:10	L 8:52	Connect to the Red Line for service to Boston
1A	JFK/UMass		L 6:21	L 7:21	L 8:16	L 9:28	L 10:46	L 12:01	L 1:16	L 2:31	L 3:48	L 5:10	L 7:20	L 9:01	
1A	South Station		6:30	7:30	8:25	9:37	10:54	12:09	1:24	2:39	3:57	5:18	7:29	9:09	

Monday to Friday

Outbound from Boston

ZONE	STATION	TRAIN #	AM 041	043	045	047	PM 049	051	053	055	057	059	061	063	Middleborough 031	065
	Bikes Allowed															
1A	South Station		6:05	8:25	9:33	10:48	12:03	1:18	2:33	3:33	4:33	5:33	6:45	8:45	11:00	Board Middleborough Train 031 and change trains at Braintree for a Kingston connection
1A	JFK/UMass		6:11	8:31	9:39	10:54	12:09	1:24	2:39	3:39	4:39	5:39	6:51	8:51	11:06	
1	Quincy Center		6:20	8:40	9:48	11:03	12:18	1:33	2:48	3:48	4:48	5:48	7:00	9:00	11:15	
2	Braintree		6:25	8:45	9:53	11:08	12:23	1:38	2:53	3:53	4:53	5:53	7:05	9:05	11:20 →	11:25
3	South Weymouth		6:32	8:52	10:00	11:15	12:30	1:45	3:00	4:00	5:00	6:00	7:12	9:12		11:32
4	Abington		6:37	9:07	10:05	11:20	12:35	1:50	3:05	4:05	5:05	6:05	7:17	9:17		11:37
5	Whitman		6:41	9:11	10:09	11:24	12:39	1:54	3:09	4:09	5:09	6:09	7:21	9:21		11:41
6	Hanson		6:50	9:17	10:15	11:30	12:45	2:00	3:15	4:15	5:15	6:15	7:27	9:26		11:46
7	Halifax		6:55	9:22	10:20	11:35	12:50	2:05	3:20	4:20	5:20	6:20	7:32	9:31		11:51
8	Kingston		7:09	9:34	10:32	11:47	1:02	2:17	3:33	4:33	5:33	6:33	7:45	9:44		12:04

Keep in Mind:

This schedule will be effective from May 23, 2022 and will replace the schedule of October 11, 2021.

Holiday Service
Memorial Day (May 30th), July 4th and Labor Day (September 5th) operate on a weekend schedule. Columbus Day (October 10th) and Juneteenth (observed on June 20th) operate on a regular weekday schedule.

For all holiday schedules, please check MBTA.com/holidays or call 617-222-3200.

Times in purple with "f" indicate a flag stop: Passengers must tell the conductor that they wish to leave. Passengers waiting to board must be visible on the platform for the train to stop.

Times in blue indicate an early departure (L stop): The train may leave ahead of schedule at these stops.

Bikes: Bicycles are allowed on all Kingston Line trains unless the designated areas are too crowded.

High level platform and bridge plate available. Visit mbta.com/accessibility for more information.

Connect to a different train for continued service outbound.

Weekend

Inbound to Boston

ZONE	STATION	SATURDAY TRAIN # / SUNDAY TRAIN #	AM 1040 / 2040	1042 / 2042	1044 / 2044	1046 / 2046	PM 1048 / 2048	1050 / 2050	1052 / 2052	1054 / 2054	1056 / 2056
	Bikes Allowed										
8	Kingston		5:30	7:30	9:30	11:30	1:30	3:30	5:30	8:10	10:10
7	Halifax		5:39	7:39	9:39	11:39	1:39	3:39	5:39	8:19	10:19
6	Hanson		5:44	7:44	9:44	11:44	1:44	3:44	5:44	8:24	10:24
5	Whitman		5:49	7:49	9:49	11:49	1:49	3:49	5:49	8:29	10:29
4	Abington		5:54	7:54	9:54	11:54	1:54	3:54	5:54	8:33	10:33
3	South Weymouth		5:58	7:58	9:58	11:58	1:58	3:58	5:58	8:38	10:38
2	Braintree		L 6:05	L 8:05	L 10:05	L 12:05	L 2:05	L 4:05	L 6:05	L 8:45	10:46
1	Quincy Center		L 6:11	L 8:11	L 10:11	L 12:11	L 2:11	L 4:11	L 6:11	L 8:51	Connect to the Red Line for service to Boston
1A	JFK/UMass		L 6:19	L 8:19	L 10:19	L 12:19	L 2:19	L 4:19	L 6:19	L 8:59	
1A	South Station		6:28	8:28	10:28	12:28	2:28	4:28	6:28	9:08	

Weekend

Outbound from Boston

ZONE	STATION	SATURDAY TRAIN # / SUNDAY TRAIN #	AM 1041 / 2041	1043 / 2043	1045 / 2045	PM 1047 / 2047	1049 / 2049	1051 / 2051	1053 / 2053	1055 / 2055	Middleborough 1021 / 2021	1057 / 2057
	Bikes Allowed											
1A	South Station		6:20	8:20	10:20	12:20	2:20	4:20	6:20	8:45	10:55	Board Middleborough Train 1021/2021 and change trains at Braintree for a Kingston connection
1A	JFK/UMass		f 6:26	f 8:26	f 10:26	f 12:26	f 2:26	f 4:26	f 6:26	f 8:51	f 11:01	
1	Quincy Center		f 6:33	f 8:33	f 10:33	f 12:33	f 2:33	f 4:33	f 6:33	f 8:58	f 11:08	
2	Braintree		6:40	8:40	10:40	12:40	2:40	4:40	6:40	9:05	11:15 →	11:20
3	South Weymouth		6:46	8:46	10:46	12:46	2:46	4:46	6:46	9:11	-	11:26
4	Abington		6:51	8:51	10:51	12:51	2:51	4:51	6:51	9:16	-	11:31
5	Whitman		6:55	8:55	10:55	12:55	2:55	4:55	6:55	9:20	-	11:35
6	Hanson		7:00	9:00	11:00	1:00	3:00	5:00	7:00	9:25	-	11:40
7	Halifax		7:05	9:05	11:05	1:05	3:05	5:05	7:05	9:30	-	11:45
8	Kingston		7:17	9:17	11:17	1:17	3:17	5:17	7:17	9:42	-	11:57

VEHICLE TRAVEL SPEED DATA

Accurate Counts
978-664-2565

Location : Main Street (Route 18)
Location : North of Jessica Lane
City/State: Weymouth, MA

8426SPD1

NB

Start Time	1 15	16 20	21 25	26 30	31 35	36 40	41 45	46 50	51 55	56 60	61 65	66 70	71 75	76 999	Total
11/21/19	1	1	24	39	10	0	0	0	0	0	0	0	0	0	75
01:00	2	0	15	15	3	0	0	0	0	0	0	0	0	0	35
02:00	3	1	3	8	2	0	0	0	0	0	0	0	0	0	17
03:00	4	6	10	8	0	0	0	0	0	0	0	0	0	0	28
04:00	7	4	11	19	4	1	1	0	0	0	0	0	0	0	47
05:00	0	0	4	9	27	54	11	7	0	0	0	0	0	0	112
06:00	12	7	15	31	92	80	33	4	1	0	0	0	0	0	275
07:00	1	5	53	168	157	120	21	0	1	0	0	0	0	0	526
08:00	3	6	18	105	148	110	39	6	1	1	0	0	0	0	437
09:00	3	4	37	98	170	94	26	4	1	0	0	0	0	0	437
10:00	32	104	75	81	59	29	16	1	3	0	0	0	0	0	400
11:00	2	6	53	121	149	125	28	4	1	0	0	0	0	0	489
12 PM	9	11	81	119	163	109	41	4	0	0	0	0	0	0	537
13:00	9	10	61	186	195	78	9	5	0	0	0	0	0	0	553
14:00	27	23	87	227	165	74	19	2	0	0	0	0	0	0	624
15:00	16	48	141	208	179	102	19	4	1	0	0	0	0	0	718
16:00	25	61	247	232	173	76	16	2	0	0	0	0	0	0	832
17:00	8	38	190	289	161	72	7	2	0	0	0	0	0	0	767
18:00	8	19	139	206	206	117	12	1	0	0	0	0	0	0	708
19:00	4	15	74	153	188	97	17	1	1	0	0	0	0	0	550
20:00	6	6	35	148	151	87	31	2	1	0	0	0	0	0	467
21:00	4	0	8	55	112	90	28	3	0	0	0	0	0	0	300
22:00	6	0	1	22	75	96	40	3	1	0	0	0	0	0	244
23:00	0	0	2	8	51	69	34	8	2	0	0	0	0	0	174
Total	192	375	1384	2555	2640	1680	448	63	14	1	0	0	0	0	9352

Daily

15th Percentile :	23 MPH
50th Percentile :	30 MPH
85th Percentile :	37 MPH
95th Percentile :	40 MPH
Mean Speed(Average) :	31 MPH
10 MPH Pace Speed :	26-35 MPH
Number in Pace :	5195
Percent in Pace :	55.5%
Number of Vehicles > 35 MPH :	2206
Percent of Vehicles > 35 MPH :	23.6%

Accurate Counts
978-664-2565

Location : Main Street (Route 18)
Location : North of Jessica Lane
City/State: Weymouth, MA

8426SPD1

NB

Start Time	1 15	16 20	21 25	26 30	31 35	36 40	41 45	46 50	51 55	56 60	61 65	66 70	71 75	76 999	Total
11/22/19	0	0	0	4	23	24	19	1	2	0	0	0	0	0	73
01:00	0	1	2	8	15	18	6	2	1	0	0	0	0	0	53
02:00	0	0	1	0	8	7	5	0	1	0	0	0	0	0	22
03:00	0	0	0	4	9	4	7	0	0	0	0	0	0	0	24
04:00	0	0	0	2	11	8	5	0	1	0	0	0	0	0	27
05:00	0	0	4	8	26	48	12	7	0	0	0	0	0	0	105
06:00	0	1	10	42	100	76	29	5	0	0	0	0	0	0	263
07:00	3	6	12	114	164	122	44	7	0	0	0	0	0	0	472
08:00	1	15	43	81	167	105	34	2	0	0	0	0	0	0	448
09:00	1	22	113	143	147	75	16	2	0	0	0	0	0	0	519
10:00	13	20	102	186	110	39	11	0	0	0	0	0	0	0	481
11:00	8	23	101	205	149	38	5	1	0	0	0	0	0	0	530
12 PM	17	36	138	230	138	47	9	2	0	0	0	0	0	0	617
13:00	2	11	99	249	166	95	20	2	0	0	0	0	0	0	644
14:00	17	48	115	211	165	92	15	2	0	0	0	0	0	0	665
15:00	12	56	208	262	188	51	15	2	0	0	0	0	0	0	794
16:00	5	28	243	298	157	68	18	0	0	0	0	0	0	0	817
17:00	9	50	245	289	181	38	8	2	0	0	0	0	0	0	822
18:00	4	20	150	242	197	83	13	0	0	0	0	0	0	0	709
19:00	8	21	104	160	225	88	13	2	0	1	0	0	0	0	622
20:00	6	6	23	119	139	100	25	2	0	0	0	0	0	0	420
21:00	3	4	9	37	115	100	23	3	0	0	0	0	0	0	294
22:00	4	0	3	41	109	83	38	4	0	0	0	0	0	0	282
23:00	0	0	0	18	90	85	35	6	0	0	0	0	0	0	234
Total	113	368	1725	2953	2799	1494	425	54	5	1	0	0	0	0	9937

Daily

15th Percentile :	22 MPH
50th Percentile :	29 MPH
85th Percentile :	36 MPH
95th Percentile :	39 MPH
Mean Speed(Average) :	30 MPH
10 MPH Pace Speed :	26-35 MPH
Number in Pace :	5752
Percent in Pace :	57.9%
Number of Vehicles > 35 MPH :	1979
Percent of Vehicles > 35 MPH :	19.9%

Accurate Counts
978-664-2565

Location : Main Street (Route 18)
Location : North of Jessica Lane
City/State: Weymouth, MA

8426SPD1

NB

Start Time	1 15	16 20	21 25	26 30	31 35	36 40	41 45	46 50	51 55	56 60	61 65	66 70	71 75	76 999	Total
11/23/19	0	0	3	15	48	40	12	1	1	0	0	0	0	0	120
01:00	0	0	0	4	18	31	10	3	0	0	0	0	0	0	66
02:00	0	0	0	3	12	6	12	2	0	0	0	0	0	0	35
03:00	0	0	0	3	9	13	4	1	0	0	0	0	0	0	30
04:00	0	0	0	3	9	14	7	1	0	1	0	0	0	0	35
05:00	0	0	0	10	8	24	10	2	0	0	0	0	0	0	54
06:00	0	0	0	19	51	71	13	4	0	0	0	0	0	0	158
07:00	1	1	9	49	111	123	42	11	0	0	0	0	0	0	347
08:00	0	2	26	79	132	132	36	9	0	0	0	0	0	0	416
09:00	9	6	58	141	183	93	39	6	0	0	0	0	0	0	535
10:00	8	17	102	229	190	122	18	4	1	0	0	0	0	0	691
11:00	13	34	140	207	212	102	23	4	0	0	0	0	0	0	735
12 PM	5	19	167	290	230	87	19	3	0	0	0	0	0	0	820
13:00	3	35	141	216	210	102	21	3	1	0	0	0	0	0	732
14:00	20	50	123	242	177	89	18	5	0	0	0	0	0	0	724
15:00	10	19	154	275	220	105	26	2	0	0	0	0	0	0	811
16:00	6	18	148	197	214	124	19	2	0	0	0	0	0	0	728
17:00	6	20	144	231	193	83	17	3	0	0	0	0	0	0	697
18:00	5	5	44	183	179	96	20	3	2	0	0	0	0	0	537
19:00	4	4	38	167	176	84	24	1	0	0	0	0	0	0	498
20:00	3	5	12	68	148	100	23	2	0	0	0	0	0	0	361
21:00	1	3	4	43	128	89	22	5	2	0	0	0	0	0	297
22:00	3	4	8	28	66	88	29	9	2	0	0	0	0	0	237
23:00	0	0	4	35	76	84	29	4	3	0	0	0	0	0	235
Total	97	242	1325	2737	3000	1902	493	90	12	1	0	0	0	0	9899

Daily

15th Percentile :	24 MPH
50th Percentile :	30 MPH
85th Percentile :	37 MPH
95th Percentile :	41 MPH
Mean Speed(Average) :	31 MPH
10 MPH Pace Speed :	26-35 MPH
Number in Pace :	5737
Percent in Pace :	58.0%
Number of Vehicles > 35 MPH :	2498
Percent of Vehicles > 35 MPH :	25.2%

Grand Total	402	985	4434	8245	8439	5076	1366	207	31	3	0	0	0	0	29188

Overall

15th Percentile :	23 MPH
50th Percentile :	30 MPH
85th Percentile :	37 MPH
95th Percentile :	40 MPH
Mean Speed(Average) :	31 MPH
10 MPH Pace Speed :	26-35 MPH
Number in Pace :	16684
Percent in Pace :	57.2%
Number of Vehicles > 35 MPH :	6683
Percent of Vehicles > 35 MPH :	22.9%

Accurate Counts
978-664-2565

Location : Main Street (Route 18)
Location : North of Jessica Lane
City/State: Weymouth, MA

8426SPD1

SB

Start Time	1 15	16 20	21 25	26 30	31 35	36 40	41 45	46 50	51 55	56 60	61 65	66 70	71 75	76 999	Total
11/21/19	2	3	11	7	4	0	0	0	0	0	0	0	0	0	27
01:00	0	6	8	4	1	0	0	0	0	0	0	0	0	0	19
02:00	2	1	9	6	2	0	0	0	0	0	0	0	0	0	20
03:00	5	10	24	11	7	1	0	0	0	0	0	0	0	0	58
04:00	5	19	52	80	38	24	18	2	0	0	0	0	0	0	238
05:00	0	1	6	19	72	207	205	47	5	0	0	0	0	0	562
06:00	26	44	56	138	169	213	56	5	2	1	0	0	0	0	710
07:00	14	26	35	104	215	281	97	13	2	0	0	0	0	0	787
08:00	4	5	7	37	156	266	150	31	4	0	0	0	0	0	660
09:00	6	8	4	34	118	262	126	18	1	0	0	0	0	0	577
10:00	31	45	86	111	89	92	27	8	0	0	0	0	0	0	489
11:00	3	4	12	24	139	215	107	18	0	0	0	0	0	0	522
12 PM	6	3	7	24	123	240	111	14	0	0	0	0	0	0	528
13:00	11	6	33	115	181	137	49	3	1	0	0	0	0	0	536
14:00	15	18	28	90	174	177	55	4	0	0	0	0	0	0	561
15:00	4	8	12	39	119	241	111	14	0	0	1	0	0	0	549
16:00	2	5	16	94	173	282	72	7	1	0	0	0	0	0	652
17:00	13	12	33	75	193	227	57	4	2	0	0	0	0	0	616
18:00	2	5	9	49	173	228	72	8	0	1	0	0	0	0	547
19:00	1	3	4	20	111	161	91	9	1	1	0	0	0	0	402
20:00	1	2	5	23	89	125	70	9	0	0	0	0	0	0	324
21:00	0	2	0	12	75	111	45	8	1	0	1	0	0	0	255
22:00	0	0	1	4	39	85	44	7	1	0	0	0	0	0	181
23:00	0	0	0	0	9	25	33	10	1	0	0	0	0	0	78
Total	153	236	458	1120	2469	3600	1596	239	22	3	2	0	0	0	9898

Daily

15th Percentile :	27 MPH
50th Percentile :	35 MPH
85th Percentile :	41 MPH
95th Percentile :	44 MPH
Mean Speed(Average) :	35 MPH
10 MPH Pace Speed :	31-40 MPH
Number in Pace :	6069
Percent in Pace :	61.3%
Number of Vehicles > 35 MPH :	5462
Percent of Vehicles > 35 MPH :	55.2%

Accurate Counts
978-664-2565

Location : Main Street (Route 18)
Location : North of Jessica Lane
City/State: Weymouth, MA

8426SPD1

SB

Start Time	1 15	16 20	21 25	26 30	31 35	36 40	41 45	46 50	51 55	56 60	61 65	66 70	71 75	76 999	Total
11/22/19	0	0	1	1	5	13	15	4	2	0	0	0	0	0	41
01:00	0	0	3	0	4	6	9	1	0	0	0	0	0	0	23
02:00	0	1	0	0	2	6	4	3	0	0	0	0	0	0	16
03:00	0	0	0	0	5	9	24	5	2	0	0	0	0	0	45
04:00	0	0	0	1	13	43	102	74	19	3	0	0	0	0	255
05:00	0	0	1	13	58	185	209	82	6	3	1	0	0	0	558
06:00	19	38	97	148	119	209	92	8	1	0	0	0	0	0	731
07:00	8	19	31	101	245	235	99	20	2	0	0	0	0	0	760
08:00	41	43	32	44	120	248	107	5	0	0	0	0	0	0	640
09:00	8	7	26	74	188	242	80	7	1	0	0	0	0	0	633
10:00	12	26	40	99	176	203	52	6	0	0	0	0	0	0	614
11:00	12	16	17	65	192	227	56	8	1	0	0	0	0	0	594
12 PM	19	9	11	57	157	218	88	6	0	0	0	0	0	0	565
13:00	6	4	22	65	183	243	89	5	1	0	0	0	0	0	618
14:00	7	3	1	54	201	235	106	4	0	0	0	0	0	0	611
15:00	4	6	15	74	199	219	51	5	0	0	0	0	0	0	573
16:00	7	4	18	80	239	241	54	5	0	0	0	0	0	0	648
17:00	2	7	18	101	277	185	53	2	0	0	0	0	0	0	645
18:00	5	4	12	63	231	209	51	11	0	0	0	0	0	0	586
19:00	1	2	8	16	137	198	72	13	1	1	0	0	0	0	449
20:00	2	1	4	24	102	141	47	4	1	0	0	0	0	0	326
21:00	0	0	3	14	80	120	52	12	2	0	0	0	0	0	283
22:00	0	1	0	6	71	128	49	4	0	1	0	0	0	0	260
23:00	0	0	0	0	25	59	34	6	0	0	0	0	0	0	124
Total	153	191	360	1100	3029	3822	1595	300	39	8	1	0	0	0	10598

Daily

15th Percentile :	29 MPH
50th Percentile :	35 MPH
85th Percentile :	41 MPH
95th Percentile :	44 MPH
Mean Speed(Average) :	35 MPH
10 MPH Pace Speed :	31-40 MPH
Number in Pace :	6851
Percent in Pace :	64.6%
Number of Vehicles > 35 MPH :	5765
Percent of Vehicles > 35 MPH :	54.4%

Accurate Counts
978-664-2565

Location : Main Street (Route 18)
Location : North of Jessica Lane
City/State: Weymouth, MA

8426SPD1

SB

Start Time	1 15	16 20	21 25	26 30	31 35	36 40	41 45	46 50	51 55	56 60	61 65	66 70	71 75	76 999	Total
11/23/19	0	0	0	1	14	31	22	3	0	0	0	0	0	0	71
01:00	0	0	0	1	4	19	15	7	1	0	0	0	0	0	47
02:00	0	0	1	2	6	9	10	4	0	1	0	0	0	0	33
03:00	0	1	0	0	4	11	12	9	0	1	0	0	0	0	38
04:00	0	0	1	7	6	18	44	22	13	2	0	0	0	0	113
05:00	0	0	0	3	21	63	90	42	6	3	0	0	0	0	228
06:00	4	2	4	19	60	132	123	46	8	2	0	0	0	0	400
07:00	1	1	5	24	52	133	184	59	1	0	0	0	0	0	460
08:00	6	1	3	19	87	231	223	41	5	0	0	0	0	0	616
09:00	8	5	4	4	116	311	203	31	3	0	0	0	0	0	685
10:00	6	8	31	50	166	317	161	21	3	0	0	0	0	0	763
11:00	32	31	44	73	246	290	87	11	1	0	0	0	0	0	815
12 PM	10	12	38	103	221	294	110	8	1	0	0	0	0	0	797
13:00	48	39	53	74	188	251	76	9	1	1	0	0	0	0	740
14:00	17	29	42	69	217	295	103	13	0	0	0	0	0	0	785
15:00	5	4	24	64	153	351	131	10	1	0	0	0	0	0	743
16:00	7	9	29	80	219	253	69	9	1	0	0	0	0	0	676
17:00	8	10	8	42	264	283	68	1	0	0	0	0	0	0	684
18:00	9	3	7	59	187	222	101	17	2	0	0	0	0	0	607
19:00	1	2	1	20	107	191	81	14	2	1	0	0	0	0	420
20:00	0	7	0	13	80	149	81	9	1	0	0	0	0	0	340
21:00	1	0	0	7	52	126	102	13	1	1	0	0	0	0	303
22:00	0	0	1	8	32	102	77	17	3	0	0	0	0	0	240
23:00	1	0	1	1	21	71	61	22	2	0	0	0	0	0	180
Total	164	164	297	743	2523	4153	2234	438	56	12	0	0	0	0	10784

Daily

15th Percentile :	30 MPH
50th Percentile :	36 MPH
85th Percentile :	42 MPH
95th Percentile :	44 MPH
Mean Speed(Average) :	37 MPH
10 MPH Pace Speed :	31-40 MPH
Number in Pace :	6676
Percent in Pace :	61.9%
Number of Vehicles > 35 MPH :	6893
Percent of Vehicles > 35 MPH :	63.9%

Grand Total	470	591	1115	2963	8021	11575	5425	977	117	23	3	0	0	0	31280

Overall

15th Percentile :	29 MPH
50th Percentile :	36 MPH
85th Percentile :	41 MPH
95th Percentile :	44 MPH
Mean Speed(Average) :	36 MPH
10 MPH Pace Speed :	31-40 MPH
Number in Pace :	19596
Percent in Pace :	62.6%
Number of Vehicles > 35 MPH :	18120
Percent of Vehicles > 35 MPH :	57.9%

Accurate Counts
978-664-2565

Location : Main Street (Route 18)
Location : North of Jessica Lane
City/State: Weymouth, MA

8426SPD1

NB, SB

Start Time	1 15	16 20	21 25	26 30	31 35	36 40	41 45	46 50	51 55	56 60	61 65	66 70	71 75	76 999	Total
11/21/19	3	4	35	46	14	0	0	0	0	0	0	0	0	0	102
01:00	2	6	23	19	4	0	0	0	0	0	0	0	0	0	54
02:00	5	2	12	14	4	0	0	0	0	0	0	0	0	0	37
03:00	9	16	34	19	7	1	0	0	0	0	0	0	0	0	86
04:00	12	23	63	99	42	25	19	2	0	0	0	0	0	0	285
05:00	0	1	10	28	99	261	216	54	5	0	0	0	0	0	674
06:00	38	51	71	169	261	293	89	9	3	1	0	0	0	0	985
07:00	15	31	88	272	372	401	118	13	3	0	0	0	0	0	1313
08:00	7	11	25	142	304	376	189	37	5	1	0	0	0	0	1097
09:00	9	12	41	132	288	356	152	22	2	0	0	0	0	0	1014
10:00	63	149	161	192	148	121	43	9	3	0	0	0	0	0	889
11:00	5	10	65	145	288	340	135	22	1	0	0	0	0	0	1011
12 PM	15	14	88	143	286	349	152	18	0	0	0	0	0	0	1065
13:00	20	16	94	301	376	215	58	8	1	0	0	0	0	0	1089
14:00	42	41	115	317	339	251	74	6	0	0	0	0	0	0	1185
15:00	20	56	153	247	298	343	130	18	1	0	1	0	0	0	1267
16:00	27	66	263	326	346	358	88	9	1	0	0	0	0	0	1484
17:00	21	50	223	364	354	299	64	6	2	0	0	0	0	0	1383
18:00	10	24	148	255	379	345	84	9	0	1	0	0	0	0	1255
19:00	5	18	78	173	299	258	108	10	2	1	0	0	0	0	952
20:00	7	8	40	171	240	212	101	11	1	0	0	0	0	0	791
21:00	4	2	8	67	187	201	73	11	1	0	1	0	0	0	555
22:00	6	0	2	26	114	181	84	10	2	0	0	0	0	0	425
23:00	0	0	2	8	60	94	67	18	3	0	0	0	0	0	252
Total	345	611	1842	3675	5109	5280	2044	302	36	4	2	0	0	0	19250

Daily

15th Percentile :	25 MPH
50th Percentile :	33 MPH
85th Percentile :	39 MPH
95th Percentile :	43 MPH
Mean Speed(Average) :	33 MPH
10 MPH Pace Speed :	31-40 MPH
Number in Pace :	10389
Percent in Pace :	54.0%
Number of Vehicles > 35 MPH :	7668
Percent of Vehicles > 35 MPH :	39.8%

Accurate Counts
978-664-2565

Location : Main Street (Route 18)
Location : North of Jessica Lane
City/State: Weymouth, MA

8426SPD1

NB, SB

Start Time	1 15	16 20	21 25	26 30	31 35	36 40	41 45	46 50	51 55	56 60	61 65	66 70	71 75	76 999	Total
11/22/19	0	0	1	5	28	37	34	5	4	0	0	0	0	0	114
01:00	0	1	5	8	19	24	15	3	1	0	0	0	0	0	76
02:00	0	1	1	0	10	13	9	3	1	0	0	0	0	0	38
03:00	0	0	0	4	14	13	31	5	2	0	0	0	0	0	69
04:00	0	0	0	3	24	51	107	74	20	3	0	0	0	0	282
05:00	0	0	5	21	84	233	221	89	6	3	1	0	0	0	663
06:00	19	39	107	190	219	285	121	13	1	0	0	0	0	0	994
07:00	11	25	43	215	409	357	143	27	2	0	0	0	0	0	1232
08:00	42	58	75	125	287	353	141	7	0	0	0	0	0	0	1088
09:00	9	29	139	217	335	317	96	9	1	0	0	0	0	0	1152
10:00	25	46	142	285	286	242	63	6	0	0	0	0	0	0	1095
11:00	20	39	118	270	341	265	61	9	1	0	0	0	0	0	1124
12 PM	36	45	149	287	295	265	97	8	0	0	0	0	0	0	1182
13:00	8	15	121	314	349	338	109	7	1	0	0	0	0	0	1262
14:00	24	51	116	265	366	327	121	6	0	0	0	0	0	0	1276
15:00	16	62	223	336	387	270	66	7	0	0	0	0	0	0	1367
16:00	12	32	261	378	396	309	72	5	0	0	0	0	0	0	1465
17:00	11	57	263	390	458	223	61	4	0	0	0	0	0	0	1467
18:00	9	24	162	305	428	292	64	11	0	0	0	0	0	0	1295
19:00	9	23	112	176	362	286	85	15	1	2	0	0	0	0	1071
20:00	8	7	27	143	241	241	72	6	1	0	0	0	0	0	746
21:00	3	4	12	51	195	220	75	15	2	0	0	0	0	0	577
22:00	4	1	3	47	180	211	87	8	0	1	0	0	0	0	542
23:00	0	0	0	18	115	144	69	12	0	0	0	0	0	0	358
Total	266	559	2085	4053	5828	5316	2020	354	44	9	1	0	0	0	20535

Daily

15th Percentile :	25 MPH
50th Percentile :	32 MPH
85th Percentile :	39 MPH
95th Percentile :	43 MPH
Mean Speed(Average) :	33 MPH
10 MPH Pace Speed :	31-40 MPH
Number in Pace :	11144
Percent in Pace :	54.3%
Number of Vehicles > 35 MPH :	7744
Percent of Vehicles > 35 MPH :	37.7%

Accurate Counts
978-664-2565

Location : Main Street (Route 18)
Location : North of Jessica Lane
City/State: Weymouth, MA

8426SPD1

NB, SB

Start Time	1 15	16 20	21 25	26 30	31 35	36 40	41 45	46 50	51 55	56 60	61 65	66 70	71 75	76 999	Total
11/23/19	0	0	3	16	62	71	34	4	1	0	0	0	0	0	191
01:00	0	0	0	5	22	50	25	10	1	0	0	0	0	0	113
02:00	0	0	1	5	18	15	22	6	0	1	0	0	0	0	68
03:00	0	1	0	3	13	24	16	10	0	1	0	0	0	0	68
04:00	0	0	1	10	15	32	51	23	13	3	0	0	0	0	148
05:00	0	0	0	13	29	87	100	44	6	3	0	0	0	0	282
06:00	4	2	4	38	111	203	136	50	8	2	0	0	0	0	558
07:00	2	2	14	73	163	256	226	70	1	0	0	0	0	0	807
08:00	6	3	29	98	219	363	259	50	5	0	0	0	0	0	1032
09:00	17	11	62	145	299	404	242	37	3	0	0	0	0	0	1220
10:00	14	25	133	279	356	439	179	25	4	0	0	0	0	0	1454
11:00	45	65	184	280	458	392	110	15	1	0	0	0	0	0	1550
12 PM	15	31	205	393	451	381	129	11	1	0	0	0	0	0	1617
13:00	51	74	194	290	398	353	97	12	2	1	0	0	0	0	1472
14:00	37	79	165	311	394	384	121	18	0	0	0	0	0	0	1509
15:00	15	23	178	339	373	456	157	12	1	0	0	0	0	0	1554
16:00	13	27	177	277	433	377	88	11	1	0	0	0	0	0	1404
17:00	14	30	152	273	457	366	85	4	0	0	0	0	0	0	1381
18:00	14	8	51	242	366	318	121	20	4	0	0	0	0	0	1144
19:00	5	6	39	187	283	275	105	15	2	1	0	0	0	0	918
20:00	3	12	12	81	228	249	104	11	1	0	0	0	0	0	701
21:00	2	3	4	50	180	215	124	18	3	1	0	0	0	0	600
22:00	3	4	9	36	98	190	106	26	5	0	0	0	0	0	477
23:00	1	0	5	36	97	155	90	26	5	0	0	0	0	0	415
Total	261	406	1622	3480	5523	6055	2727	528	68	13	0	0	0	0	20683

Daily

15th Percentile :	26 MPH
50th Percentile :	34 MPH
85th Percentile :	40 MPH
95th Percentile :	44 MPH
Mean Speed(Average) :	34 MPH
10 MPH Pace Speed :	31-40 MPH
Number in Pace :	11578
Percent in Pace :	56.0%
Number of Vehicles > 35 MPH :	9391
Percent of Vehicles > 35 MPH :	45.4%

Grand Total	872	1576	5549	11208	16460	16651	6791	1184	148	26	3	0	0	0	60468

Overall

15th Percentile :	25 MPH
50th Percentile :	33 MPH
85th Percentile :	39 MPH
95th Percentile :	43 MPH
Mean Speed(Average) :	33 MPH
10 MPH Pace Speed :	31-40 MPH
Number in Pace :	33111
Percent in Pace :	54.8%
Number of Vehicles > 35 MPH :	24803
Percent of Vehicles > 35 MPH :	41.0%

Accurate Counts
978-664-2565

Location : Pond Street
Location : West of Nelson Road
City/State: Weymouth, MA

8426SPD2

WB

Start Time	1 3	4 6	7 9	10 12	13 15	16 18	19 21	22 24	25 27	28 30	31 33	34 36	37 39	40 999	Total
11/21/19	0	0	0	0	0	0	0	0	0	1	2	4	2	0	9
01:00	0	0	0	0	0	0	0	0	1	0	2	0	0	0	3
02:00	0	0	0	0	0	0	0	0	0	1	1	0	2	1	5
03:00	0	0	0	0	0	0	0	0	0	0	2	0	0	1	3
04:00	0	0	0	0	0	0	0	1	3	4	6	7	5	3	29
05:00	0	0	0	0	0	0	0	1	3	12	24	17	13	4	74
06:00	0	0	0	0	1	0	0	2	17	53	46	25	9	3	156
07:00	0	0	0	0	1	1	1	3	25	51	69	43	10	3	207
08:00	0	0	0	0	0	1	1	5	11	48	59	29	5	6	165
09:00	0	0	0	0	0	0	2	8	19	29	53	64	15	7	197
10:00	0	0	0	0	0	0	1	4	16	51	55	33	19	4	183
11:00	0	0	0	0	1	0	0	5	9	32	57	30	9	7	150
12 PM	0	0	0	0	0	0	0	0	12	35	50	31	19	5	152
13:00	0	0	0	0	0	0	1	3	12	45	60	44	11	9	185
14:00	0	0	0	0	0	1	0	3	17	32	62	32	10	6	163
15:00	0	0	0	1	1	3	4	4	25	50	48	32	11	5	184
16:00	0	0	0	0	0	0	8	12	39	44	41	9	2	0	155
17:00	0	0	0	1	3	2	6	27	47	48	32	10	3	1	180
18:00	0	0	0	2	0	0	1	6	15	40	35	28	3	2	132
19:00	0	0	0	0	1	0	0	0	16	21	38	10	6	3	95
20:00	0	0	0	0	0	0	0	0	8	16	17	18	5	2	66
21:00	0	0	0	0	0	0	1	2	5	14	14	19	4	6	65
22:00	0	0	0	0	0	0	0	1	4	6	6	5	2	1	25
23:00	0	0	0	0	0	0	0	0	2	4	3	4	2	0	15
Total	0	0	0	4	8	8	26	87	306	637	782	494	167	79	2598

Daily

15th Percentile :	26 MPH
50th Percentile :	30 MPH
85th Percentile :	34 MPH
95th Percentile :	36 MPH
Mean Speed(Average) :	31 MPH
10 MPH Pace Speed :	27-36 MPH
Number in Pace :	2015
Percent in Pace :	77.6%
Number of Vehicles > 30 MPH :	1522
Percent of Vehicles > 30 MPH :	58.6%

Accurate Counts
978-664-2565

Location : Pond Street
Location : West of Nelson Road
City/State: Weymouth, MA

8426SPD2

WB

Start Time	1 3	4 6	7 9	10 12	13 15	16 18	19 21	22 24	25 27	28 30	31 33	34 36	37 39	40 999	Total
11/22/19	0	0	0	0	0	0	0	0	0	2	0	2	1	1	6
01:00	0	0	0	0	0	0	0	0	2	0	1	0	0	0	3
02:00	0	0	0	0	0	0	0	0	0	1	0	0	0	0	1
03:00	0	0	0	0	0	0	0	0	1	0	0	0	3	0	4
04:00	0	0	0	0	0	0	0	1	1	2	5	4	6	3	22
05:00	0	0	0	0	0	1	0	0	3	5	11	24	20	3	67
06:00	0	0	0	1	0	0	1	1	5	48	58	35	21	4	174
07:00	0	0	0	0	0	1	3	5	22	52	81	45	13	7	229
08:00	0	0	0	0	0	1	1	2	17	41	52	45	19	7	185
09:00	0	0	0	0	0	0	0	2	11	32	44	42	15	4	150
10:00	0	0	0	0	1	0	2	1	13	42	57	23	19	5	163
11:00	0	0	0	1	0	1	2	1	11	35	39	28	11	5	134
12 PM	0	0	0	0	0	0	1	7	15	34	27	21	8	4	117
13:00	0	0	0	1	0	0	0	2	11	39	37	30	6	3	129
14:00	0	0	0	0	0	0	3	2	22	28	43	17	9	1	125
15:00	0	0	0	0	0	1	1	9	20	41	28	20	3	2	125
16:00	0	0	0	0	0	0	2	10	23	43	40	16	6	3	143
17:00	0	0	0	0	0	2	10	11	50	39	26	8	2	1	149
18:00	0	0	0	0	0	2	1	7	17	36	35	18	7	1	124
19:00	0	0	0	0	0	0	0	1	10	30	38	20	6	3	108
20:00	0	0	0	0	0	0	0	3	5	29	20	16	4	1	78
21:00	0	0	0	0	0	0	0	0	3	16	17	14	4	4	58
22:00	0	0	0	0	0	0	0	1	1	9	14	7	2	1	35
23:00	0	0	0	0	0	0	2	0	2	1	6	5	7	3	26
Total	0	0	0	3	1	9	29	66	265	605	679	440	192	66	2355

Daily

15th Percentile :	26 MPH
50th Percentile :	30 MPH
85th Percentile :	34 MPH
95th Percentile :	37 MPH
Mean Speed(Average) :	31 MPH
10 MPH Pace Speed :	27-36 MPH
Number in Pace :	1812
Percent in Pace :	76.9%
Number of Vehicles > 30 MPH :	1377
Percent of Vehicles > 30 MPH :	58.5%

Accurate Counts
978-664-2565

Location : Pond Street
Location : West of Nelson Road
City/State: Weymouth, MA

8426SPD2

WB

Start Time	1 3	4 6	7 9	10 12	13 15	16 18	19 21	22 24	25 27	28 30	31 33	34 36	37 39	40 999	Total
11/23/19	0	0	0	0	0	0	0	1	1	3	6	4	1	1	17
01:00	0	0	0	0	0	0	0	0	1	2	0	2	3	1	9
02:00	0	0	0	0	0	0	0	0	0	2	3	1	0	0	6
03:00	0	0	0	0	0	0	0	0	0	0	1	0	0	1	2
04:00	0	0	0	0	0	0	0	0	0	1	2	2	0	1	6
05:00	0	0	0	0	0	0	1	1	1	1	8	6	6	0	24
06:00	0	0	0	0	0	0	0	0	4	7	18	24	10	4	67
07:00	0	0	0	0	0	0	0	3	4	13	17	30	17	2	86
08:00	0	0	0	0	1	2	2	4	6	26	42	35	13	3	134
09:00	0	0	0	0	0	0	1	0	7	33	49	33	21	7	151
10:00	0	0	0	0	0	0	1	4	16	42	47	30	15	5	160
11:00	0	0	0	0	3	2	0	3	11	41	78	37	10	4	189
12 PM	0	0	0	0	0	0	0	1	22	54	60	41	13	1	192
13:00	0	0	0	0	0	1	1	10	14	45	62	44	9	4	190
14:00	0	0	0	0	0	1	2	9	24	62	49	35	6	5	193
15:00	0	0	0	0	0	0	1	0	12	47	51	30	10	2	153
16:00	0	0	0	0	0	0	1	1	13	36	43	29	14	1	138
17:00	0	0	0	0	0	1	0	4	14	34	48	27	7	1	136
18:00	0	0	0	0	0	0	5	9	13	37	34	17	12	2	129
19:00	0	0	0	0	0	0	0	1	11	18	32	19	10	2	93
20:00	0	0	0	0	0	0	0	1	5	20	22	13	10	1	72
21:00	0	0	0	0	0	0	0	1	8	11	14	15	4	0	53
22:00	0	0	0	0	0	0	1	1	4	8	22	7	6	2	51
23:00	0	0	0	0	0	0	0	0	1	10	11	5	3	1	31
Total	0	0	0	0	4	7	16	54	192	553	719	486	200	51	2282

Daily

15th Percentile :	27 MPH
50th Percentile :	31 MPH
85th Percentile :	35 MPH
95th Percentile :	37 MPH
Mean Speed(Average) :	32 MPH
10 MPH Pace Speed :	28-37 MPH
Number in Pace :	1825
Percent in Pace :	80.0%
Number of Vehicles > 30 MPH :	1456
Percent of Vehicles > 30 MPH :	63.8%

Grand Total	0	0	0	7	13	24	71	207	763	1795	2180	1420	559	196	7235

Overall

15th Percentile :	26 MPH
50th Percentile :	30 MPH
85th Percentile :	34 MPH
95th Percentile :	37 MPH
Mean Speed(Average) :	31 MPH
10 MPH Pace Speed :	27-36 MPH
Number in Pace :	5649
Percent in Pace :	78.1%
Number of Vehicles > 30 MPH :	4355
Percent of Vehicles > 30 MPH :	60.2%

Accurate Counts
978-664-2565

Location : Pond Street
Location : West of Nelson Road
City/State: Weymouth, MA

8426SPD2

EB

Start Time	1 3	4 6	7 9	10 12	13 15	16 18	19 21	22 24	25 27	28 30	31 33	34 36	37 39	40 999	Total
11/21/19	0	0	0	0	0	0	0	0	0	0	7	3	4	0	14
01:00	0	0	0	0	0	0	0	0	0	4	3	2	1	2	12
02:00	0	0	0	0	0	0	0	0	0	1	1	1	2	2	7
03:00	0	0	0	0	0	0	0	0	1	1	0	0	1	4	7
04:00	0	0	0	0	0	1	0	0	0	1	1	2	2	2	9
05:00	0	0	0	0	0	0	0	1	1	7	14	18	6	3	50
06:00	0	0	0	0	0	0	1	2	16	34	46	23	13	3	138
07:00	0	0	0	1	5	3	10	10	39	64	54	34	13	5	238
08:00	0	0	1	0	4	5	9	7	15	42	55	44	18	13	213
09:00	0	0	0	0	0	3	0	5	13	44	60	66	26	10	227
10:00	0	0	0	0	0	1	2	2	15	28	63	61	39	18	229
11:00	0	0	0	0	0	1	2	4	12	34	62	81	36	21	253
12 PM	0	0	0	0	4	3	4	10	18	31	80	78	47	10	285
13:00	0	0	0	0	2	2	2	11	21	52	77	77	42	20	306
14:00	0	0	0	7	13	13	20	27	35	62	82	62	36	9	366
15:00	0	0	0	19	20	26	22	27	52	75	76	48	19	3	387
16:00	0	0	4	57	113	89	37	23	21	6	5	3	0	0	358
17:00	0	0	9	72	101	68	32	17	8	6	4	1	1	0	319
18:00	0	0	0	7	19	5	7	16	39	72	90	49	16	3	323
19:00	0	0	0	0	0	0	0	8	18	40	79	42	19	9	215
20:00	0	0	0	0	0	0	0	2	5	24	66	51	17	11	176
21:00	0	0	0	0	0	0	0	2	4	17	22	21	15	10	91
22:00	0	0	0	0	0	0	0	1	6	7	22	14	12	2	64
23:00	0	0	0	0	0	0	0	0	0	3	9	11	8	11	42
Total	0	0	14	163	281	220	148	175	339	655	978	792	393	171	4329

Daily

15th Percentile :	17 MPH
50th Percentile :	30 MPH
85th Percentile :	35 MPH
95th Percentile :	37 MPH
Mean Speed(Average) :	28 MPH
10 MPH Pace Speed :	28-37 MPH
Number in Pace :	2556
Percent in Pace :	59.0%
Number of Vehicles > 30 MPH :	2334
Percent of Vehicles > 30 MPH :	53.9%

Accurate Counts
978-664-2565

Location : Pond Street
Location : West of Nelson Road
City/State: Weymouth, MA

8426SPD2

EB

Start Time	1 3	4 6	7 9	10 12	13 15	16 18	19 21	22 24	25 27	28 30	31 33	34 36	37 39	40 999	Total
11/22/19	0	0	0	0	0	0	0	0	0	2	4	5	3	2	16
01:00	0	0	0	0	0	0	0	0	0	1	2	3	1	2	9
02:00	0	0	0	0	0	0	0	0	1	0	3	0	2	0	6
03:00	0	0	0	0	0	0	0	0	0	0	0	1	0	2	3
04:00	0	0	0	0	0	0	0	0	0	1	0	5	2	3	11
05:00	0	0	0	0	0	0	0	0	1	6	8	12	11	4	42
06:00	0	0	0	0	0	0	0	4	8	20	38	27	15	13	125
07:00	0	0	0	1	1	4	7	13	12	46	69	40	16	10	219
08:00	0	0	0	0	1	2	4	17	16	39	68	45	22	11	225
09:00	0	0	0	0	0	1	2	0	4	23	59	53	25	15	182
10:00	0	0	0	0	0	0	0	3	7	36	58	52	30	8	194
11:00	0	0	1	0	1	2	2	10	12	56	70	51	19	11	235
12 PM	0	0	0	0	0	0	3	10	34	51	76	62	21	7	264
13:00	0	0	0	0	0	3	2	11	24	56	79	68	38	14	295
14:00	0	0	0	0	5	7	13	24	32	96	81	68	16	4	346
15:00	0	0	2	18	51	52	45	34	38	46	54	24	8	3	375
16:00	0	0	8	29	47	38	23	36	52	57	38	23	7	2	360
17:00	0	0	3	87	99	70	27	7	9	5	1	1	0	0	309
18:00	0	0	0	1	4	8	4	5	14	77	78	60	30	5	286
19:00	0	0	0	1	2	1	0	0	6	41	56	61	29	15	212
20:00	0	0	0	0	0	0	0	1	8	21	43	36	24	12	145
21:00	0	0	0	0	0	1	1	2	4	6	28	24	12	7	85
22:00	0	0	0	0	0	0	0	1	4	10	21	29	13	18	96
23:00	0	0	0	0	0	0	0	0	1	3	15	18	11	19	67
Total	0	0	14	137	211	189	133	178	287	699	949	768	355	187	4107

Daily

15th Percentile :	18 MPH
50th Percentile :	30 MPH
85th Percentile :	35 MPH
95th Percentile :	37 MPH
Mean Speed(Average) :	29 MPH
10 MPH Pace Speed :	28-37 MPH
Number in Pace :	2534
Percent in Pace :	61.7%
Number of Vehicles > 30 MPH :	2259
Percent of Vehicles > 30 MPH :	55.0%

Accurate Counts
978-664-2565

Location : Pond Street
Location : West of Nelson Road
City/State: Weymouth, MA

8426SPD2

EB

Start Time	1 3	4 6	7 9	10 12	13 15	16 18	19 21	22 24	25 27	28 30	31 33	34 36	37 39	40 999	Total
11/23/19	0	0	0	0	0	0	0	1	0	7	13	5	14	2	42
01:00	0	0	0	0	0	0	0	0	0	5	4	12	3	7	31
02:00	0	0	0	0	0	0	0	0	0	4	1	5	1	2	13
03:00	0	0	0	0	0	0	0	0	0	0	4	3	2	0	9
04:00	0	0	0	0	0	0	0	0	0	1	2	2	1	1	7
05:00	0	0	0	0	0	2	0	1	2	4	10	6	3	5	33
06:00	0	0	0	0	0	0	0	0	1	11	16	18	15	13	74
07:00	0	0	0	0	0	1	2	2	5	13	29	29	22	8	111
08:00	0	0	0	0	0	0	1	2	9	34	52	54	31	18	201
09:00	0	0	0	0	0	0	1	1	5	34	61	74	35	16	227
10:00	0	0	0	2	4	5	7	11	29	51	65	77	35	13	299
11:00	0	0	0	1	5	7	3	12	21	56	97	75	32	18	327
12 PM	0	0	0	6	7	5	10	6	27	62	92	85	36	19	355
13:00	0	0	0	1	9	3	6	14	29	56	64	65	45	8	300
14:00	0	0	0	0	1	2	2	1	14	46	86	94	31	15	292
15:00	0	0	0	1	8	5	7	13	20	46	83	77	33	17	310
16:00	0	0	0	0	1	1	1	4	24	52	98	75	28	13	297
17:00	0	0	0	0	0	0	2	9	24	61	70	57	22	10	255
18:00	0	0	0	0	0	1	2	2	12	42	60	53	24	9	205
19:00	0	0	0	0	0	1	1	3	4	21	39	57	20	12	158
20:00	0	0	0	0	0	0	0	0	5	13	34	25	15	5	97
21:00	0	0	0	0	0	0	0	0	3	6	20	24	15	6	74
22:00	0	0	0	0	0	1	0	2	6	17	26	19	11	7	89
23:00	0	0	0	0	0	0	0	1	4	5	23	14	6	6	59
Total	0	0	0	11	35	34	45	85	244	647	1049	1005	480	230	3865

Daily

15th Percentile :	27 MPH
50th Percentile :	32 MPH
85th Percentile :	35 MPH
95th Percentile :	37 MPH
Mean Speed(Average) :	32 MPH
10 MPH Pace Speed :	28-37 MPH
Number in Pace :	2861
Percent in Pace :	74.0%
Number of Vehicles > 30 MPH :	2764
Percent of Vehicles > 30 MPH :	71.5%

Grand Total	0	0	28	311	527	443	326	438	870	2001	2976	2565	1228	588	12301

Overall

15th Percentile :	21 MPH
50th Percentile :	30 MPH
85th Percentile :	35 MPH
95th Percentile :	37 MPH
Mean Speed(Average) :	30 MPH
10 MPH Pace Speed :	28-37 MPH
Number in Pace :	7951
Percent in Pace :	64.6%
Number of Vehicles > 30 MPH :	7357
Percent of Vehicles > 30 MPH :	59.8%

Accurate Counts
978-664-2565

Location : Pond Street
Location : West of Nelson Road
City/State: Weymouth, MA

8426SPD2

WB, EB

Start Time	1 3	4 6	7 9	10 12	13 15	16 18	19 21	22 24	25 27	28 30	31 33	34 36	37 39	40 999	Total
11/21/19	0	0	0	0	0	0	0	0	0	1	9	7	6	0	23
01:00	0	0	0	0	0	0	0	0	1	4	5	2	1	2	15
02:00	0	0	0	0	0	0	0	0	0	2	2	1	4	3	12
03:00	0	0	0	0	0	0	0	0	1	1	2	0	1	5	10
04:00	0	0	0	0	0	1	0	1	3	5	7	9	7	5	38
05:00	0	0	0	0	0	0	0	2	4	19	38	35	19	7	124
06:00	0	0	0	0	1	0	1	4	33	87	92	48	22	6	294
07:00	0	0	0	1	6	4	11	13	64	115	123	77	23	8	445
08:00	0	0	1	0	4	6	10	12	26	90	114	73	23	19	378
09:00	0	0	0	0	0	3	2	13	32	73	113	130	41	17	424
10:00	0	0	0	0	0	1	3	6	31	79	118	94	58	22	412
11:00	0	0	0	0	1	1	2	9	21	66	119	111	45	28	403
12 PM	0	0	0	0	4	3	4	10	30	66	130	109	66	15	437
13:00	0	0	0	0	2	2	3	14	33	97	137	121	53	29	491
14:00	0	0	0	7	13	14	20	30	52	94	144	94	46	15	529
15:00	0	0	0	20	21	29	26	31	77	125	124	80	30	8	571
16:00	0	0	4	57	113	89	45	35	60	50	46	12	2	0	513
17:00	0	0	9	73	104	70	38	44	55	54	36	11	4	1	499
18:00	0	0	0	9	19	5	8	22	54	112	125	77	19	5	455
19:00	0	0	0	0	1	0	0	8	34	61	117	52	25	12	310
20:00	0	0	0	0	0	0	0	2	13	40	83	69	22	13	242
21:00	0	0	0	0	0	0	1	4	9	31	36	40	19	16	156
22:00	0	0	0	0	0	0	0	2	10	13	28	19	14	3	89
23:00	0	0	0	0	0	0	0	0	2	7	12	15	10	11	57
Total	0	0	14	167	289	228	174	262	645	1292	1760	1286	560	250	6927

Daily

15th Percentile :	22 MPH
50th Percentile :	30 MPH
85th Percentile :	34 MPH
95th Percentile :	37 MPH
Mean Speed(Average) :	29 MPH
10 MPH Pace Speed :	27-36 MPH
Number in Pace :	4553
Percent in Pace :	65.7%
Number of Vehicles > 30 MPH :	3856
Percent of Vehicles > 30 MPH :	55.7%

Accurate Counts
978-664-2565

Location : Pond Street
Location : West of Nelson Road
City/State: Weymouth, MA

8426SPD2

WB, EB

Start Time	1 3	4 6	7 9	10 12	13 15	16 18	19 21	22 24	25 27	28 30	31 33	34 36	37 39	40 999	Total
11/22/19	0	0	0	0	0	0	0	0	0	4	4	7	4	3	22
01:00	0	0	0	0	0	0	0	0	2	1	3	3	1	2	12
02:00	0	0	0	0	0	0	0	0	1	1	3	0	2	0	7
03:00	0	0	0	0	0	0	0	0	1	0	0	1	3	2	7
04:00	0	0	0	0	0	0	0	1	1	3	5	9	8	6	33
05:00	0	0	0	0	0	1	0	0	4	11	19	36	31	7	109
06:00	0	0	0	1	0	0	1	5	13	68	96	62	36	17	299
07:00	0	0	0	1	1	5	10	18	34	98	150	85	29	17	448
08:00	0	0	0	0	1	3	5	19	33	80	120	90	41	18	410
09:00	0	0	0	0	0	1	2	2	15	55	103	95	40	19	332
10:00	0	0	0	0	1	0	2	4	20	78	115	75	49	13	357
11:00	0	0	1	1	1	3	4	11	23	91	109	79	30	16	369
12 PM	0	0	0	0	0	0	4	17	49	85	103	83	29	11	381
13:00	0	0	0	1	0	3	2	13	35	95	116	98	44	17	424
14:00	0	0	0	0	5	7	16	26	54	124	124	85	25	5	471
15:00	0	0	2	18	51	53	46	43	58	87	82	44	11	5	500
16:00	0	0	8	29	47	38	25	46	75	100	78	39	13	5	503
17:00	0	0	3	87	99	72	37	18	59	44	27	9	2	1	458
18:00	0	0	0	1	4	10	5	12	31	113	113	78	37	6	410
19:00	0	0	0	1	2	1	0	1	16	71	94	81	35	18	320
20:00	0	0	0	0	0	0	0	4	13	50	63	52	28	13	223
21:00	0	0	0	0	0	1	1	2	7	22	45	38	16	11	143
22:00	0	0	0	0	0	0	0	2	5	19	35	36	15	19	131
23:00	0	0	0	0	0	0	2	0	3	4	21	23	18	22	93
Total	0	0	14	140	212	198	162	244	552	1304	1628	1208	547	253	6462

Daily

15th Percentile :	23 MPH
50th Percentile :	30 MPH
85th Percentile :	35 MPH
95th Percentile :	37 MPH
Mean Speed(Average) :	30 MPH
10 MPH Pace Speed :	27-36 MPH
Number in Pace :	4324
Percent in Pace :	66.9%
Number of Vehicles > 30 MPH :	3636
Percent of Vehicles > 30 MPH :	56.3%

Accurate Counts
978-664-2565

Location : Pond Street
Location : West of Nelson Road
City/State: Weymouth, MA

8426SPD2

WB, EB

Start Time	1 3	4 6	7 9	10 12	13 15	16 18	19 21	22 24	25 27	28 30	31 33	34 36	37 39	40 999	Total
11/23/19	0	0	0	0	0	0	0	2	1	10	19	9	15	3	59
01:00	0	0	0	0	0	0	0	0	1	7	4	14	6	8	40
02:00	0	0	0	0	0	0	0	0	0	6	4	6	1	2	19
03:00	0	0	0	0	0	0	0	0	0	0	5	3	2	1	11
04:00	0	0	0	0	0	0	0	0	0	2	4	4	1	2	13
05:00	0	0	0	0	0	2	1	2	3	5	18	12	9	5	57
06:00	0	0	0	0	0	0	0	0	5	18	34	42	25	17	141
07:00	0	0	0	0	0	1	2	5	9	26	46	59	39	10	197
08:00	0	0	0	0	1	2	3	6	15	60	94	89	44	21	335
09:00	0	0	0	0	0	0	2	1	12	67	110	107	56	23	378
10:00	0	0	0	2	4	5	8	15	45	93	112	107	50	18	459
11:00	0	0	0	1	8	9	3	15	32	97	175	112	42	22	516
12 PM	0	0	0	6	7	5	10	7	49	116	152	126	49	20	547
13:00	0	0	0	1	9	4	7	24	43	101	126	109	54	12	490
14:00	0	0	0	0	1	3	4	10	38	108	135	129	37	20	485
15:00	0	0	0	1	8	5	8	13	32	93	134	107	43	19	463
16:00	0	0	0	0	1	1	2	5	37	88	141	104	42	14	435
17:00	0	0	0	0	0	1	2	13	38	95	118	84	29	11	391
18:00	0	0	0	0	0	1	7	11	25	79	94	70	36	11	334
19:00	0	0	0	0	0	1	1	4	15	39	71	76	30	14	251
20:00	0	0	0	0	0	0	0	1	10	33	56	38	25	6	169
21:00	0	0	0	0	0	0	0	1	11	17	34	39	19	6	127
22:00	0	0	0	0	0	1	1	3	10	25	48	26	17	9	140
23:00	0	0	0	0	0	0	0	1	5	15	34	19	9	7	90
Total	0	0	0	11	39	41	61	139	436	1200	1768	1491	680	281	6147

Daily

15th Percentile :	27 MPH
50th Percentile :	31 MPH
85th Percentile :	35 MPH
95th Percentile :	37 MPH
Mean Speed(Average) :	32 MPH
10 MPH Pace Speed :	28-37 MPH
Number in Pace :	4686
Percent in Pace :	76.2%
Number of Vehicles > 30 MPH :	4220
Percent of Vehicles > 30 MPH :	68.7%

Grand Total	0	0	28	318	540	467	397	645	1633	3796	5156	3985	1787	784	19536

Overall

15th Percentile :	24 MPH
50th Percentile :	30 MPH
85th Percentile :	35 MPH
95th Percentile :	37 MPH
Mean Speed(Average) :	30 MPH
10 MPH Pace Speed :	28-37 MPH
Number in Pace :	13533
Percent in Pace :	69.3%
Number of Vehicles > 30 MPH :	11712
Percent of Vehicles > 30 MPH :	60.0%

Location : Route 18 84280001
Location : at Jessica Lane
City/State: Weymouth, MA
Direction: NB,

5/5/2022 Time	0 - 15 MPH	> 15 - 20 MPH	> 20 - 25 MPH	> 25 - 30 MPH	> 30 - 35 MPH	> 35 - 40 MPH	> 40 - 45 MPH	> 45 - 50 MPH	> 50 - 55 MPH	> 55 - 60 MPH	> 60 - 65 MPH	> 65 - 70 MPH	> 70 MPH	Total
12:00 AM	0	0	1	0	8	12	11	4	0	0	0	0	0	36
1:00	1	0	0	2	3	5	10	3	1	0	0	0	0	25
2:00	0	0	0	2	6	8	8	3	1	0	0	0	0	28
3:00	0	0	0	0	5	12	11	11	4	4	0	0	0	47
4:00	0	1	4	8	20	49	39	54	26	7	2	0	0	210
5:00	1	13	21	37	72	121	128	66	36	10	1	0	0	506
6:00	28	22	58	84	103	152	149	83	33	10	1	0	0	723
7:00	38	25	67	91	159	180	112	46	14	2	0	1	0	735
8:00	31	38	71	92	115	136	122	51	16	1	2	0	0	675
9:00	17	12	48	79	130	155	89	38	12	1	0	0	0	581
10:00	12	16	30	75	136	136	98	55	6	0	3	0	0	567
11:00	23	21	64	99	128	138	51	13	9	0	0	0	0	546
12:00 PM	35	53	59	115	118	122	48	27	3	0	0	0	0	580
1:00	49	63	52	127	131	104	36	26	7	2	0	0	0	597
2:00	33	36	75	97	133	97	61	23	5	1	0	0	0	561
3:00	26	38	60	112	148	118	69	18	3	1	0	0	0	593
4:00	28	21	85	102	149	101	60	16	2	0	0	0	0	564
5:00	32	38	80	135	164	105	45	11	5	2	0	0	0	617
6:00	43	38	93	125	116	107	71	20	2	0	0	0	0	615
7:00	8	17	37	95	132	127	58	24	11	0	0	0	0	509
8:00	8	12	39	66	113	81	53	18	1	1	0	1	0	393
9:00	0	3	8	43	84	66	38	15	4	0	0	0	0	261
10:00	0	0	3	24	50	57	40	21	11	2	0	2	0	210
11:00	0	1	5	6	17	29	21	13	1	0	0	0	0	93
Total	413	468	960	1616	2240	2218	1428	659	213	44	9	4	0	10272

Percentile	15th	50th	85th	95th
Speed	24	34	42	47

Mean Speed (Average)	33.1
10 MPH Pace Speed	30-39
Number in Pace	4446
Percent in Pace	43.3%
Number > 40 MPH	2357
Percent > 40 MPH	22.9%

Location : Route 18 84280001
Location : at Jessica Lane
City/State: Weymouth, MA
Direction: NB,

5/6/2022 Time	0 - 15 MPH	> 15 - 20 MPH	> 20 - 25 MPH	> 25 - 30 MPH	> 30 - 35 MPH	> 35 - 40 MPH	> 40 - 45 MPH	> 45 - 50 MPH	> 50 - 55 MPH	> 55 - 60 MPH	> 60 - 65 MPH	> 65 - 70 MPH	> 70 MPH	Total
12:00 AM	0	0	0	1	8	9	10	9	3	0	0	0	0	40
1:00	0	0	0	0	6	12	6	3	0	0	0	0	0	27
2:00	0	0	1	1	5	5	5	8	1	0	0	0	0	26
3:00	0	0	0	1	4	12	11	12	5	2	0	0	0	47
4:00	0	0	4	5	24	38	52	42	21	6	1	1	0	194
5:00	0	3	21	33	110	140	91	57	25	2	0	0	0	482
6:00	26	36	47	98	128	115	125	88	19	4	0	0	0	686
7:00	27	20	36	76	143	217	139	72	7	3	0	0	0	740
8:00	18	17	38	74	129	165	168	55	19	1	2	0	0	686
9:00	19	23	38	83	127	159	106	38	6	3	1	0	0	603
10:00	2	9	44	111	141	158	90	46	8	3	0	0	0	612
11:00	39	37	71	90	136	111	55	17	7	2	1	0	0	566
12:00 PM	36	59	57	89	134	127	68	17	1	1	0	0	0	589
1:00	42	28	57	94	146	138	35	15	5	1	0	0	0	561
2:00	49	36	69	111	153	105	33	19	2	0	0	0	0	577
3:00	45	43	72	93	122	123	31	19	3	1	0	0	0	552
4:00	55	22	99	99	169	116	42	14	5	1	0	0	0	622
5:00	84	50	59	109	115	71	51	17	10	1	0	0	0	567
6:00	46	51	65	111	120	106	63	35	6	2	0	0	0	605
7:00	7	22	61	88	153	127	61	30	10	2	0	0	0	561
8:00	2	10	26	102	123	113	52	20	6	0	0	0	0	454
9:00	0	2	11	42	82	78	71	27	11	2	0	0	0	326
10:00	1	0	7	36	92	51	41	16	7	2	1	0	0	254
11:00	0	1	2	12	34	41	46	14	5	2	0	0	0	157
Total	498	469	885	1559	2404	2337	1452	690	192	41	6	1	0	10534

Percentile	15th	50th	85th	95th
Speed	24	34	42	47

Mean Speed (Average)	33.1
10 MPH Pace Speed	30-39
Number in Pace	4725
Percent in Pace	44.9%
Number > 40 MPH	2382
Percent > 40 MPH	22.6%

Location : Route 18 84280001
Location : at Jessica Lane
City/State: Weymouth, MA
Direction: NB,

5/7/2022 Time	0 - 15 MPH	> 15 - 20 MPH	> 20 - 25 MPH	> 25 - 30 MPH	> 30 - 35 MPH	> 35 - 40 MPH	> 40 - 45 MPH	> 45 - 50 MPH	> 50 - 55 MPH	> 55 - 60 MPH	> 60 - 65 MPH	> 65 - 70 MPH	> 70 MPH	Total
12:00 AM	0	0	2	7	22	31	19	14	4	2	0	0	0	101
1:00	0	0	2	9	3	14	13	5	4	1	0	0	0	51
2:00	0	0	0	0	16	9	16	8	2	0	0	0	0	51
3:00	0	0	1	1	3	11	8	7	3	1	0	0	0	35
4:00	0	0	2	4	8	13	22	23	14	4	0	0	0	90
5:00	0	0	0	6	19	50	63	41	22	4	2	2	0	209
6:00	4	3	15	25	74	108	98	42	12	2	1	0	0	384
7:00	0	2	12	33	94	137	85	42	5	0	1	0	0	411
8:00	7	21	34	61	99	121	98	54	7	6	0	0	0	508
9:00	13	28	65	102	157	121	69	34	7	2	0	0	0	598
10:00	45	45	85	123	141	99	50	26	15	0	0	0	0	629
11:00	65	69	88	117	144	94	24	12	2	0	0	0	0	615
12:00 PM	79	56	79	144	142	79	47	20	1	0	0	0	0	647
1:00	57	56	77	116	138	113	44	20	6	0	0	0	0	627
2:00	55	66	102	139	146	117	49	8	2	2	0	0	0	686
3:00	51	39	98	119	145	106	59	14	0	3	0	0	0	634
4:00	35	54	97	90	162	99	43	27	5	1	0	0	0	613
5:00	16	28	32	85	172	154	70	14	7	0	0	0	0	578
6:00	21	26	57	89	163	125	93	17	8	2	0	0	2	603
7:00	10	12	27	80	123	112	87	35	7	2	0	0	0	495
8:00	4	13	30	53	129	90	68	16	5	4	0	0	0	412
9:00	1	3	23	41	99	89	44	14	8	2	0	0	2	326
10:00	0	4	5	37	60	81	42	27	3	5	0	0	0	264
11:00	0	2	5	19	43	45	33	7	2	2	0	0	0	158
Total	463	527	938	1500	2302	2018	1244	527	151	45	4	2	4	9725
			Percentile	15th	50th	85th	95th							
			Speed	23	33	42	47							
			Mean Speed (Average)	32.4										
			10 MPH Pace Speed	30-39										
			Number in Pace	4310										
			Percent in Pace	44.3%										
			Number > 40 MPH	1977										
			Percent > 40 MPH	20.3%										
Grand Total	1374	1464	2783	4675	6946	6573	4124	1876	556	130	19	7	4	30531
Stats			Percentile	15th	50th	85th	95th							
			Speed	24	34	42	47							
			Mean Speed (Average)	32.9										
			10 MPH Pace Speed	30-39										
			Number in Pace	13481										
			Percent in Pace	44.2%										
			Number > 40 MPH	6716										
			Percent > 40 MPH	22.0%										

Location : Route 18 84280001
Location : at Jessica Lane
City/State: Weymouth, MA
Direction: SB,

5/5/2022 Time	0 - 15 MPH	> 15 - 20 MPH	> 20 - 25 MPH	> 25 - 30 MPH	> 30 - 35 MPH	> 35 - 40 MPH	> 40 - 45 MPH	> 45 - 50 MPH	> 50 - 55 MPH	> 55 - 60 MPH	> 60 - 65 MPH	> 65 - 70 MPH	> 70 MPH	Total
12:00 AM	0	0	0	1	3	18	41	22	11	1	0	0	0	97
1:00	0	0	0	0	2	8	14	10	3	2	0	0	0	39
2:00	0	0	0	0	3	8	6	6	0	0	0	0	0	23
3:00	0	0	0	0	5	6	7	3	3	0	0	0	0	24
4:00	0	0	0	1	4	10	20	10	6	0	0	0	0	51
5:00	0	0	0	2	7	44	51	24	3	3	0	0	0	134
6:00	0	0	1	9	30	74	89	73	20	2	4	1	0	303
7:00	1	0	5	13	68	156	130	63	22	5	1	0	0	464
8:00	3	1	8	17	72	169	153	73	12	0	1	0	0	509
9:00	0	2	5	20	110	164	154	52	17	3	0	1	1	529
10:00	4	3	7	16	86	178	177	54	7	1	2	0	0	535
11:00	0	4	10	21	134	226	134	32	9	3	0	0	0	573
12:00 PM	0	3	12	44	175	235	148	41	9	1	0	0	0	668
1:00	0	2	6	47	144	186	111	56	11	1	2	0	0	566
2:00	0	0	5	48	192	222	136	65	13	1	2	0	0	684
3:00	0	3	11	50	238	277	175	60	11	3	2	0	0	830
4:00	4	5	9	47	183	303	212	74	11	2	1	0	0	851
5:00	4	1	10	62	206	285	178	50	8	1	1	0	0	806
6:00	3	0	2	28	145	211	170	78	17	7	1	0	0	662
7:00	1	4	14	45	162	208	147	42	11	6	0	0	0	640
8:00	0	0	2	15	102	166	126	63	7	3	2	0	1	487
9:00	0	0	2	8	68	110	129	44	12	2	0	0	0	375
10:00	0	0	2	5	22	66	83	35	14	4	1	0	0	232
11:00	0	0	0	4	15	75	69	39	5	4	1	0	0	212
Total	20	28	111	503	2176	3405	2660	1069	242	55	21	2	2	10294

Percentile	15th	50th	85th	95th
Speed	32	38	45	48

Mean Speed (Average)	38.6
10 MPH Pace Speed	35-44
Number in Pace	6055
Percent in Pace	58.8%
Number > 40 MPH	4051
Percent > 40 MPH	39.4%

Location : Route 18 84280001
Location : at Jessica Lane
City/State: Weymouth, MA
Direction: SB,

5/6/2022 Time	0 - 15 MPH	> 15 - 20 MPH	> 20 - 25 MPH	> 25 - 30 MPH	> 30 - 35 MPH	> 35 - 40 MPH	> 40 - 45 MPH	> 45 - 50 MPH	> 50 - 55 MPH	> 55 - 60 MPH	> 60 - 65 MPH	> 65 - 70 MPH	> 70 MPH	Total
12:00 AM	0	0	0	0	5	34	26	23	3	3	0	0	0	94
1:00	0	0	0	1	3	28	28	23	2	1	0	0	0	86
2:00	0	0	0	1	5	8	14	9	2	1	0	0	0	40
3:00	0	2	0	0	6	10	10	6	0	1	0	0	0	35
4:00	1	0	1	0	2	15	18	9	4	0	0	0	0	50
5:00	0	0	0	0	11	38	42	13	2	3	1	0	0	110
6:00	0	0	0	5	29	71	116	59	18	4	1	1	0	304
7:00	1	1	3	17	50	160	159	77	13	2	0	0	0	483
8:00	0	2	7	44	100	200	117	42	12	0	0	0	0	524
9:00	0	4	11	25	116	215	152	30	8	1	0	0	0	562
10:00	0	0	5	9	104	213	167	36	12	0	0	0	0	546
11:00	0	2	7	45	141	199	156	53	7	3	0	0	0	613
12:00 PM	0	0	14	28	185	210	133	47	11	3	0	0	0	631
1:00	0	5	12	57	154	251	133	44	6	1	0	0	0	663
2:00	1	7	22	67	187	262	156	35	4	1	1	0	0	743
3:00	11	6	24	60	189	265	164	59	10	2	1	1	1	793
4:00	9	8	15	69	211	320	161	43	12	1	0	1	0	850
5:00	6	0	14	85	211	265	181	48	5	1	0	0	0	816
6:00	0	0	3	76	180	269	160	35	6	1	0	0	0	730
7:00	3	5	5	26	122	240	173	66	16	9	1	0	0	666
8:00	1	0	2	13	96	164	132	51	17	4	0	0	0	480
9:00	0	0	0	7	59	129	146	57	13	1	1	0	0	413
10:00	0	0	0	8	35	109	101	50	4	3	0	0	0	310
11:00	1	0	0	2	28	91	128	52	11	5	1	0	0	319
Total	34	42	145	645	2229	3766	2773	967	198	51	7	3	1	10861

Percentile	15th	50th	85th	95th
Speed	32	38	44	48

Mean Speed (Average)	38.1
10 MPH Pace Speed	35-44
Number in Pace	6528
Percent in Pace	60.1%
Number > 40 MPH	4000
Percent > 40 MPH	36.8%

Location : Route 18 84280001
Location : at Jessica Lane
City/State: Weymouth, MA
Direction: SB,

5/7/2022 Time	0 - 15 MPH	> 15 - 20 MPH	> 20 - 25 MPH	> 25 - 30 MPH	> 30 - 35 MPH	> 35 - 40 MPH	> 40 - 45 MPH	> 45 - 50 MPH	> 50 - 55 MPH	> 55 - 60 MPH	> 60 - 65 MPH	> 65 - 70 MPH	> 70 MPH	Total
12:00 AM	0	0	0	1	10	40	43	41	5	2	1	0	0	143
1:00	0	0	0	0	14	23	31	14	4	1	0	0	0	87
2:00	0	0	0	0	4	10	11	9	2	2	0	0	0	38
3:00	0	0	0	0	3	11	11	9	3	0	0	0	0	37
4:00	0	0	0	0	4	12	8	7	4	0	0	0	0	35
5:00	0	0	1	0	5	19	21	16	2	0	0	0	1	65
6:00	0	0	0	0	14	49	72	39	10	1	0	0	0	185
7:00	0	1	1	10	51	96	114	40	11	4	1	0	0	329
8:00	0	0	4	10	58	131	136	75	21	2	0	0	0	437
9:00	0	1	3	32	90	197	163	59	13	1	0	0	0	559
10:00	1	10	14	30	140	246	124	39	9	3	0	0	0	616
11:00	0	1	11	69	205	249	139	32	10	1	1	0	0	718
12:00 PM	1	0	5	51	247	289	130	36	12	1	0	0	0	772
1:00	0	0	10	48	169	287	153	42	7	5	0	0	0	721
2:00	4	0	8	39	159	286	185	53	9	0	2	0	0	745
3:00	1	3	5	34	175	246	173	53	11	3	0	0	1	705
4:00	2	2	2	20	144	232	169	62	18	3	0	1	0	655
5:00	1	1	6	21	150	224	182	71	13	5	0	0	0	674
6:00	1	0	3	21	104	199	168	75	12	5	1	0	0	589
7:00	0	2	3	16	82	177	192	52	16	2	1	0	0	543
8:00	0	0	0	10	77	155	150	56	11	4	0	0	2	465
9:00	0	0	3	6	43	114	105	65	11	1	2	0	0	350
10:00	0	0	1	4	38	107	94	28	9	6	0	0	0	287
11:00	1	1	0	8	36	99	78	38	3	3	0	0	0	267
Total	12	22	80	430	2022	3498	2652	1011	226	55	9	1	4	10022
			Percentile	15th	50th	85th	95th							
			Speed	33	38	45	48							
			Mean Speed (Average)	38.8										
			10 MPH Pace Speed	35-44										
			Number in Pace	6137										
			Percent in Pace	61.2%										
			Number > 40 MPH	3958										
			Percent > 40 MPH	39.5%										
Grand Total	66	92	336	1578	6427	10669	8085	3047	666	161	37	6	7	31177
Stats			Percentile	15th	50th	85th	95th							
			Speed	33	38	44	48							
			Mean Speed (Average)	38.5										
			10 MPH Pace Speed	35-44										
			Number in Pace	18721										
			Percent in Pace	60.0%										
			Number > 40 MPH	12009										
			Percent > 40 MPH	38.5%										

Location : Route 18 84280001
Location : at Jessica Lane
City/State: Weymouth, MA
Direction: Combined

5/5/2022 Time	0 - 15 MPH	> 15 - 20 MPH	> 20 - 25 MPH	> 25 - 30 MPH	> 30 - 35 MPH	> 35 - 40 MPH	> 40 - 45 MPH	> 45 - 50 MPH	> 50 - 55 MPH	> 55 - 60 MPH	> 60 - 65 MPH	> 65 - 70 MPH	> 70 MPH	Total
12:00 AM	0	0	1	1	11	30	52	26	11	1	0	0	0	133
1:00	1	0	0	2	5	13	24	13	4	2	0	0	0	64
2:00	0	0	0	2	9	16	14	9	1	0	0	0	0	51
3:00	0	0	0	0	10	18	18	14	7	4	0	0	0	71
4:00	0	1	4	9	24	59	59	64	32	7	2	0	0	261
5:00	1	13	21	39	79	165	179	90	39	13	1	0	0	640
6:00	28	22	59	93	133	226	238	156	53	12	5	1	0	1026
7:00	39	25	72	104	227	336	242	109	36	7	1	1	0	1199
8:00	34	39	79	109	187	305	275	124	28	1	3	0	0	1184
9:00	17	14	53	99	240	319	243	90	29	4	0	1	1	1110
10:00	16	19	37	91	222	314	275	109	13	1	5	0	0	1102
11:00	23	25	74	120	262	364	185	45	18	3	0	0	0	1119
12:00 PM	35	56	71	159	293	357	196	68	12	1	0	0	0	1248
1:00	49	65	58	174	275	290	147	82	18	3	2	0	0	1163
2:00	33	36	80	145	325	319	197	88	18	2	2	0	0	1245
3:00	26	41	71	162	386	395	244	78	14	4	2	0	0	1423
4:00	32	26	94	149	332	404	272	90	13	2	1	0	0	1415
5:00	36	39	90	197	370	390	223	61	13	3	1	0	0	1423
6:00	46	38	95	153	261	318	241	98	19	7	1	0	0	1277
7:00	9	21	51	140	294	335	205	66	22	6	0	0	0	1149
8:00	8	12	41	81	215	247	179	81	8	4	2	1	1	880
9:00	0	3	10	51	152	176	167	59	16	2	0	0	0	636
10:00	0	0	5	29	72	123	123	56	25	6	1	2	0	442
11:00	0	1	5	10	32	104	90	52	6	4	1	0	0	305
Total	433	496	1071	2119	4416	5623	4088	1728	455	99	30	6	2	20566

Percentile	15th	50th	85th	95th
Speed	28	37	43	48

Mean Speed (Average)	35.9
10 MPH Pace Speed	31-40
Number in Pace	9980
Percent in Pace	48.5%
Number > 40 MPH	6408
Percent > 40 MPH	31.2%

Location : Route 18 84280001
Location : at Jessica Lane
City/State: Weymouth, MA
Direction: Combined

5/6/2022 Time	0 - 15 MPH	> 15 - 20 MPH	> 20 - 25 MPH	> 25 - 30 MPH	> 30 - 35 MPH	> 35 - 40 MPH	> 40 - 45 MPH	> 45 - 50 MPH	> 50 - 55 MPH	> 55 - 60 MPH	> 60 - 65 MPH	> 65 - 70 MPH	> 70 MPH	Total
12:00 AM	0	0	0	1	13	43	36	32	6	3	0	0	0	134
1:00	0	0	0	1	9	40	34	26	2	1	0	0	0	113
2:00	0	0	1	2	10	13	19	17	3	1	0	0	0	66
3:00	0	2	0	1	10	22	21	18	5	3	0	0	0	82
4:00	1	0	5	5	26	53	70	51	25	6	1	1	0	244
5:00	0	3	21	33	121	178	133	70	27	5	1	0	0	592
6:00	26	36	47	103	157	186	241	147	37	8	1	1	0	990
7:00	28	21	39	93	193	377	298	149	20	5	0	0	0	1223
8:00	18	19	45	118	229	365	285	97	31	1	2	0	0	1210
9:00	19	27	49	108	243	374	258	68	14	4	1	0	0	1165
10:00	2	9	49	120	245	371	257	82	20	3	0	0	0	1158
11:00	39	39	78	135	277	310	211	70	14	5	1	0	0	1179
12:00 PM	36	59	71	117	319	337	201	64	12	4	0	0	0	1220
1:00	42	33	69	151	300	389	168	59	11	2	0	0	0	1224
2:00	50	43	91	178	340	367	189	54	6	1	1	0	0	1320
3:00	56	49	96	153	311	388	195	78	13	3	1	1	1	1345
4:00	64	30	114	168	380	436	203	57	17	2	0	1	0	1472
5:00	90	50	73	194	326	336	232	65	15	2	0	0	0	1383
6:00	46	51	68	187	300	375	223	70	12	3	0	0	0	1335
7:00	10	27	66	114	275	367	234	96	26	11	1	0	0	1227
8:00	3	10	28	115	219	277	184	71	23	4	0	0	0	934
9:00	0	2	11	49	141	207	217	84	24	3	1	0	0	739
10:00	1	0	7	44	127	160	142	66	11	5	1	0	0	564
11:00	1	1	2	14	62	132	174	66	16	7	1	0	0	476
Total	532	511	1030	2204	4633	6103	4225	1657	390	92	13	4	1	21395

Percentile	15th	50th	85th	95th
Speed	28	37	43	47

Mean Speed (Average)	35.6
10 MPH Pace Speed	31-40
Number in Pace	10663
Percent in Pace	49.8%
Number > 40 MPH	6382
Percent > 40 MPH	29.8%

Location : Route 18 84280001
Location : at Jessica Lane
City/State: Weymouth, MA
Direction: Combined

5/7/2022 Time	0 - 15 MPH	> 15 - 20 MPH	> 20 - 25 MPH	> 25 - 30 MPH	> 30 - 35 MPH	> 35 - 40 MPH	> 40 - 45 MPH	> 45 - 50 MPH	> 50 - 55 MPH	> 55 - 60 MPH	> 60 - 65 MPH	> 65 - 70 MPH	> 70 MPH	Total
12:00 AM	0	0	2	8	32	71	62	55	9	4	1	0	0	244
1:00	0	0	2	9	17	37	44	19	8	2	0	0	0	138
2:00	0	0	0	0	20	19	27	17	4	2	0	0	0	89
3:00	0	0	1	1	6	22	19	16	6	1	0	0	0	72
4:00	0	0	2	4	12	25	30	30	18	4	0	0	0	125
5:00	0	0	1	6	24	69	84	57	24	4	2	2	1	274
6:00	4	3	15	25	88	157	170	81	22	3	1	0	0	569
7:00	0	3	13	43	145	233	199	82	16	4	2	0	0	740
8:00	7	21	38	71	157	252	234	129	28	8	0	0	0	945
9:00	13	29	68	134	247	318	232	93	20	3	0	0	0	1157
10:00	46	55	99	153	281	345	174	65	24	3	0	0	0	1245
11:00	65	70	99	186	349	343	163	44	12	1	1	0	0	1333
12:00 PM	80	56	84	195	389	368	177	56	13	1	0	0	0	1419
1:00	57	56	87	164	307	400	197	62	13	5	0	0	0	1348
2:00	59	66	110	178	305	403	234	61	11	2	2	0	0	1431
3:00	52	42	103	153	320	352	232	67	11	6	0	0	1	1339
4:00	37	56	99	110	306	331	212	89	23	4	0	1	0	1268
5:00	17	29	38	106	322	378	252	85	20	5	0	0	0	1252
6:00	22	26	60	110	267	324	261	92	20	7	1	0	2	1192
7:00	10	14	30	96	205	289	279	87	23	4	1	0	0	1038
8:00	4	13	30	63	206	245	218	72	16	8	0	0	2	877
9:00	1	3	26	47	142	203	149	79	19	3	2	0	2	676
10:00	0	4	6	41	98	188	136	55	12	11	0	0	0	551
11:00	1	3	5	27	79	144	111	45	5	5	0	0	0	425
Total	475	549	1018	1930	4324	5516	3896	1538	377	100	13	3	8	19747
			Percentile	15th	50th	85th	95th							
			Speed	28	36	43	47							
			Mean Speed (Average)	35.7										
			10 MPH Pace Speed	30-39										
			Number in Pace	9768										
			Percent in Pace	49.5%										
			Number > 40 MPH	5935										
			Percent > 40 MPH	30.1%										
Grand Total	1440	1556	3119	6253	13373	17242	12209	4923	1222	291	56	13	11	61708
Stats			Percentile	15th	50th	85th	95th							
			Speed	28	37	43	48							
			Mean Speed (Average)	35.7										
			10 MPH Pace Speed	31-40										
			Number in Pace	30405										
			Percent in Pace	49.3%										
			Number > 40 MPH	18725										
			Percent > 40 MPH	30.3%										

MASSDOT CRASH RATE WORKSHEETS AND HIGH CRASH LOCATION MAP

INTERSECTION CRASH RATE WORKSHEET

CITY/TOWN : Weymouth COUNT DATE : Nov-19

DISTRICT : 6 UNSIGNALIZED : SIGNALIZED : X

~ INTERSECTION DATA ~

MAJOR STREET : Main Street

MINOR STREET(S) : Trotter Road

INTERSECTION DIAGRAM (Label Approaches)

North

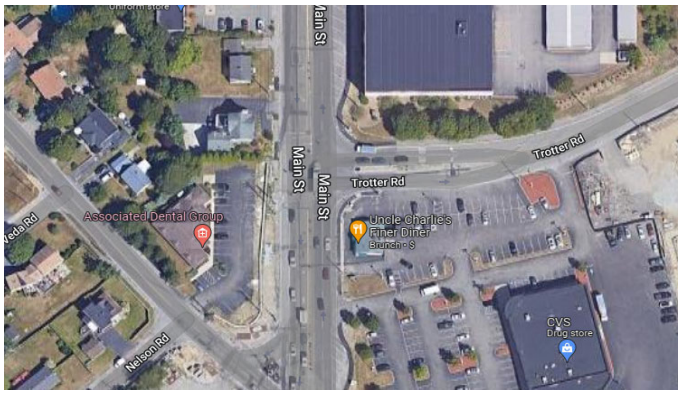

PEAK HOUR VOLUMES

APPROACH :	1	2	3	4	5	Total Peak Hourly Approach Volume
DIRECTION :	EB	WB	NB	SB		
PEAK HOURLY VOLUMES (PM) :		371	890	1,118		2,379

" K " FACTOR : **0.090** INTERSECTION ADT (**V**) = TOTAL DAILY APPROACH VOLUME : **26,433**

TOTAL # OF CRASHES : 18 # OF YEARS : 5 AVERAGE # OF CRASHES PER YEAR (**A**) : **3.60**

CRASH RATE CALCULATION : 0.37

$$\text{RATE} = \frac{(A * 1{,}000{,}000)}{(V * 365)}$$

Comments : Below MassDOT District and Statewide

Project Title & Date: 8428 - Weymouth

INTERSECTION CRASH RATE WORKSHEET

CITY/TOWN : Weymouth COUNT DATE : Nov-19

DISTRICT : 6 UNSIGNALIZED : SIGNALIZED : X

~ INTERSECTION DATA ~

MAJOR STREET : Main Street

MINOR STREET(S) : Pond Street

INTERSECTION DIAGRAM
(Label Approaches)

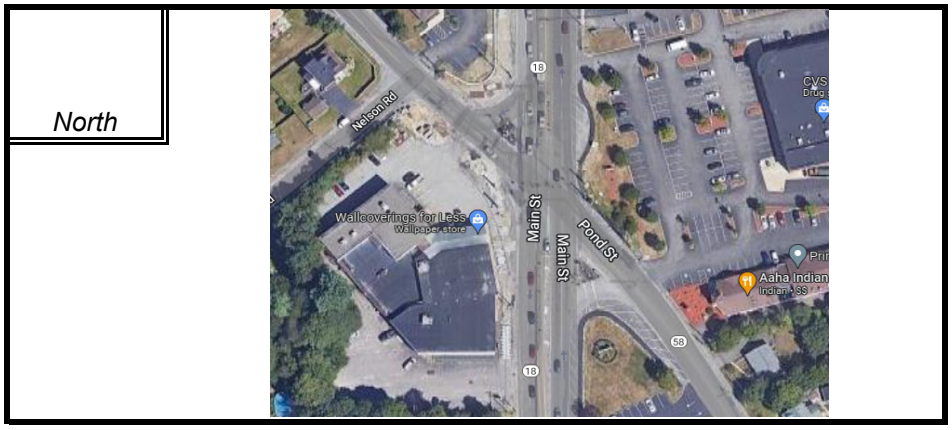

PEAK HOUR VOLUMES

APPROACH :	1	2	3	4	5	Total Peak Hourly Approach Volume
DIRECTION :	EB	WB	NB	SB		
PEAK HOURLY VOLUMES (PM) :	457	363	725	1,257		2,802

" K " FACTOR : **0.090** INTERSECTION ADT (**V**) = TOTAL DAILY APPROACH VOLUME : **31,133**

TOTAL # OF CRASHES : 37 # OF YEARS : 5 AVERAGE # OF CRASHES PER YEAR (**A**) : **7.40**

CRASH RATE CALCULATION : 0.65

$$\text{RATE} = \frac{(A * 1{,}000{,}000)}{(V * 365)}$$

Comments : Below MassDOT District and Statewide

Project Title & Date: 8428 - Weymouth

INTERSECTION CRASH RATE WORKSHEET

CITY/TOWN : Weymouth COUNT DATE : Nov-19

DISTRICT : 6 UNSIGNALIZED : X SIGNALIZED :

~ INTERSECTION DATA ~

MAJOR STREET : Main Street

MINOR STREET(S) : Project Site Driveway

INTERSECTION DIAGRAM
(Label Approaches)

North

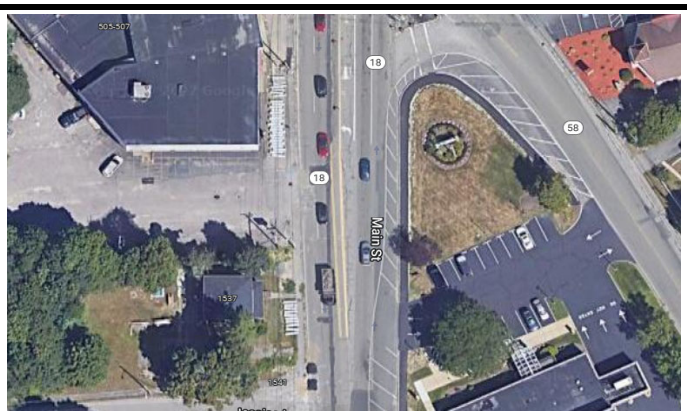

PEAK HOUR VOLUMES

APPROACH :	1	2	3	4	5	Total Peak Hourly Approach Volume
DIRECTION :	EB	WB	NB	SB		
PEAK HOURLY VOLUMES (PM) :	0	0	725	1,042		**1,767**

" K " FACTOR : **0.090**

INTERSECTION ADT (**V**) = TOTAL DAILY APPROACH VOLUME : **19,633**

TOTAL # OF CRASHES : 6

OF YEARS : 5

AVERAGE # OF CRASHES PER YEAR (**A**) : **1.20**

CRASH RATE CALCULATION : 0.17

$$\text{RATE} = \frac{(A * 1{,}000{,}000)}{(V * 365)}$$

Comments : Below MassDOT District and Statewide

Project Title & Date: 8428 - Weymouth

INTERSECTION CRASH RATE WORKSHEET

CITY/TOWN : Weymouth COUNT DATE : Nov-19

DISTRICT : 6 UNSIGNALIZED : X SIGNALIZED :

~ INTERSECTION DATA ~

MAJOR STREET : Pond Street

MINOR STREET(S) : Project Site Driveway

INTERSECTION DIAGRAM
(Label Approaches)

North

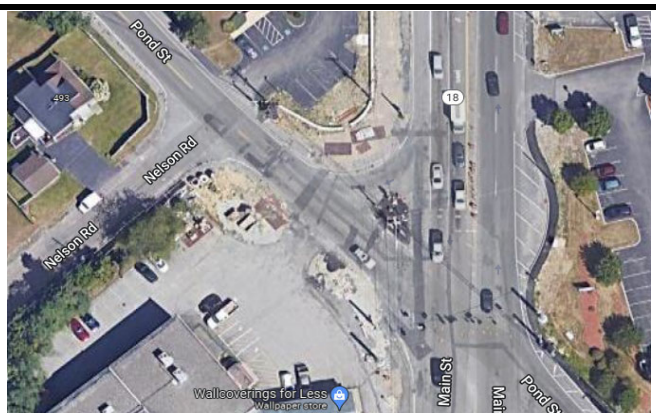

PEAK HOUR VOLUMES

APPROACH :	1	2	3	4	5	Total Peak Hourly Approach Volume
DIRECTION :	EB	WB	NB	SB		
PEAK HOURLY VOLUMES (PM) :	457	294	0	0		**751**

" K " FACTOR : **0.090**

INTERSECTION ADT (**V**) = TOTAL DAILY APPROACH VOLUME : **8,344**

TOTAL # OF CRASHES : 5

OF YEARS : 5

AVERAGE # OF CRASHES PER YEAR (**A**) : **1.00**

CRASH RATE CALCULATION : 0.33

$$\text{RATE} = \frac{(A * 1{,}000{,}000)}{(V * 365)}$$

Comments : Below MassDOT District and Statewide

Project Title & Date: 8428 - Weymouth

INTERSECTION CRASH RATE WORKSHEET

CITY/TOWN : Weymouth COUNT DATE : May-22

DISTRICT : 6 UNSIGNALIZED : X SIGNALIZED :

~ INTERSECTION DATA ~

MAJOR STREET : Main Street

MINOR STREET(S) : Jessica Lane

INTERSECTION DIAGRAM
(Label Approaches)

North

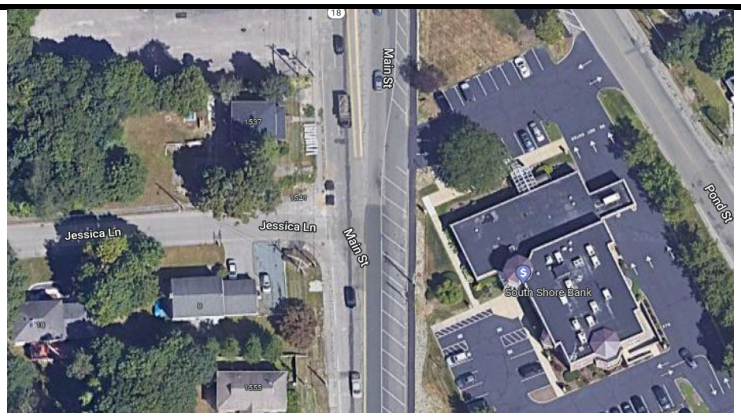

PEAK HOUR VOLUMES

APPROACH :	1	2	3	4	5	Total Peak Hourly Approach Volume
DIRECTION :	EB	WB	NB	SB		
PEAK HOURLY VOLUMES (PM) :	4	0	726	1,042		**1,772**

" K " FACTOR : **0.090** INTERSECTION ADT (**V**) = TOTAL DAILY APPROACH VOLUME : **19,689**

TOTAL # OF CRASHES : 10 # OF YEARS : 5 AVERAGE # OF CRASHES PER YEAR (**A**) : **2.00**

CRASH RATE CALCULATION : 0.28

$$\text{RATE} = \frac{(A * 1{,}000{,}000)}{(V * 365)}$$

Comments : Below MassDOT District and Statewide

Project Title & Date: 8428 - Weymouth

massDOT Massachusetts Department of Transportation

Top Crash Locations

Accessible Version

Find address or place

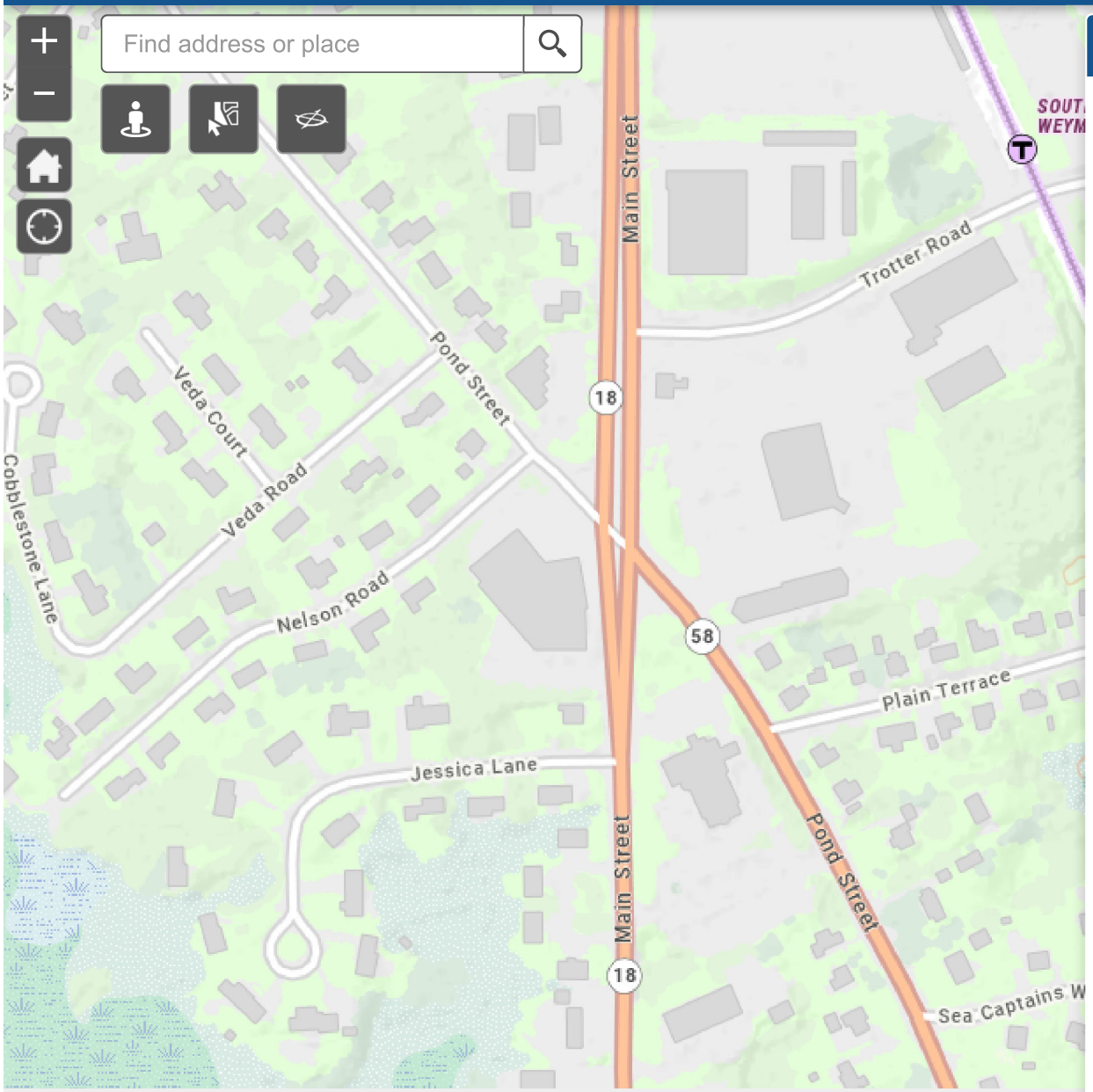

Legend

Crash Clusters

Top 200 Crash Clusters 2017-2019

2017-2019 HSIP Cluster

2010-2019 HSIP Bicycle Cluster

2010-2019 HSIP Pedestrian Cluster

App State

Click to restore the map extent and layers visibility where you left off.

GENERAL BACKGROUND TRAFFIC GROWTH

General Background Traffic Growth - Daily Traffic Volumes

CITY/TOWN	ROUTE/STREET	LOCATION	2008	2009	2010	2011	2012	2013	2014	2015	2016	2017	2018	Annual Growth Rate
Weymouth	Route 3	North of Route 18	129,015	139,494	134,418	131,978	132,053	131,271	132,623	127,190	133245	133,570	133,238	**-0.02%**

BACKGROUND DEVELOPMENT TRAFFIC-VOLUME NETWORKS

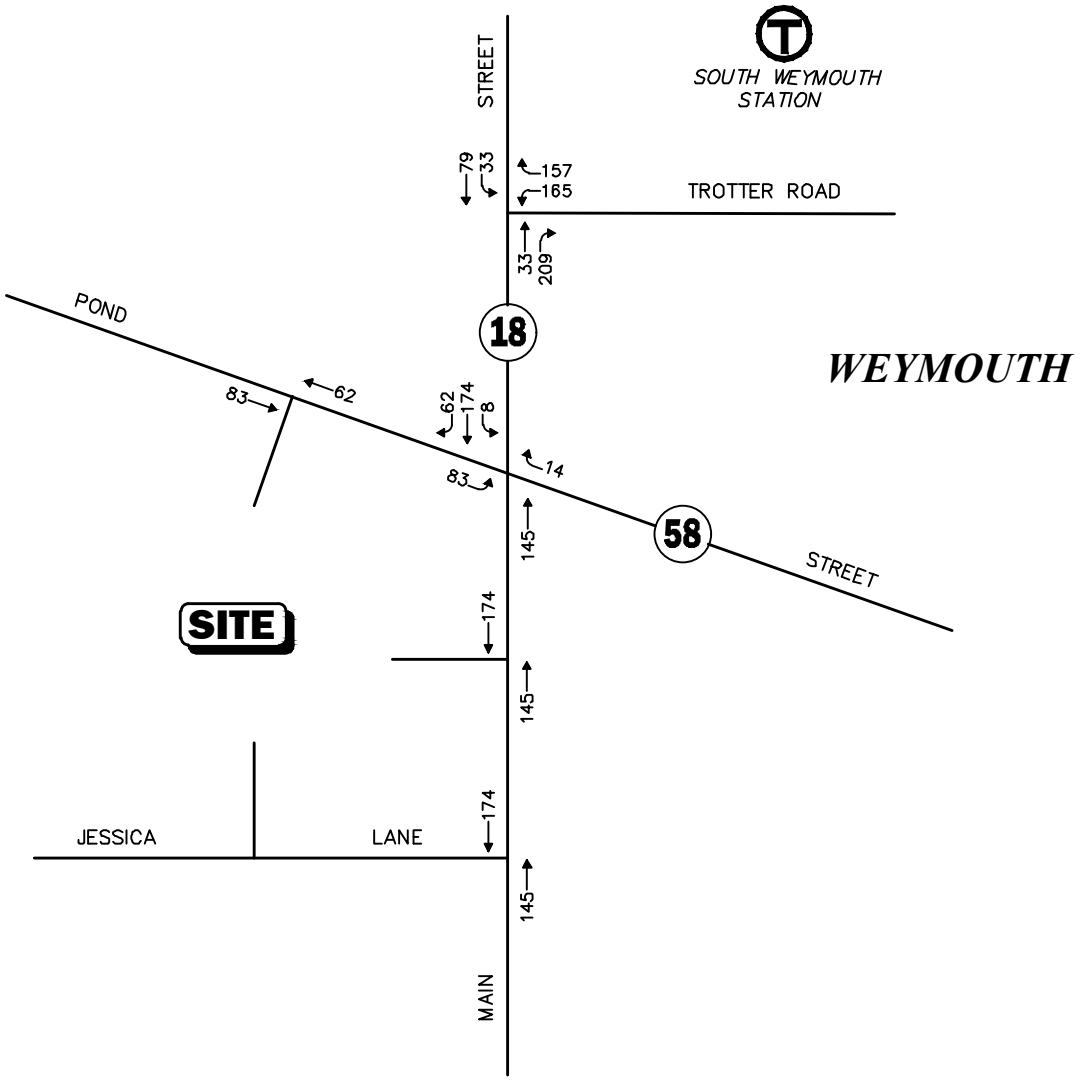

Not To Scale

Figure A-1

Union Point Phase I
Weekday Morning
Peak-Hour Traffic Volumes

Vanasse & Associates inc

Copyright © 2022 by VAi. All Rights Reserved.

R:\8428\8428NT2.dwg, 6/24/2022 11:27:42 AM

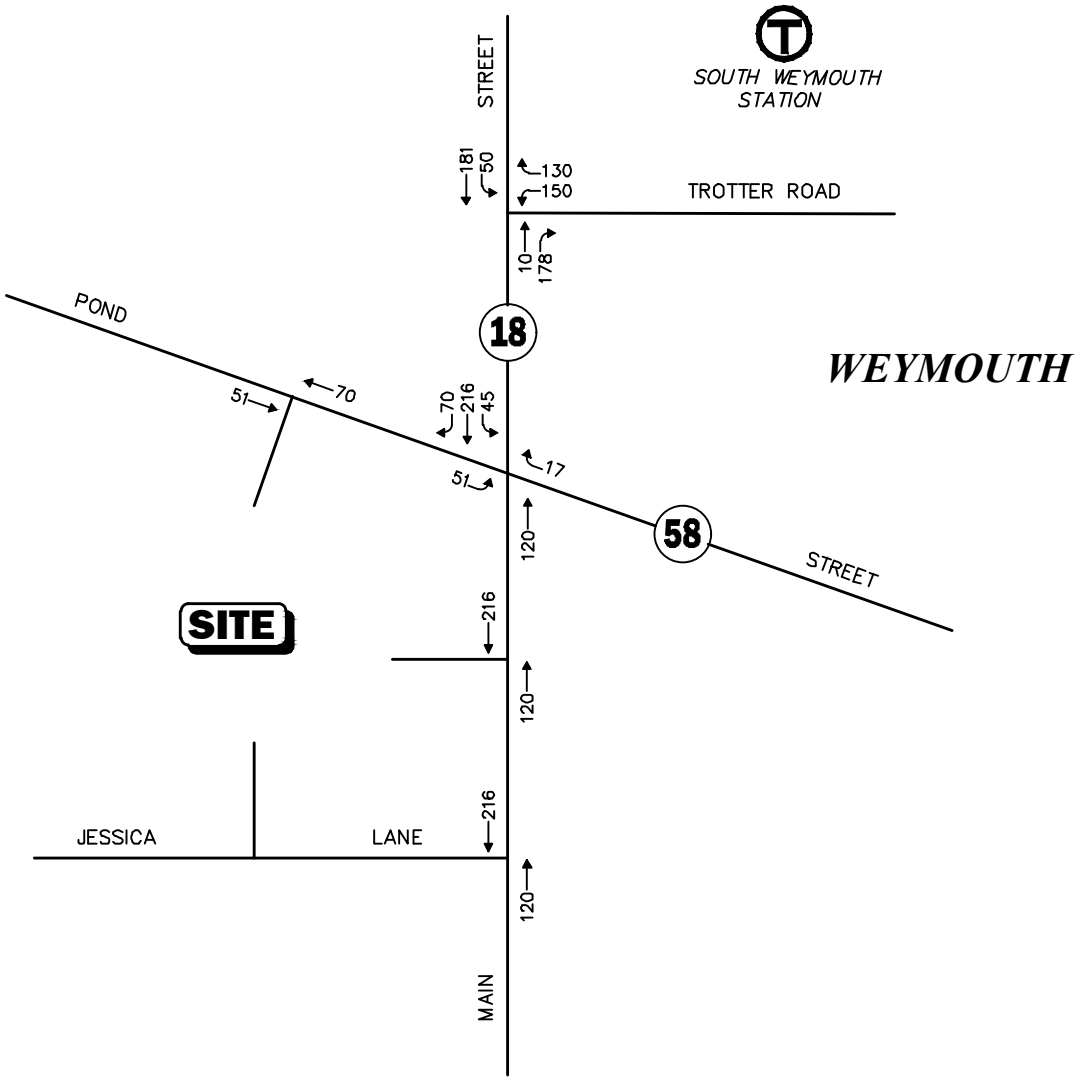

Not To Scale

Figure A-2

Union Point Phase I
Weekday Evening
Peak-Hour Traffic Volumes

Vanasse & Associates inc

Copyright © 2022 by VAi. All Rights Reserved.

R:\8428\8428NT2.dwg, 6/24/2022 11:27:56 AM

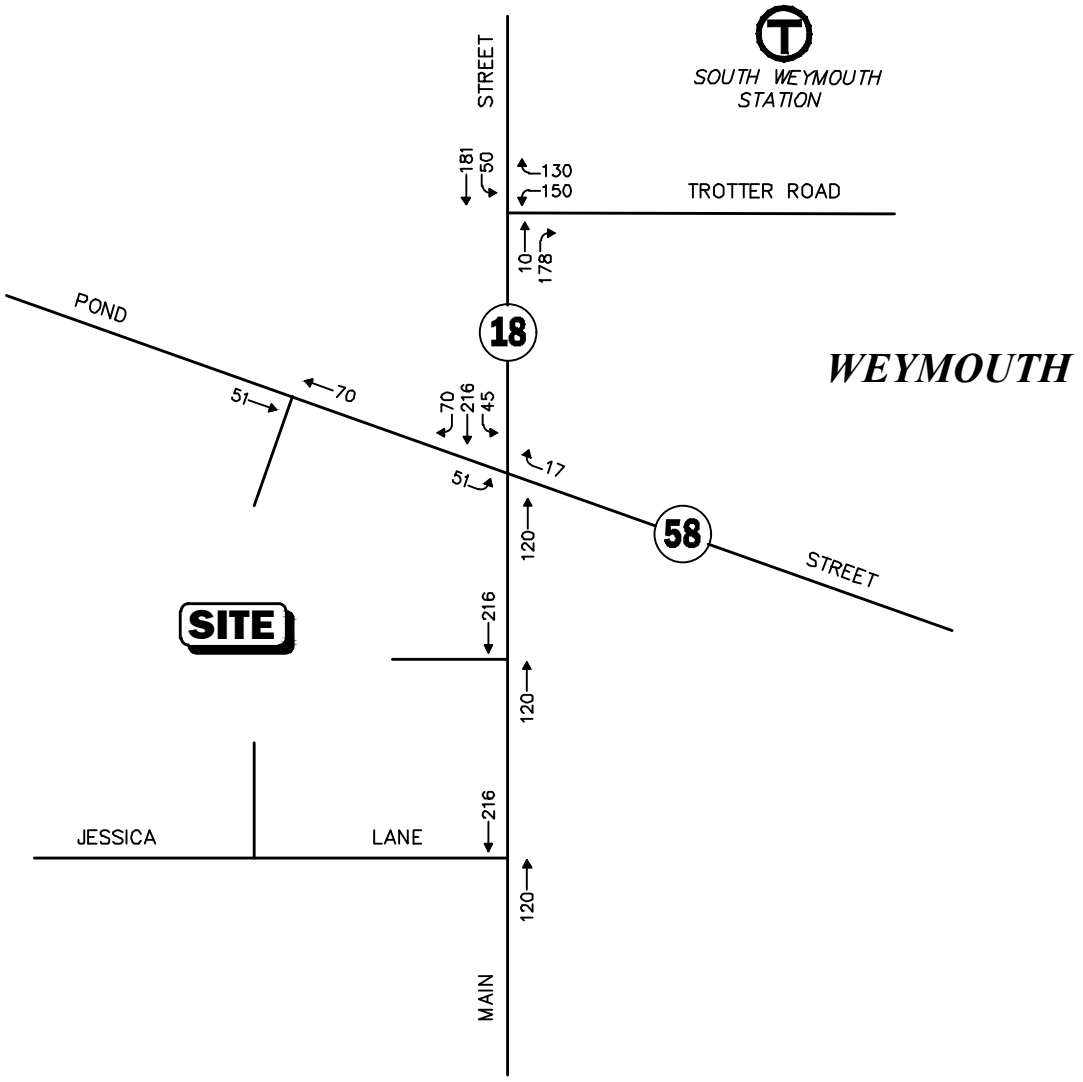

Not To Scale

Figure A-3

Union Point Phase I
Saturday Midday
Peak-Hour Traffic Volumes

Vanasse & Associates inc

Copyright © 2022 by VAi. All Rights Reserved.

R:\8428\8428NT2.dwg, 6/24/2022 11:28:03 AM

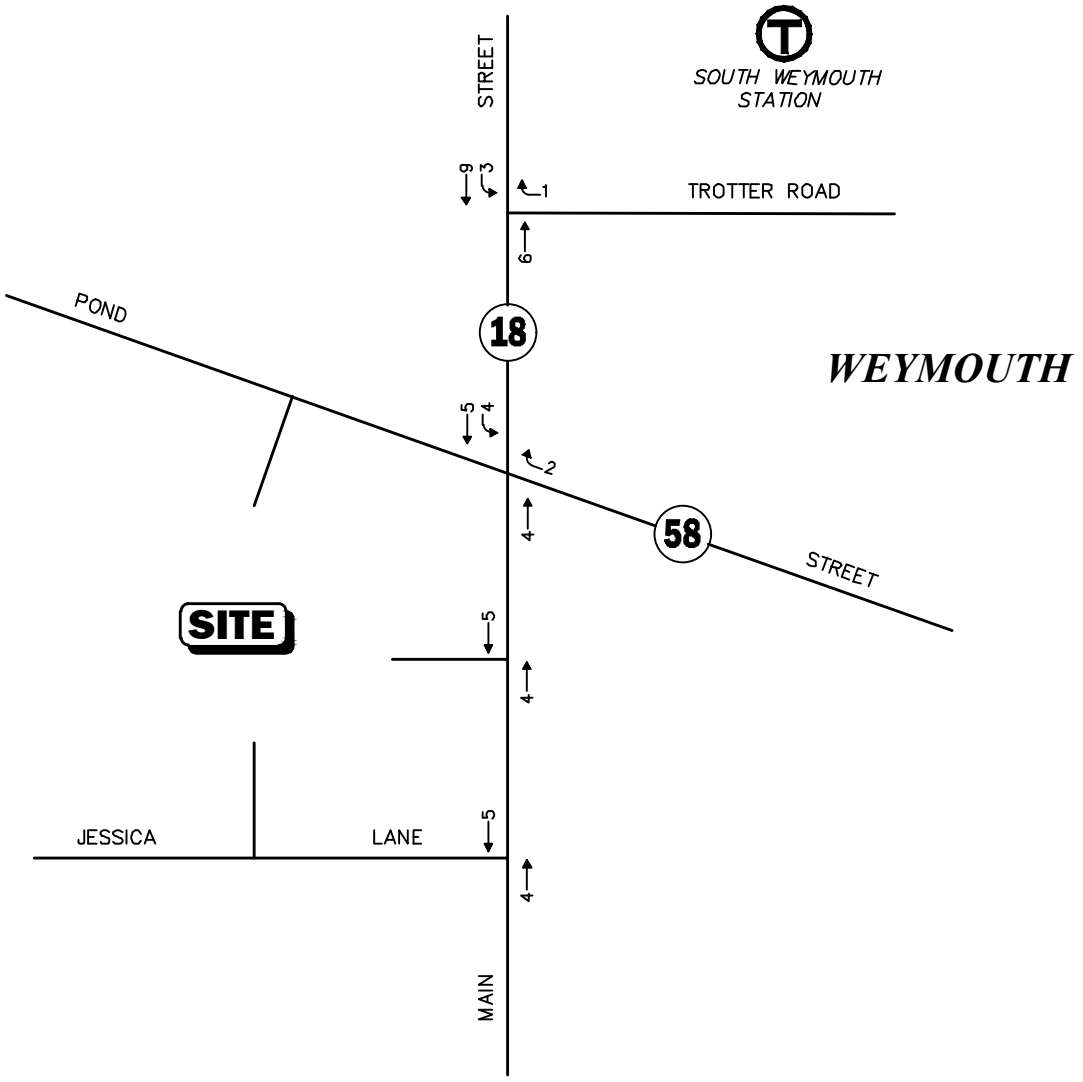

Not To Scale

Figure A-4

Colony Station
Weekday Morning
Peak-Hour Traffic Volumes

Vanasse & Associates inc

Copyright © 2022 by VAi. All Rights Reserved.

R:\8428\8428NT2.dwg, 6/24/2022 11:28:11 AM

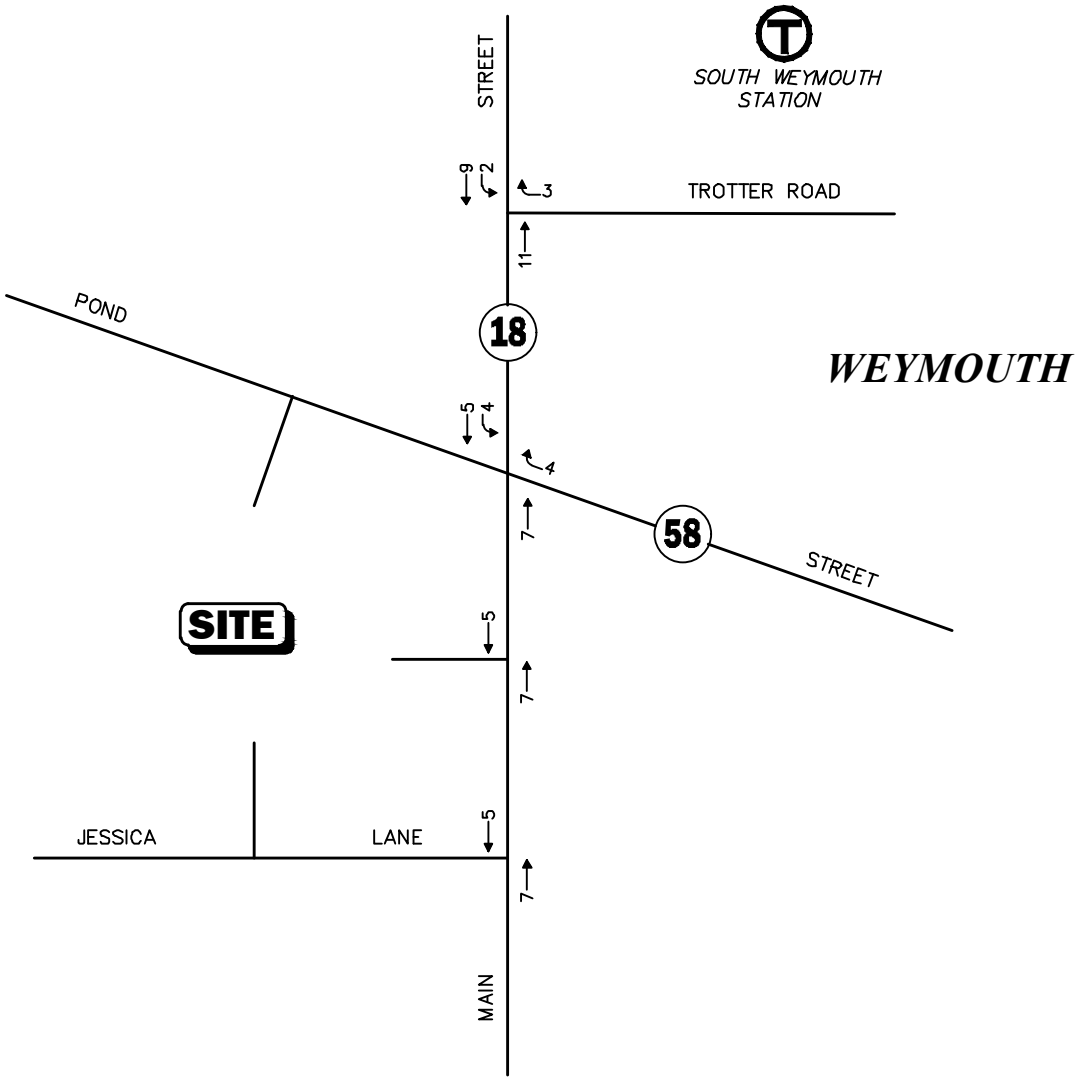

Not To Scale

Figure A-5

Colony Station
Weekday Evening
Peak-Hour Traffic Volumes

Vanasse & Associates inc

Copyright © 2022 by VAi. All Rights Reserved.

R:\8428\8428NT2.dwg, 6/24/2022 11:28:19 AM

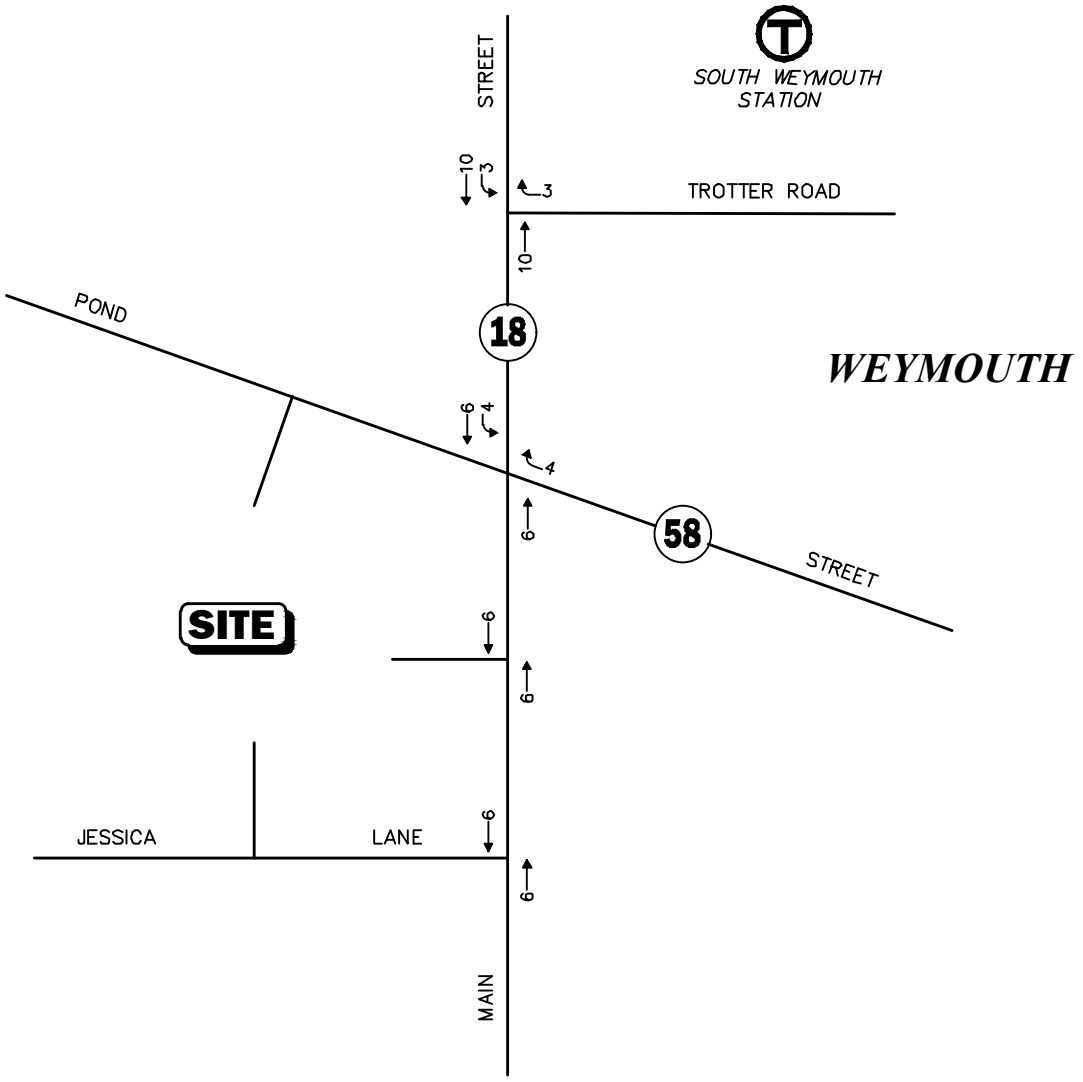

Not To Scale

Vanasse & Associates inc

Figure A-6

Colony Station
Saturday Midday
Peak-Hour Traffic Volumes

Copyright © 2022 by VAi. All Rights Reserved.

R:\8428\8428NT2.dwg, 6/24/2022 11:28:27 AM

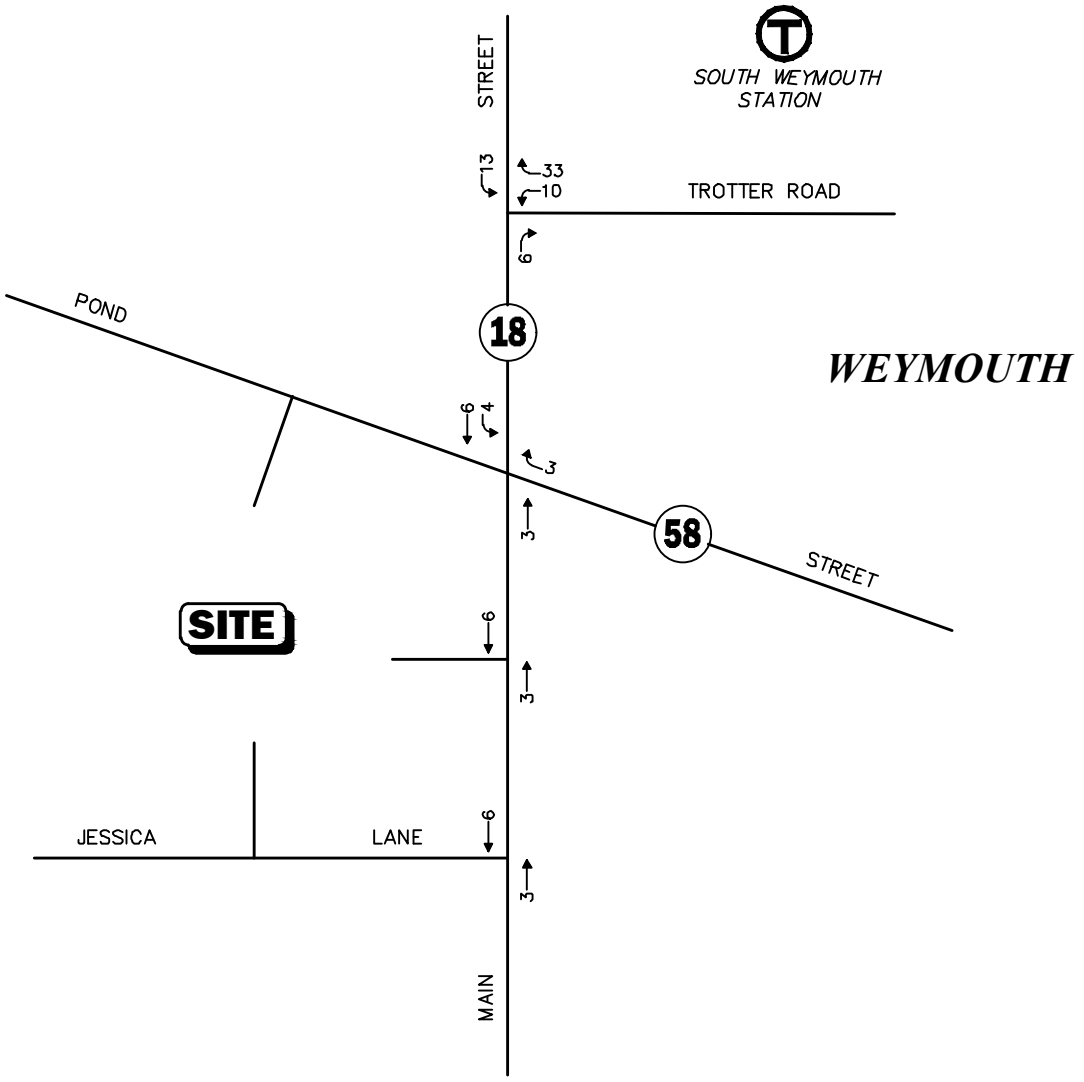

Not To Scale

Figure A-7

1500 Main Street
Weekday Morning
Peak-Hour Traffic Volumes

Vanasse & Associates inc

Copyright © 2022 by VAi. All Rights Reserved.

R:\8428\8428NT2.dwg, 6/24/2022 11:28:34 AM

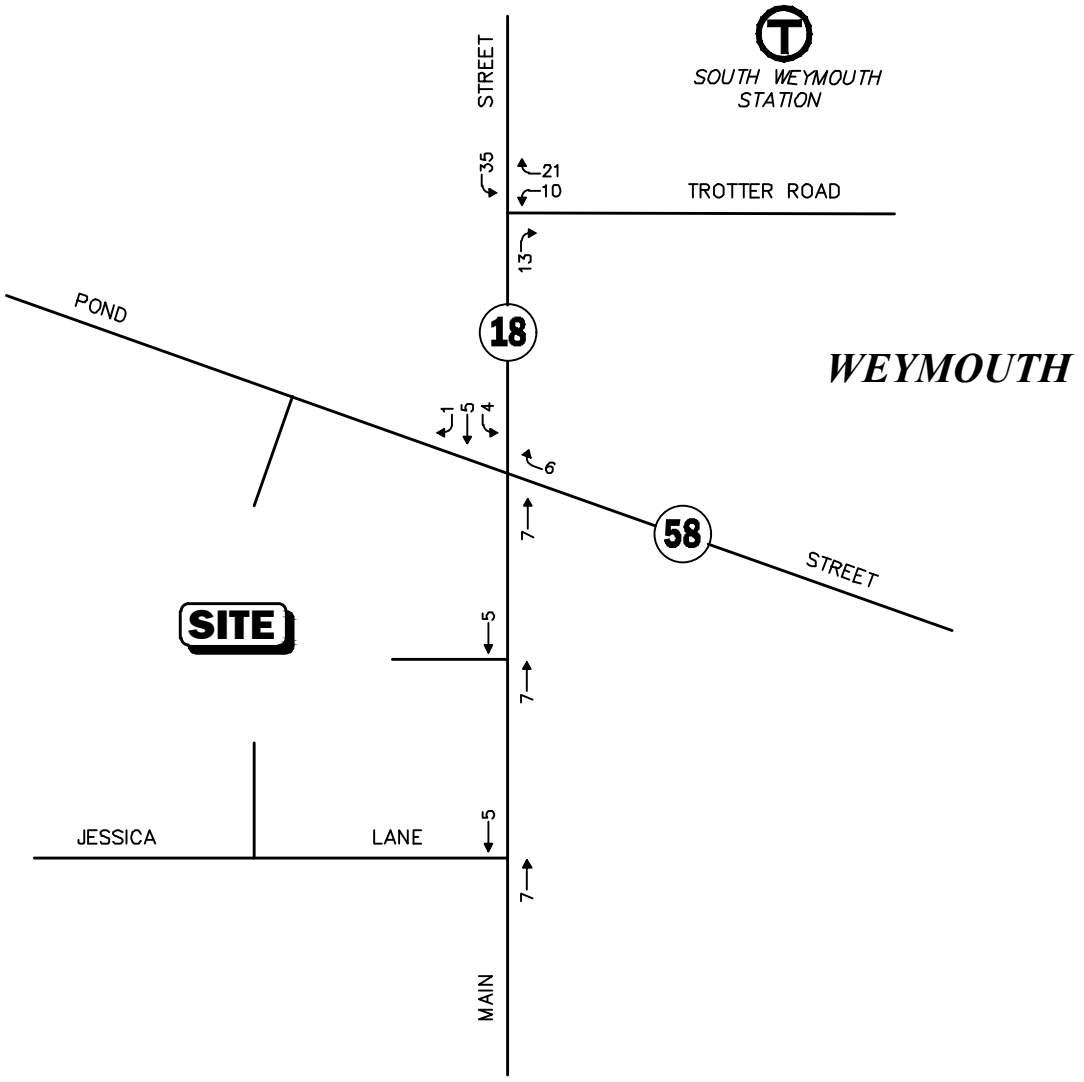

Not To Scale

Figure A-8

1500 Main Street
Weekday Evening
Peak-Hour Traffic Volumes

Vanasse & Associates inc

Copyright © 2022 by VAi. All Rights Reserved.

R:\8428\8428NT2.dwg, 6/24/2022 11:28:42 AM

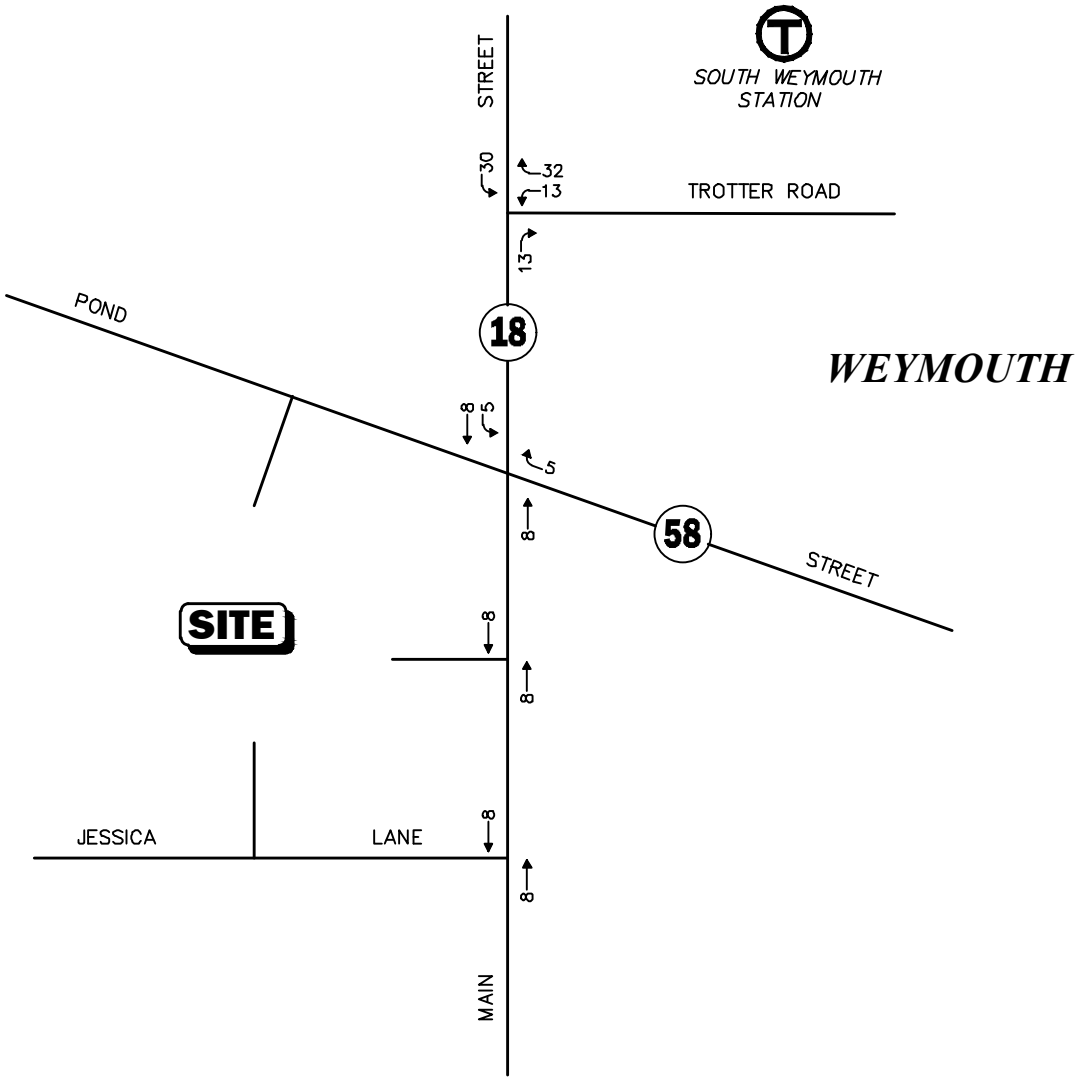

Not To Scale

Figure A-9

1500 Main Street
Saturday Midday
Peak-Hour Traffic Volumes

Vanasse & Associates inc

Copyright © 2022 by VAi. All Rights Reserved.

R:\8428\8428NT2.dwg, 6/24/2022 11:28:49 AM

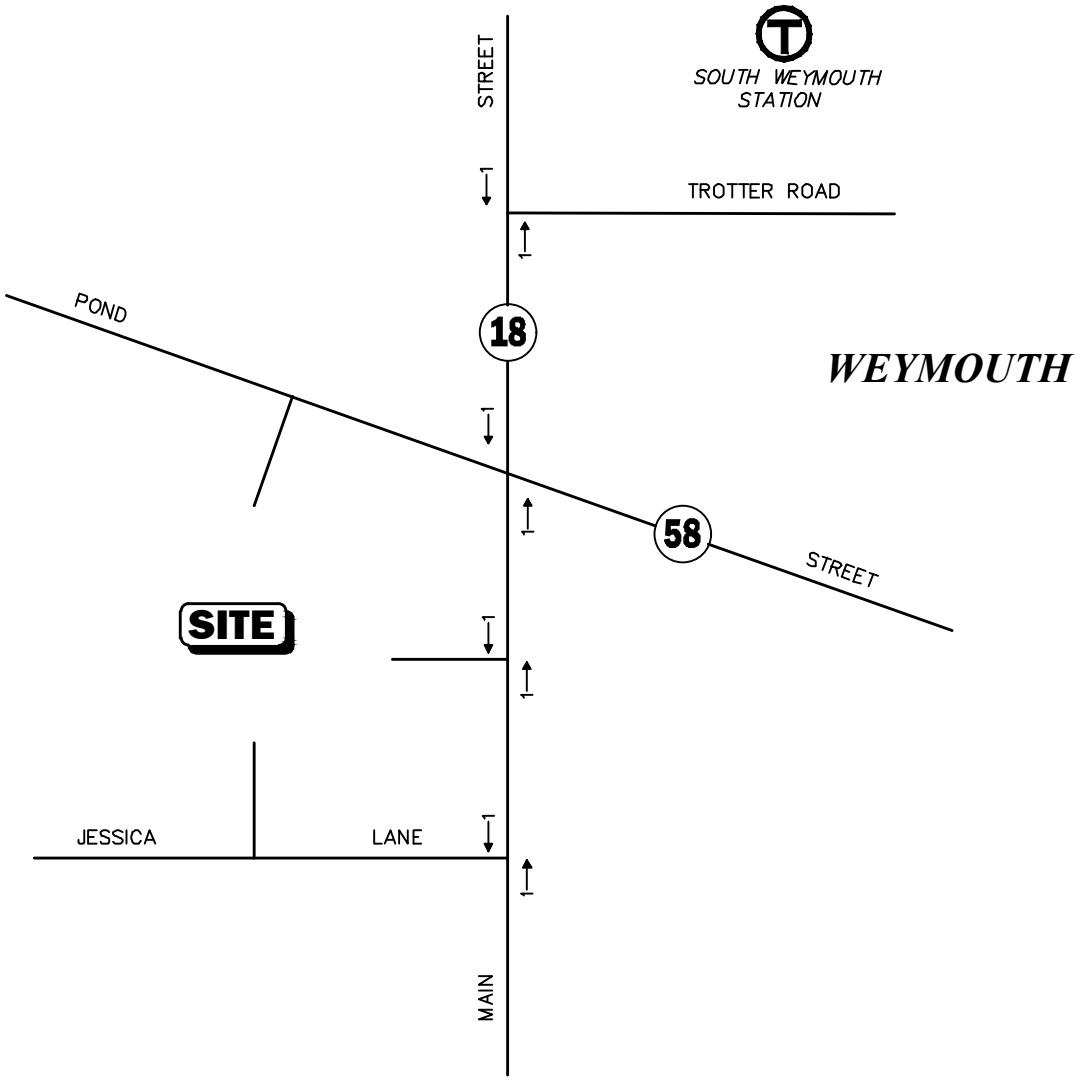

Not To Scale

Figure A-10

20-Unit Residential Community
Weekday Morning
Peak-Hour Traffic Volumes

Vanasse & Associates inc

Copyright © 2022 by VAi. All Rights Reserved.

R:\8428\8428NT2.dwg, 6/24/2022 11:28:58 AM

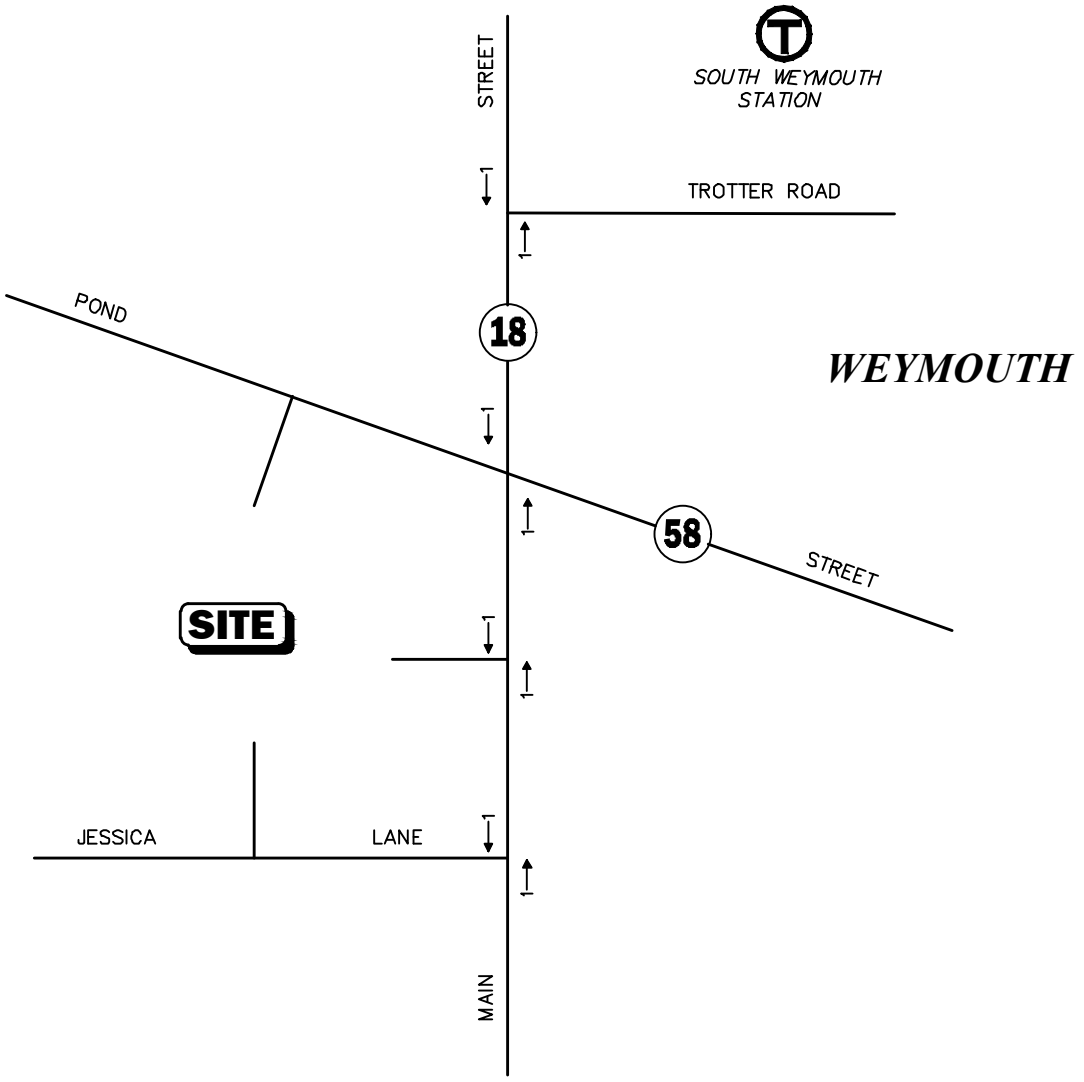

Not To Scale

Figure A-11

20-Unit Residential Community
Weekday Evening
Peak-Hour Traffic Volumes

Vanasse & Associates inc

Copyright © 2022 by VAi. All Rights Reserved.

R:\8428\8428NT2.dwg, 6/24/2022 11:29:06 AM

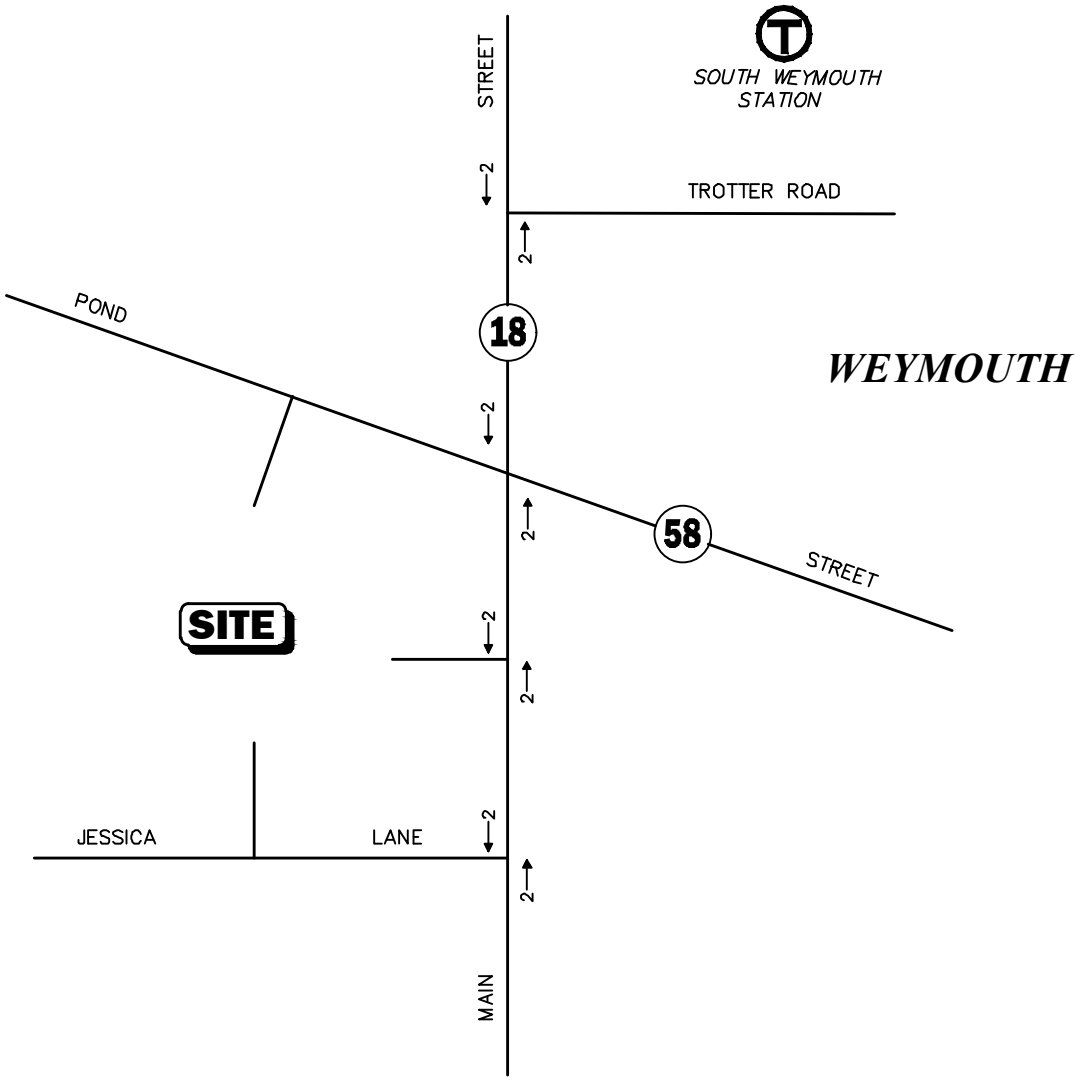

Not To Scale

Figure A-12

20-Unit Residential Community
Saturday Midday
Peak-Hour Traffic Volumes

Vanasse & Associates inc

Copyright © 2022 by VAi. All Rights Reserved.

R:\8428\8428NT2.dwg, 6/24/2022 11:29:14 AM

TRIP-GENERATION CALCULATIONS

Graph Look Up

Query | Filter

DATA SOURCE:
Trip Generation Manual, 11th Ed

SEARCH BY LAND USE CODE:
822

LAND USE GROUP:
(800-899) Retail

LAND USE :
822 - Strip Retail Plaza (<40k)

LAND USE SUBCATEGORY:
All Sites

SETTING/LOCATION:
General Urban/Suburban

INDEPENDENT VARIABLE (IV):
1000 Sq. Ft. GLA

TIME PERIOD:
Weekday

TRIP TYPE:
Vehicle

ENTER IV VALUE TO CALCULATE TRIPS:
10.7 Calculate

Data Plot and Equation

Caution – Small Sample Size

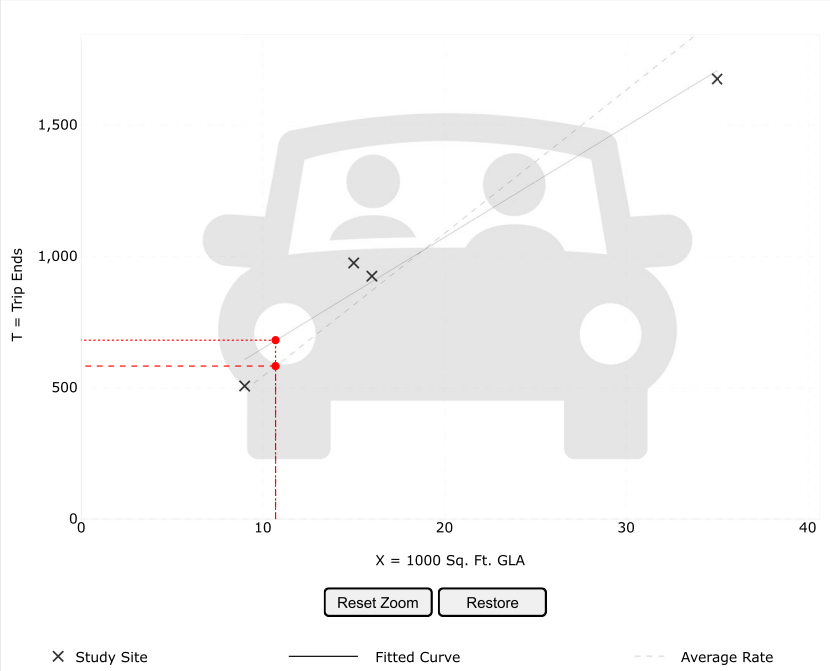

Use the mouse wheel to Zoom Out or Zoom In.
Hover the mouse pointer on data points to view X and T values.

DATA STATISTICS

Land Use:
Strip Retail Plaza (<40k) (822) Click for Description and Data Plots

Independent Variable:
1000 Sq. Ft. GLA

Time Period:
Weekday

Setting/Location:
General Urban/Suburban

Trip Type:
Vehicle

Number of Studies:
4

Avg. 1000 Sq. Ft. GLA:
19

Average Rate:
54.45

Range of Rates:
47.86 - 65.07

Standard Deviation:
7.81

Fitted Curve Equation:
T = 42.20(X) + 229.68

R^2:
0.96

Directional Distribution:
50% entering, 50% exiting

Calculated Trip Ends:
Average Rate: 583 (Total), 291 (Entry), 292 (Exit)
Fitted Curve: 681 (Total), 340 (Entry), 341 (Exit)

© COPYRIGHT 2022 | DEVELOPED IN COLLABORATION WITH TRANSOFT SOLUTIONS INC.

Graph Look Up

Query | Filter

DATA SOURCE:
Trip Generation Manual, 11th Ed

SEARCH BY LAND USE CODE:
822

LAND USE GROUP:
(800-899) Retail

LAND USE :
822 - Strip Retail Plaza (<40k)

LAND USE SUBCATEGORY:
All Sites

SETTING/LOCATION:
General Urban/Suburban

INDEPENDENT VARIABLE (IV):
1000 Sq. Ft. GLA

TIME PERIOD:
Weekday, Peak Hour of Adjacent Street Traffic

TRIP TYPE:
Vehicle

ENTER IV VALUE TO CALCULATE TRIPS:
10.7 Calculate

Data Plot and Equation

Caution – Small Sample Size

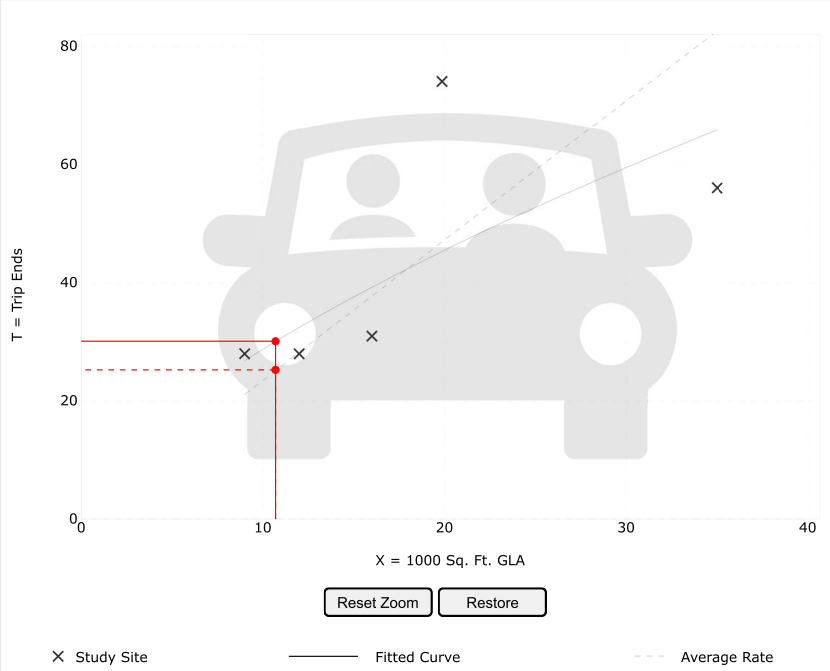

Use the mouse wheel to Zoom Out or Zoom In.
Hover the mouse pointer on data points to view X and T values.

DATA STATISTICS

Land Use:
Strip Retail Plaza (<40k) (822) Click for Description and Data Plots

Independent Variable:
1000 Sq. Ft. GLA

Time Period:
Weekday
Peak Hour of Adjacent Street Traffic
One Hour Between 7 and 9 a.m.

Setting/Location:
General Urban/Suburban

Trip Type:
Vehicle

Number of Studies:
5

Avg. 1000 Sq. Ft. GLA:
18

Average Rate:
2.36

Range of Rates:
1.60 - 3.73

Standard Deviation:
0.94

Fitted Curve Equation:
$Ln(T) = 0.66\ Ln(X) + 1.84$

R^2:
0.57

Directional Distribution:
60% entering, 40% exiting

Calculated Trip Ends:
Average Rate: 25 (Total), 15 (Entry), 10 (Exit)
Fitted Curve: 30 (Total), 18 (Entry), 12 (Exit)

© COPYRIGHT 2022 | DEVELOPED IN COLLABORATION WITH TRANSOFT SOLUTIONS INC.

Graph Look Up

Query | Filter

DATA SOURCE:
Trip Generation Manual, 11th Ed

SEARCH BY LAND USE CODE:
822

LAND USE GROUP:
(800-899) Retail

LAND USE :
822 - Strip Retail Plaza (<40k)

LAND USE SUBCATEGORY:
All Sites

SETTING/LOCATION:
General Urban/Suburban

INDEPENDENT VARIABLE (IV):
1000 Sq. Ft. GLA

TIME PERIOD:
Weekday, Peak Hour of Adjacent Street Traffic

TRIP TYPE:
Vehicle

ENTER IV VALUE TO CALCULATE TRIPS:
10.7 Calculate

Data Plot and Equation

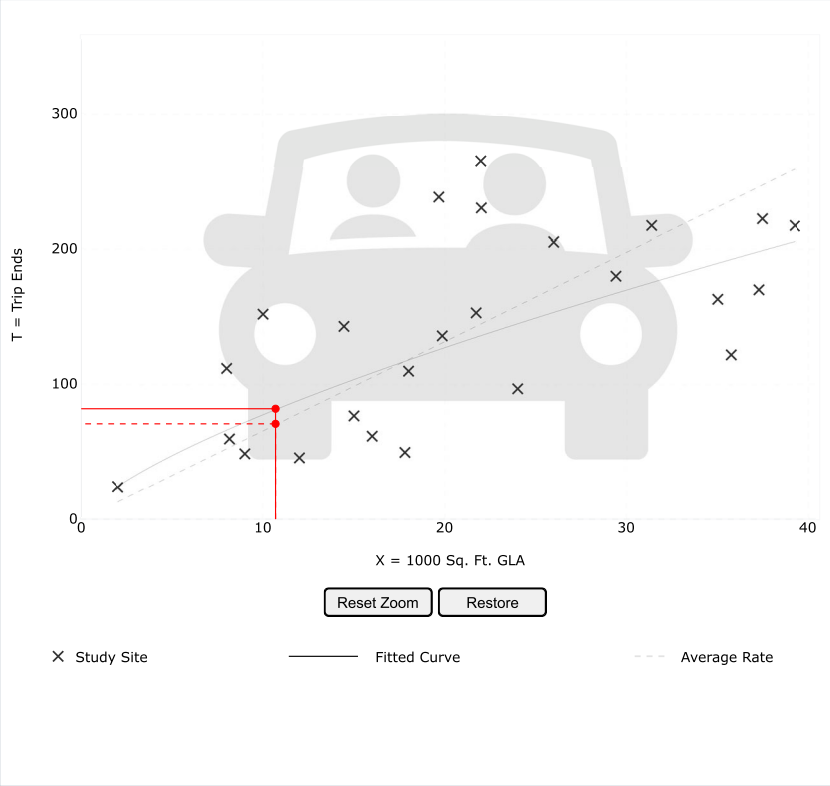

Use the mouse wheel to Zoom Out or Zoom In.
Hover the mouse pointer on data points to view X and T values.

DATA STATISTICS

Land Use:
Strip Retail Plaza (<40k) (822) Click for Description and Data Plots

Independent Variable:
1000 Sq. Ft. GLA

Time Period:
Weekday
Peak Hour of Adjacent Street Traffic
One Hour Between 4 and 6 p.m.

Setting/Location:
General Urban/Suburban

Trip Type:
Vehicle

Number of Studies:
25

Avg. 1000 Sq. Ft. GLA:
21

Average Rate:
6.59

Range of Rates:
2.81 - 15.20

Standard Deviation:
2.94

Fitted Curve Equation:
$Ln(T) = 0.71\ Ln(X) + 2.72$

R^2:
0.56

Directional Distribution:
50% entering, 50% exiting

Calculated Trip Ends:
Average Rate: 71 (Total), 35 (Entry), 36 (Exit)
Fitted Curve: 82 (Total), 41 (Entry), 41 (Exit)

© COPYRIGHT 2022 | DEVELOPED IN COLLABORATION WITH TRANSOFT SOLUTIONS INC.

Graph Look Up

Query | Filter

DATA SOURCE:
Trip Generation Manual, 11th Ed

SEARCH BY LAND USE CODE:
822

LAND USE GROUP:
(800-899) Retail

LAND USE :
822 - Strip Retail Plaza (<40k)

LAND USE SUBCATEGORY:
All Sites

SETTING/LOCATION:
General Urban/Suburban

INDEPENDENT VARIABLE (IV):
1000 Sq. Ft. GLA

TIME PERIOD:
Saturday, Peak Hour of Generator

TRIP TYPE:
Vehicle

ENTER IV VALUE TO CALCULATE TRIPS:
10.7 Calculate

Data Plot and Equation

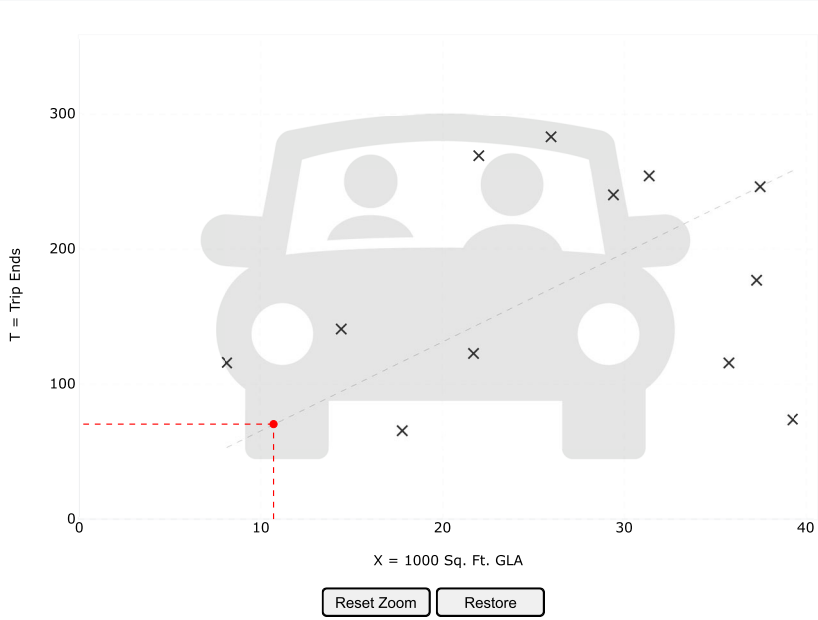

Use the mouse wheel to Zoom Out or Zoom In.
Hover the mouse pointer on data points to view X and T values.

DATA STATISTICS

Land Use:
Strip Retail Plaza (<40k) (822) Click for Description and Data Plots

Independent Variable:
1000 Sq. Ft. GLA

Time Period:
Saturday
Peak Hour of Generator

Setting/Location:
General Urban/Suburban

Trip Type:
Vehicle

Number of Studies:
12

Avg. 1000 Sq. Ft. GLA:
27

Average Rate:
6.57

Range of Rates:
1.88 - 14.23

Standard Deviation:
3.45

Fitted Curve Equation:
Not Given

R^2:
****

Directional Distribution:
51% entering, 49% exiting

Calculated Trip Ends:
Average Rate: 70 (Total), 36 (Entry), 34 (Exit)

© COPYRIGHT 2022 | DEVELOPED IN COLLABORATION WITH TRANSOFT SOLUTIONS INC.

Graph Look Up

Query | Filter

DATA SOURCE:
Trip Generation Manual, 11th Ed

SEARCH BY LAND USE CODE:
930

LAND USE GROUP:
(900-999) Services

LAND USE :
930 - Fast Casual Restaurant

LAND USE SUBCATEGORY:
All Sites

SETTING/LOCATION:
General Urban/Suburban

INDEPENDENT VARIABLE (IV):
1000 Sq. Ft. GFA

TIME PERIOD:
Weekday

TRIP TYPE:
Vehicle

ENTER IV VALUE TO CALCULATE TRIPS:
4.13 Calculate

Data Plot and Equation

Caution – Small Sample Size

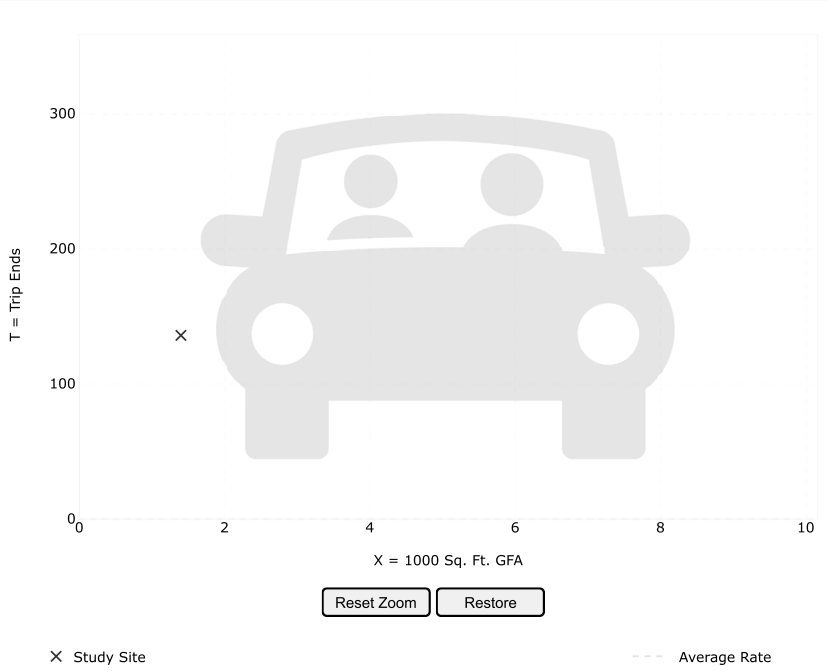

Use the mouse wheel to Zoom Out or Zoom In.
Hover the mouse pointer on data points to view X and T values.

DATA STATISTICS

Land Use:
Fast Casual Restaurant (930) Click for Description and Data Plots

Independent Variable:
1000 Sq. Ft. GFA

Time Period:
Weekday

Setting/Location:
General Urban/Suburban

Trip Type:
Vehicle

Number of Studies:
1

Avg. 1000 Sq. Ft. GFA:
1

Average Rate:
97.14

Range of Rates:
97.14 - 97.14

Standard Deviation:
****

Fitted Curve Equation:
Not Given

R^2:
****

Directional Distribution:
50% entering, 50% exiting

Calculated Trip Ends:
Average Rate: 401 (Total), 200 (Entry), 201 (Exit)

© COPYRIGHT 2022 | DEVELOPED IN COLLABORATION WITH TRANSOFT SOLUTIONS INC.

Graph Look Up

Query | Filter

DATA SOURCE:
Trip Generation Manual, 11th Ed

SEARCH BY LAND USE CODE:
930

LAND USE GROUP:
(900-999) Services

LAND USE :
930 - Fast Casual Restaurant

LAND USE SUBCATEGORY:
All Sites

SETTING/LOCATION:
General Urban/Suburban

INDEPENDENT VARIABLE (IV):
1000 Sq. Ft. GFA

TIME PERIOD:
Weekday, Peak Hour of Adjacent Street Traffic

TRIP TYPE:
Vehicle

ENTER IV VALUE TO CALCULATE TRIPS:
4.13 Calculate

Data Plot and Equation

Caution – Small Sample Size

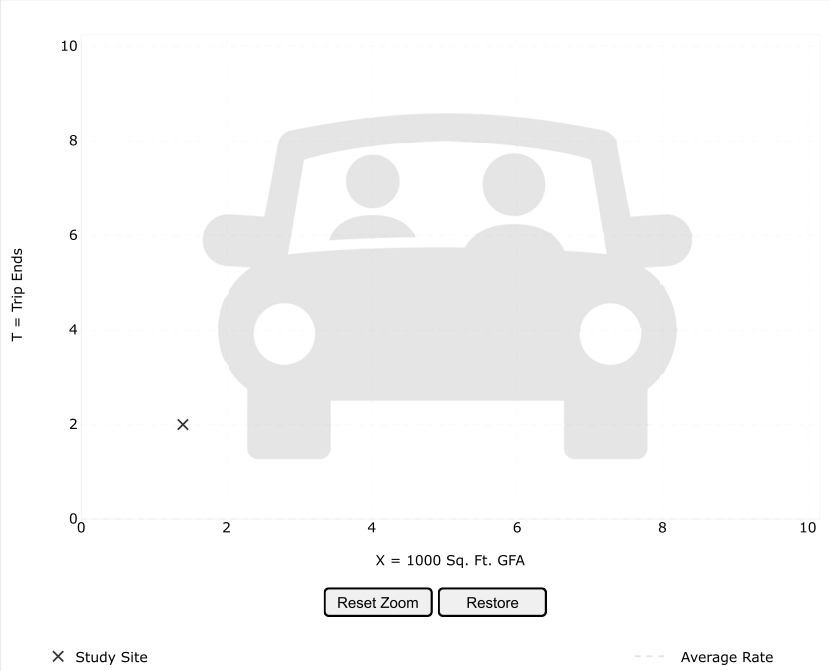

Use the mouse wheel to Zoom Out or Zoom In.
Hover the mouse pointer on data points to view X and T values.

DATA STATISTICS

Land Use:
Fast Casual Restaurant (930) Click for Description and Data Plots

Independent Variable:
1000 Sq. Ft. GFA

Time Period:
Weekday
Peak Hour of Adjacent Street Traffic
One Hour Between 7 and 9 a.m.

Setting/Location:
General Urban/Suburban

Trip Type:
Vehicle

Number of Studies:
1

Avg. 1000 Sq. Ft. GFA:
1

Average Rate:
1.43

Range of Rates:
1.43 - 1.43

Standard Deviation:
****

Fitted Curve Equation:
Not Given

R^2:
****

Directional Distribution:
50% entering, 50% exiting

Calculated Trip Ends:
Average Rate: 6 (Total), 3 (Entry), 3 (Exit)

© COPYRIGHT 2022 | DEVELOPED IN COLLABORATION WITH TRANSOFT SOLUTIONS INC.

Graph Look Up

Query | Filter

DATA SOURCE:
Trip Generation Manual, 11th Ed

SEARCH BY LAND USE CODE:
930

LAND USE GROUP:
(900-999) Services

LAND USE :
930 - Fast Casual Restaurant

LAND USE SUBCATEGORY:
All Sites

SETTING/LOCATION:
General Urban/Suburban

INDEPENDENT VARIABLE (IV):
1000 Sq. Ft. GFA

TIME PERIOD:
Weekday, Peak Hour of Adjacent Street Traffic

TRIP TYPE:
Vehicle

ENTER IV VALUE TO CALCULATE TRIPS:
4.13 Calculate

Data Plot and Equation

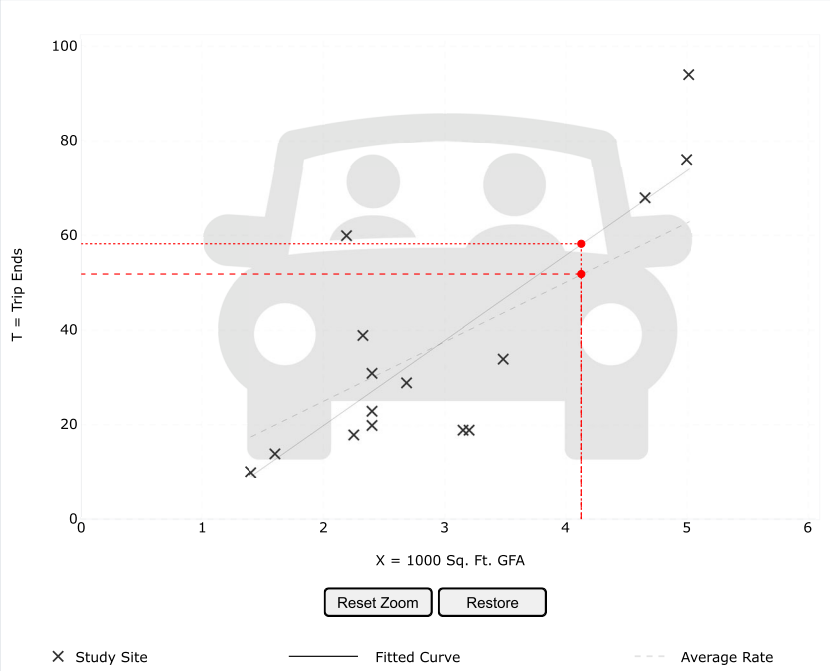

Use the mouse wheel to Zoom Out or Zoom In.
Hover the mouse pointer on data points to view X and T values.

DATA STATISTICS

Land Use:
Fast Casual Restaurant (930) Click for Description and Data Plots

Independent Variable:
1000 Sq. Ft. GFA

Time Period:
Weekday
Peak Hour of Adjacent Street Traffic
One Hour Between 4 and 6 p.m.

Setting/Location:
General Urban/Suburban

Trip Type:
Vehicle

Number of Studies:
15

Avg. 1000 Sq. Ft. GFA:
3

Average Rate:
12.55

Range of Rates:
5.94 - 27.40

Standard Deviation:
5.52

Fitted Curve Equation:
T = 17.96(X) - 15.94

R^2:
0.65

Directional Distribution:
55% entering, 45% exiting

Calculated Trip Ends:
Average Rate: 52 (Total), 29 (Entry), 23 (Exit)
Fitted Curve: 58 (Total), 32 (Entry), 26 (Exit)

© COPYRIGHT 2022 | DEVELOPED IN COLLABORATION WITH TRANSOFT SOLUTIONS INC.

Graph Look Up

Query | Filter

DATA SOURCE:
Trip Generation Manual, 11th Ed

SEARCH BY LAND USE CODE:
930

LAND USE GROUP:
(900-999) Services

LAND USE :
930 - Fast Casual Restaurant

LAND USE SUBCATEGORY:
All Sites

SETTING/LOCATION:
General Urban/Suburban

INDEPENDENT VARIABLE (IV):
1000 Sq. Ft. GFA

TIME PERIOD:
Saturday, Peak Hour of Generator

TRIP TYPE:
Vehicle

ENTER IV VALUE TO CALCULATE TRIPS:
4.13 Calculate

Data Plot and Equation

Caution – Small Sample Size

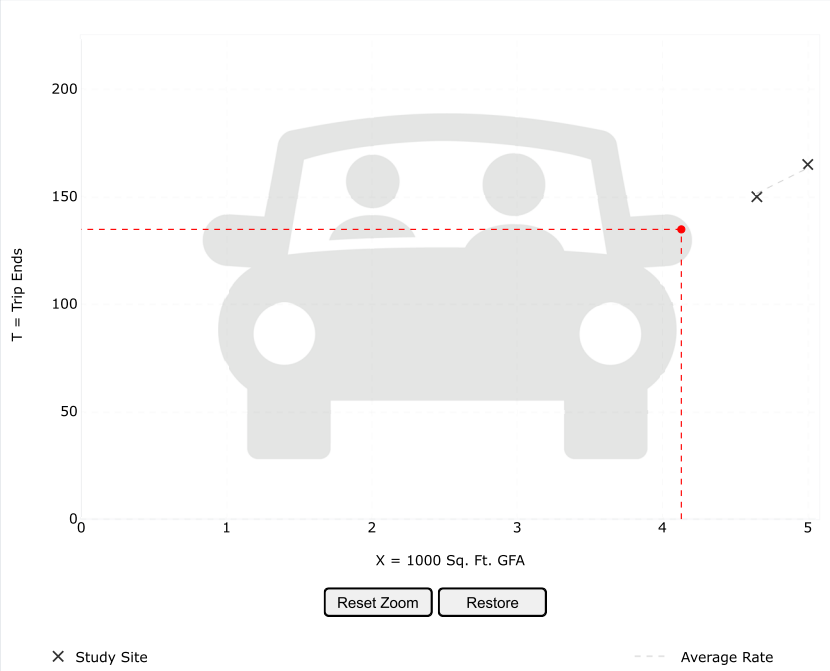

Use the mouse wheel to Zoom Out or Zoom In.
Hover the mouse pointer on data points to view X and T values.

DATA STATISTICS

Land Use:
Fast Casual Restaurant (930) Click for Description and Data Plots

Independent Variable:
1000 Sq. Ft. GFA

Time Period:
Saturday
Peak Hour of Generator

Setting/Location:
General Urban/Suburban

Trip Type:
Vehicle

Number of Studies:
2

Avg. 1000 Sq. Ft. GFA:
5

Average Rate:
32.64

Range of Rates:
32.26 - 33.00

Standard Deviation:
****

Fitted Curve Equation:
Not Given

R^2:
****

Directional Distribution:
55% entering, 45% exiting

Calculated Trip Ends:
Average Rate: 135 (Total), 74 (Entry), 61 (Exit)

© COPYRIGHT 2022 | DEVELOPED IN COLLABORATION WITH TRANSOFT SOLUTIONS INC.

Graph Look Up

Query | Filter

DATA SOURCE:
Trip Generation Manual, 11th Ed

SEARCH BY LAND USE CODE:
937

LAND USE GROUP:
(900-999) Services

LAND USE :
937 - Coffee/Donut Shop with Drive-Through W

LAND USE SUBCATEGORY:
All Sites

SETTING/LOCATION:
General Urban/Suburban

INDEPENDENT VARIABLE (IV):
1000 Sq. Ft. GFA

TIME PERIOD:
Weekday

TRIP TYPE:
Vehicle

ENTER IV VALUE TO CALCULATE TRIPS:
2.4 Calculate

Data Plot and Equation

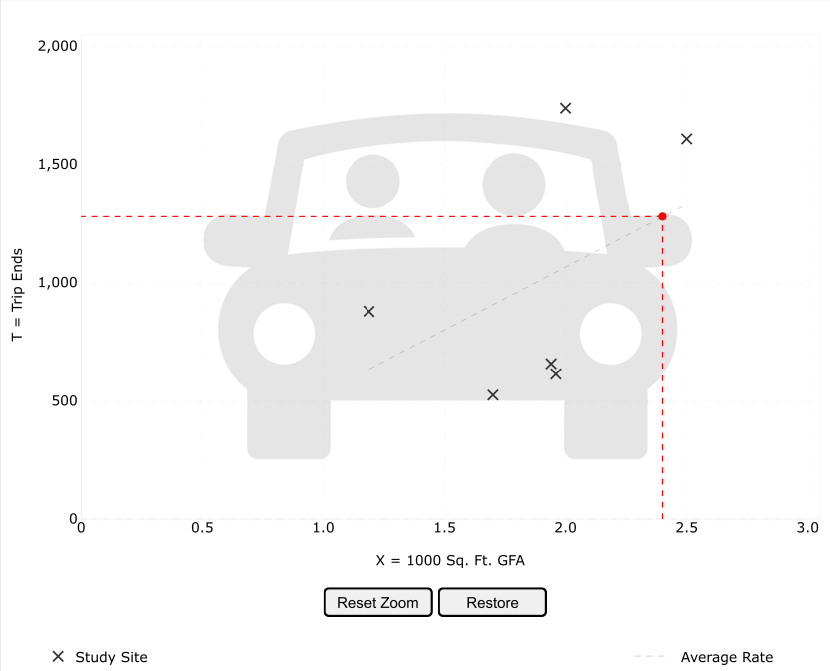

Use the mouse wheel to Zoom Out or Zoom In.
Hover the mouse pointer on data points to view X and T values.

DATA STATISTICS

Land Use:
Coffee/Donut Shop with Drive-Through Window (937) Click for Description and Data Plots

Independent Variable:
1000 Sq. Ft. GFA

Time Period:
Weekday

Setting/Location:
General Urban/Suburban

Trip Type:
Vehicle

Number of Studies:
6

Avg. 1000 Sq. Ft. GFA:
2

Average Rate:
533.57

Range of Rates:
309.41 - 869.00

Standard Deviation:
243.65

Fitted Curve Equation:
Not Given

R^2:
****

Directional Distribution:
50% entering, 50% exiting

Calculated Trip Ends:
Average Rate: 1281 (Total), 640 (Entry), 641 (Exit)

© COPYRIGHT 2022 | DEVELOPED IN COLLABORATION WITH TRANSOFT SOLUTIONS INC.

Graph Look Up

Query | Filter

DATA SOURCE:
Trip Generation Manual, 11th Ed

SEARCH BY LAND USE CODE:
937

LAND USE GROUP:
(900-999) Services

LAND USE :
937 - Coffee/Donut Shop with Drive-Through W

LAND USE SUBCATEGORY:
All Sites

SETTING/LOCATION:
General Urban/Suburban

INDEPENDENT VARIABLE (IV):
1000 Sq. Ft. GFA

TIME PERIOD:
Weekday, Peak Hour of Adjacent Street Traffic

TRIP TYPE:
Vehicle

ENTER IV VALUE TO CALCULATE TRIPS:
2.4 Calculate

Data Plot and Equation

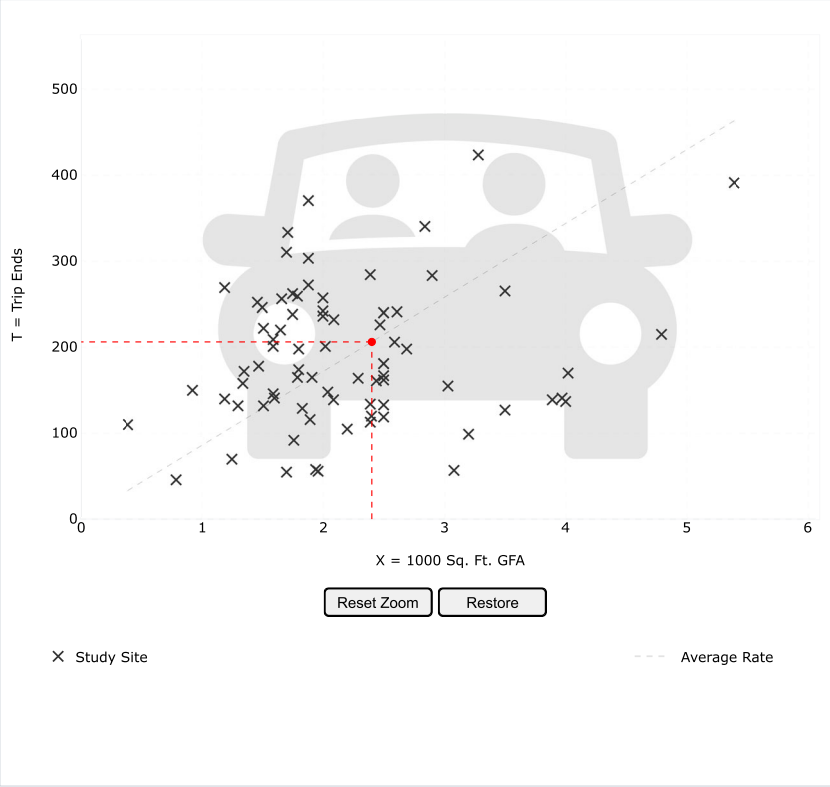

Use the mouse wheel to Zoom Out or Zoom In.
Hover the mouse pointer on data points to view X and T values.

DATA STATISTICS

Land Use:
Coffee/Donut Shop with Drive-Through Window (937) Click for Description and Data Plots

Independent Variable:
1000 Sq. Ft. GFA

Time Period:
Weekday
Peak Hour of Adjacent Street Traffic
One Hour Between 7 and 9 a.m.

Setting/Location:
General Urban/Suburban

Trip Type:
Vehicle

Number of Studies:
78

Avg. 1000 Sq. Ft. GFA:
2

Average Rate:
85.88

Range of Rates:
18.51 - 282.05

Standard Deviation:
44.92

Fitted Curve Equation:
Not Given

R^2:
****

Directional Distribution:
51% entering, 49% exiting

Calculated Trip Ends:
Average Rate: 206 (Total), 105 (Entry), 101 (Exit)

© COPYRIGHT 2022 | DEVELOPED IN COLLABORATION WITH TRANSOFT SOLUTIONS INC.

Graph Look Up

Query | Filter

DATA SOURCE: Trip Generation Manual, 11th Ed

SEARCH BY LAND USE CODE: 937

LAND USE GROUP: (900-999) Services

LAND USE : 937 - Coffee/Donut Shop with Drive-Through W

LAND USE SUBCATEGORY: All Sites

SETTING/LOCATION: General Urban/Suburban

INDEPENDENT VARIABLE (IV): 1000 Sq. Ft. GFA

TIME PERIOD: Weekday, Peak Hour of Adjacent Street Traffic

TRIP TYPE: Vehicle

ENTER IV VALUE TO CALCULATE TRIPS: 2.4 Calculate

Data Plot and Equation

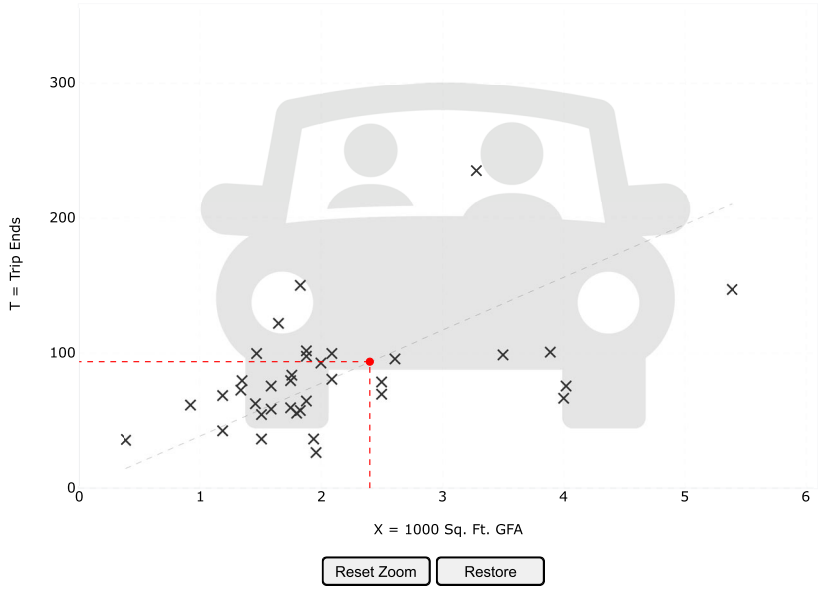

Use the mouse wheel to Zoom Out or Zoom In.
Hover the mouse pointer on data points to view X and T values.

DATA STATISTICS

Land Use:
Coffee/Donut Shop with Drive-Through Window
(937) Click for Description and Data Plots

Independent Variable:
1000 Sq. Ft. GFA

Time Period:
Weekday
Peak Hour of Adjacent Street Traffic
One Hour Between 4 and 6 p.m.

Setting/Location:
General Urban/Suburban

Trip Type:
Vehicle

Number of Studies:
36

Avg. 1000 Sq. Ft. GFA:
2

Average Rate:
38.99

Range of Rates:
13.78 - 92.31

Standard Deviation:
17.79

Fitted Curve Equation:
Not Given

R^2:
****

Directional Distribution:
50% entering, 50% exiting

Calculated Trip Ends:
Average Rate: 94 (Total), 47 (Entry), 47 (Exit)

© COPYRIGHT 2022 | DEVELOPED IN COLLABORATION WITH TRANSOFT SOLUTIONS INC.

Graph Look Up

Query | Filter

DATA SOURCE:
Trip Generation Manual, 11th Ed

SEARCH BY LAND USE CODE:
937

LAND USE GROUP:
(900-999) Services

LAND USE :
937 - Coffee/Donut Shop with Drive-Through W

LAND USE SUBCATEGORY:
All Sites

SETTING/LOCATION:
General Urban/Suburban

INDEPENDENT VARIABLE (IV):
1000 Sq. Ft. GFA

TIME PERIOD:
Saturday, Peak Hour of Generator

TRIP TYPE:
Vehicle

ENTER IV VALUE TO CALCULATE TRIPS:
2.4 Calculate

Data Plot and Equation

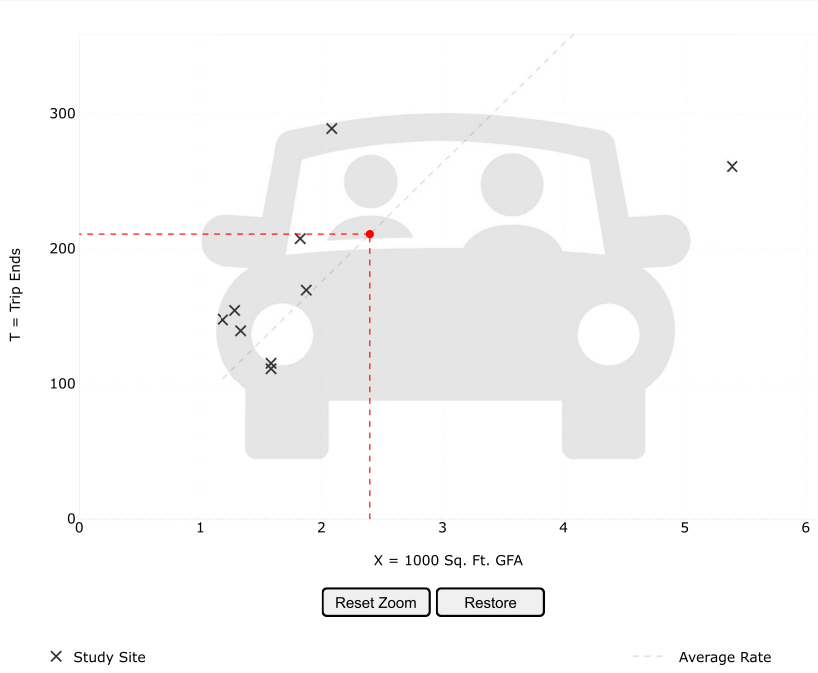

Use the mouse wheel to Zoom Out or Zoom In.
Hover the mouse pointer on data points to view X and T values.

DATA STATISTICS

Land Use:
Coffee/Donut Shop with Drive-Through Window (937) Click for Description and Data Plots

Independent Variable:
1000 Sq. Ft. GFA

Time Period:
Saturday
Peak Hour of Generator

Setting/Location:
General Urban/Suburban

Trip Type:
Vehicle

Number of Studies:
9

Avg. 1000 Sq. Ft. GFA:
2

Average Rate:
87.91

Range of Rates:
48.42 - 138.28

Standard Deviation:
34.34

Fitted Curve Equation:
Not Given

R^2:
****

Directional Distribution:
50% entering, 50% exiting

Calculated Trip Ends:
Average Rate: 211 (Total), 105 (Entry), 106 (Exit)

© COPYRIGHT 2022 | DEVELOPED IN COLLABORATION WITH TRANSOFT SOLUTIONS INC.

NCHRP 684 Internal Trip Capture Estimation Tool			
Project Name:	Proposed Commercial Development	**Organization:**	VAI
Project Location:	8428 - Weymouth	**Performed By:**	DCL
Scenario Description:		**Date:**	6/22/2022
Analysis Year:		**Checked By:**	
Analysis Period:	**AM Street Peak Hour**	**Date:**	

Table 1-A: Base Vehicle-Trip Generation Estimates (Single-Use Site Estimate)

Land Use	Development Data (*For Information Only*)			Estimated Vehicle-Trips[3]		
	ITE LUCs[1]	Quantity	Units	Total	Entering	Exiting
Office				0		
Retail	822	10,700 sf		25	15	10
Restaurant	930 and 937	6,526 sf		212	108	104
Cinema/Entertainment				0		
Residential				0		
Hotel				0		
All Other Land Uses[2]				0		
				237	123	114

Table 2-A: Mode Split and Vehicle Occupancy Estimates

Land Use	Entering Trips			Exiting Trips		
	Veh. Occ.[4]	% Transit	% Non-Motorized	Veh. Occ.[4]	% Transit	% Non-Motorized
Office						
Retail	1.00	0%	0%	1.00	0%	0%
Restaurant	1.00	0%	0%	1.00	0%	0%
Cinema/Entertainment						
Residential						
Hotel						
All Other Land Uses[2]						

Table 3-A: Average Land Use Interchange Distances (Feet Walking Distance)

Origin (From)	Destination (To)					
	Office	Retail	Restaurant	Cinema/Entertainment	Residential	Hotel
Office						
Retail						
Restaurant						
Cinema/Entertainment						
Residential						
Hotel						

Table 4-A: Internal Person-Trip Origin-Destination Matrix*

Origin (From)	Destination (To)					
	Office	Retail	Restaurant	Cinema/Entertainment	Residential	Hotel
Office		0	0	0	0	0
Retail	0		1	0	0	0
Restaurant	0	1		0	0	0
Cinema/Entertainment	0	0	0		0	0
Residential	0	0	0	0		0
Hotel	0	0	0	0	0	

Table 5-A: Computations Summary

	Total	Entering	Exiting
All Person-Trips	237	123	114
Internal Capture Percentage	2%	2%	2%
External Vehicle-Trips[5]	233	121	112
External Transit-Trips[6]	0	0	0
External Non-Motorized Trips[6]	0	0	0

Table 6-A: Internal Trip Capture Percentages by Land Use

Land Use	Entering Trips	Exiting Trips
Office	N/A	N/A
Retail	7%	10%
Restaurant	1%	1%
Cinema/Entertainment	N/A	N/A
Residential	N/A	N/A
Hotel	N/A	N/A

[1]Land Use Codes (LUCs) from *Trip Generation Manual*, published by the Institute of Transportation Engineers.

[2]Total estimate for all other land uses at mixed-use development site is not subject to internal trip capture computations in this estimator.

[3]Enter trips assuming no transit or non-motorized trips (as assumed in ITE *Trip Generation Manual*).

[4]Enter vehicle occupancy assumed in Table 1-A vehicle trips. If vehicle occupancy changes for proposed mixed-use project, manual adjustments must be made to Tables 5-A, 9-A (O and D). Enter transit, non-motorized percentages that will result with proposed mixed-use project complete.

[5]Vehicle-trips computed using the mode split and vehicle occupancy values provided in Table 2-A.

[6]Person-Trips

*Indicates computation that has been rounded to the nearest whole number.

Estimation Tool Developed by the Texas A&M Transportation Institute - Version 2013.1

Project Name:	Proposed Commercial Development
Analysis Period:	**AM Street Peak Hour**

Table 7-A: Conversion of Vehicle-Trip Ends to Person-Trip Ends

Land Use	Table 7-A (D): Entering Trips			Table 7-A (O): Exiting Trips		
	Veh. Occ.	Vehicle-Trips	Person-Trips*	Veh. Occ.	Vehicle-Trips	Person-Trips*
Office	1.00	0	0	1.00	0	0
Retail	1.00	15	15	1.00	10	10
Restaurant	1.00	108	108	1.00	104	104
Cinema/Entertainment	1.00	0	0	1.00	0	0
Residential	1.00	0	0	1.00	0	0
Hotel	1.00	0	0	1.00	0	0

Table 8-A (O): Internal Person-Trip Origin-Destination Matrix (Computed at Origin)

Origin (From)	Destination (To)					
	Office	Retail	Restaurant	Cinema/Entertainment	Residential	Hotel
Office		0	0	0	0	0
Retail	3		1	0	1	0
Restaurant	32	15		0	4	3
Cinema/Entertainment	0	0	0		0	0
Residential	0	0	0	0		0
Hotel	0	0	0	0	0	

Table 8-A (D): Internal Person-Trip Origin-Destination Matrix (Computed at Destination)

Origin (From)	Destination (To)					
	Office	Retail	Restaurant	Cinema/Entertainment	Residential	Hotel
Office		5	25	0	0	0
Retail	0		54	0	0	0
Restaurant	0	1		0	0	0
Cinema/Entertainment	0	0	0		0	0
Residential	0	3	22	0		0
Hotel	0	1	6	0	0	

Table 9-A (D): Internal and External Trips Summary (Entering Trips)

Destination Land Use	Person-Trip Estimates			External Trips by Mode*		
	Internal	External	Total	Vehicles[1]	Transit[2]	Non-Motorized[2]
Office	0	0	0	0	0	0
Retail	1	14	15	14	0	0
Restaurant	1	107	108	107	0	0
Cinema/Entertainment	0	0	0	0	0	0
Residential	0	0	0	0	0	0
Hotel	0	0	0	0	0	0
All Other Land Uses[3]	0	0	0	0	0	0

Table 9-A (O): Internal and External Trips Summary (Exiting Trips)

Origin Land Use	Person-Trip Estimates			External Trips by Mode*		
	Internal	External	Total	Vehicles[1]	Transit[2]	Non-Motorized[2]
Office	0	0	0	0	0	0
Retail	1	9	10	9	0	0
Restaurant	1	103	104	103	0	0
Cinema/Entertainment	0	0	0	0	0	0
Residential	0	0	0	0	0	0
Hotel	0	0	0	0	0	0
All Other Land Uses[3]	0	0	0	0	0	0

[1]Vehicle-trips computed using the mode split and vehicle occupancy values provided in Table 2-A

[2]Person-Trips

[3]Total estimate for all other land uses at mixed-use development site is not subject to internal trip capture computations in this estimator

*Indicates computation that has been rounded to the nearest whole number.

NCHRP 684 Internal Trip Capture Estimation Tool			
Project Name:	Proposed Commerical Development	**Organization:**	VAI
Project Location:	8428 - Weymouth	**Performed By:**	DCL
Scenario Description:		**Date:**	6/22/2022
Analysis Year:		**Checked By:**	
Analysis Period:	**PM Street Peak Hour**	**Date:**	

Table 1-P: Base Vehicle-Trip Generation Estimates (Single-Use Site Estimate)

Land Use	Development Data (*For Information Only*)			Estimated Vehicle-Trips[3]		
	ITE LUCs[1]	Quantity	Units	Total	Entering	Exiting
Office				0		
Retail	822	10,700 sf		82	41	41
Restaurant	930 and 937	6,526 sf		146	76	70
Cinema/Entertainment				0		
Residential				0		
Hotel				0		
All Other Land Uses[2]				0		
				228	117	111

Table 2-P: Mode Split and Vehicle Occupancy Estimates

Land Use	Entering Trips			Exiting Trips		
	Veh. Occ.[4]	% Transit	% Non-Motorized	Veh. Occ.[4]	% Transit	% Non-Motorized
Office						
Retail	1.00	0%	0%	1.00	0%	0%
Restaurant	1.00	0%	0%	1.00	0%	0%
Cinema/Entertainment						
Residential						
Hotel						
All Other Land Uses[2]						

Table 3-P: Average Land Use Interchange Distances (Feet Walking Distance)

Origin (From)	Destination (To)					
	Office	Retail	Restaurant	Cinema/Entertainment	Residential	Hotel
Office						
Retail						
Restaurant						
Cinema/Entertainment						
Residential						
Hotel						

Table 4-P: Internal Person-Trip Origin-Destination Matrix*

Origin (From)	Destination (To)					
	Office	Retail	Restaurant	Cinema/Entertainment	Residential	Hotel
Office		0	0	0	0	0
Retail	0		12	0	0	0
Restaurant	0	21		0	0	0
Cinema/Entertainment	0	0	0		0	0
Residential	0	0	0	0		0
Hotel	0	0	0	0	0	

Table 5-P: Computations Summary

	Total	Entering	Exiting
All Person-Trips	228	117	111
Internal Capture Percentage	29%	28%	30%
External Vehicle-Trips[5]	162	84	78
External Transit-Trips[6]	0	0	0
External Non-Motorized Trips[6]	0	0	0

Table 6-P: Internal Trip Capture Percentages by Land Use

Land Use	Entering Trips	Exiting Trips
Office	N/A	N/A
Retail	51%	29%
Restaurant	16%	30%
Cinema/Entertainment	N/A	N/A
Residential	N/A	N/A
Hotel	N/A	N/A

[1]Land Use Codes (LUCs) from *Trip Generation Manual*, published by the Institute of Transportation Engineers.

[2]Total estimate for all other land uses at mixed-use development site is not subject to internal trip capture computations in this estimator.

[3]Enter trips assuming no transit or non-motorized trips (as assumed in ITE *Trip Generation Manual*).

[4]Enter vehicle occupancy assumed in Table 1-P vehicle trips. If vehicle occupancy changes for proposed mixed-use project, manual adjustments must be

[5]Vehicle-trips computed using the mode split and vehicle occupancy values provided in Table 2-P.

[6]Person-Trips

*Indicates computation that has been rounded to the nearest whole number.

Estimation Tool Developed by the Texas A&M Transportation Institute - Version 2013.1

Project Name:	Proposed Commerical Development
Analysis Period:	**PM Street Peak Hour**

Table 7-P: Conversion of Vehicle-Trip Ends to Person-Trip Ends

Land Use	Table 7-P (D): Entering Trips			Table 7-P (O): Exiting Trips		
	Veh. Occ.	Vehicle-Trips	Person-Trips*	Veh. Occ.	Vehicle-Trips	Person-Trips*
Office	1.00	0	0	1.00	0	0
Retail	1.00	41	41	1.00	41	41
Restaurant	1.00	76	76	1.00	70	70
Cinema/Entertainment	1.00	0	0	1.00	0	0
Residential	1.00	0	0	1.00	0	0
Hotel	1.00	0	0	1.00	0	0

Table 8-P (O): Internal Person-Trip Origin-Destination Matrix (Computed at Origin)

Origin (From)	Destination (To)					
	Office	Retail	Restaurant	Cinema/Entertainment	Residential	Hotel
Office		0	0	0	0	0
Retail	1		12	2	11	2
Restaurant	2	29		6	13	5
Cinema/Entertainment	0	0	0		0	0
Residential	0	0	0	0		0
Hotel	0	0	0	0	0	

Table 8-P (D): Internal Person-Trip Origin-Destination Matrix (Computed at Destination)

Origin (From)	Destination (To)					
	Office	Retail	Restaurant	Cinema/Entertainment	Residential	Hotel
Office		3	2	0	0	0
Retail	0		22	0	0	0
Restaurant	0	21		0	0	0
Cinema/Entertainment	0	2	2		0	0
Residential	0	4	11	0		0
Hotel	0	1	4	0	0	

Table 9-P (D): Internal and External Trips Summary (Entering Trips)

Destination Land Use	Person-Trip Estimates			External Trips by Mode*		
	Internal	External	Total	Vehicles[1]	Transit[2]	Non-Motorized[2]
Office	0	0	0	0	0	0
Retail	21	20	41	20	0	0
Restaurant	12	64	76	64	0	0
Cinema/Entertainment	0	0	0	0	0	0
Residential	0	0	0	0	0	0
Hotel	0	0	0	0	0	0
All Other Land Uses[3]	0	0	0	0	0	0

Table 9-P (O): Internal and External Trips Summary (Exiting Trips)

Origin Land Use	Person-Trip Estimates			External Trips by Mode*		
	Internal	External	Total	Vehicles[1]	Transit[2]	Non-Motorized[2]
Office	0	0	0	0	0	0
Retail	12	29	41	29	0	0
Restaurant	21	49	70	49	0	0
Cinema/Entertainment	0	0	0	0	0	0
Residential	0	0	0	0	0	0
Hotel	0	0	0	0	0	0
All Other Land Uses[3]	0	0	0	0	0	0

[1]Vehicle-trips computed using the mode split and vehicle occupancy values provided in Table 2-P

[2]Person-Trips

[3]Total estimate for all other land uses at mixed-use development site is not subject to internal trip capture computations in this estimator

*Indicates computation that has been rounded to the nearest whole number.

Proposed Mixed-Use Development, Weymouth, MA

Analyst: DCL Vanasse & Associates
Date: 6/22/2022

Job No. 8428
Time Period: Daily

Land Use A	Restaurant		
ITE LUC	930 & 937		
Size	6.526	ksf	
	Total	Internal	External
Enter	842	61	781
Exit	842	85	757
Total	1684	146	1538

A to B

% Demand	Trips	Balanced
21%	176.82	85
% Demand	Trips	
29%	84.68	

B to A

% Demand	Trips	Balanced
29%	244.18	61
% Demand	Trips	
21%	61.32	

A to C

% Demand	Trips	Balanced
0%	0	0
% Demand	Trips	
0%	0	

C to A

% Demand	Trips	Balanced
0%	0	0
% Demand	Trips	
0%	0	

B to C

% Demand	Trips	Balanced
0%	0	0
% Demand	Trips	
0%	0	

C to B

% Demand	Trips	Balanced
0%	0	0
% Demand	Trips	
0%	0	

Land Use B	Retail		
ITE LUC	822		
Size	10.70	ksf	
		Internal	External
Enter	292	85	207
Exit	292	61	231
Total	584	146	438

Land Use C			
ITE LUC			
Size			
	Total	Internal	External
Enter		0	0
Exit		0	0
Total	0	0	0

Net External Trips for Multi-Use Development

	Land Use A	Land Use B	Land Use C	Total	
Enter	781	207	0	988	
Exit	757	231	0	988	
Total	1538	438	0	1976	Internal Capture Rate
Single-Use Trip Gen Est.	1684	584	0	2268	13%

* from ITE Trip Generation Handbook, 9th Edition, 2012.

Proposed Mixed-Use Development, Weymouth, MA

Analyst: DCL Vanasse & Associates
Date: 6/22/2022

Job No. 8428
Time Period: Daily

Land Use A	Restaurant		
ITE LUC	930 & 937		
Size	6.526	ksf	
	Total	Internal	External
Enter	179	10	169
Exit	167	18	149
Total	346	28	318

A to B

% Demand	Trips	Balanced
29%	48.43	18
% Demand	Trips	
50%	18	

B to A

% Demand	Trips	Balanced
50%	89.5	10
% Demand	Trips	
29%	9.86	

A to C

% Demand	Trips	Balanced
0%	0	0
% Demand	Trips	
0%	0	

C to A

% Demand	Trips	Balanced
0%	0	0
% Demand	Trips	
0%	0	

B to C

% Demand	Trips	Balanced
0%	0	0
% Demand	Trips	
0%	0	

Land Use B	Retail		
ITE LUC	822		
Size	10.70	ksf	
		Internal	External
Enter	36	18	18
Exit	34	10	24
Total	70	28	42

C to B

% Demand	Trips	Balanced
0%	0	0
% Demand	Trips	
0%	0	

Land Use C			
ITE LUC			
Size			
	Total	Internal	External
Enter		0	0
Exit		0	0
Total	0	0	0

Net External Trips for Multi-Use Development

	Land Use A	Land Use B	Land Use C	Total	
Enter	169	18	0	187	
Exit	149	24	0	173	
Total	318	42	0	360	Internal Capture Rate
Single-Use Trip Gen Est.	346	70	0	416	13%

* from ITE Trip Generation Handbook, 9th Edition, 2012.

Vehicle Pass-By Rates by Land Use

Source: ITE *Trip Generation Manual* , 11th Edition

Land Use Code	821
Land Use	Shopping Plaza (40 - 150k)
Setting	General Urban/Suburban
Time Period	Weekday PM Peak Period
# Data Sites	15
Average Pass-By Rate	40%

Pass-By Characteristics for Individual Sites

GLA (000)	State or Province	Survey Year	# Interviews	Pass-By Trip (%)	Non-Pass-By Trips			Adj Street Peak Hour Volume	Source
					Primary (%)	Diverted (%)	Total (%)		
45	Florida	1992	844	56	24	20	44	—	30
50	Florida	1992	555	41	41	18	59	—	30
52	Florida	1995	665	42	33	25	58	—	30
53	Florida	1993	162	59	—	—	41	—	30
57.23	Kentucky	1993	247	31	53	16	69	2659	34
60	Florida	1995	1583	40	38	22	60	—	30
69.4	Kentucky	1993	109	25	42	33	75	1559	34
77	Florida	1992	365	46	—	—	54	—	30
78	Florida	1991	702	55	23	22	45	—	30
82	Florida	1992	336	34	—	—	66	—	30
92.857	Kentucky	1993	133	22	50	28	78	3555	34
100.888	Kentucky	1993	281	28	50	22	72	2111	34
121.54	Kentucky	1993	210	53	30	17	47	2636	34
144	New Jersey	1990	176	32	44	24	68	—	24
146.8	Kentucky	1993	—	36	39	25	64	—	34

Vehicle Pass-By Rates by Land Use

Source: ITE *Trip Generation Manual* , 11th Edition

Land Use Code	821								
Land Use	Shopping Plaza (40 - 150k)								
Setting	General Urban/Suburban								
Time Period	Saturday Midday								
# Data Sites	1								
Average Pass-By Rate	31%								
	Pass-By Characteristics for Individual Sites								
	State or	Survey		Pass-By	Non-Pass-By Trips			Adjacent Street	
GLA (000)	Province	Year	# Interviews	Trip (%)	Primary (%)	Diverted (%)	Total (%)	Daily Volume	Source
144	New Jersey	1990	264	31	47	22	69	63362	24

Vehicle Pass-By Rates by Land Use

Source: ITE *Trip Generation Manual* , 11th Edition

Land Use Code	932
Land Use	High-Turnover (Sit-Down) Restaurant
Setting	General Urban/Suburban
Time Period	Weekday PM Peak Period
# Data Sites	12
Average Pass-By Rate	43%

Pass-By Characteristics for Individual Sites

GFA (000)	State or Province	Survey Year	# Interviews	Pass-By Trip (%)	Non-Pass-By Trips			Adj Street Peak Hour Volume	Source
					Primary (%)	Diverted (%)	Total (%)		
2.9	Kentucky	1993	41	37	27	36	63	3935	2
3.1	Kentucky	1993	21	38	29	33	62	2580	2
4.6	Florida	1992	276	63	—	—	37	—	30
5	Florida	1992	65	58	—	—	42	—	30
5.3	Kentucky	1993	24	50	37	13	50	1615	2
5.7	Florida	1994	308	57	—	—	43	—	30
5.8	Florida	1992	150	32	—	—	68	—	30
6.2	Florida	1995	521	46	43	11	54	—	30
7.1	Indiana	1993	—	23	23	54	77	1565	2
8	Florida	1995	664	40	39	21	60	—	30
11	Florida	1996	267	38	43	19	62	—	30
12	Florida	1996	317	29	51	20	71	—	30

Vehicle Pass-By Rates by Land Use

Source: ITE *Trip Generation Manual* , 11th Edition

Land Use Code	934
Land Use	Fast-Food Restaurant with Drive-Through Window
Setting	General Urban/Suburban
Time Period	Weekday AM Peak Period
# Data Sites	5
Average Pass-By Rate	50%

Pass-By Characteristics for Individual Sites

GFA (000)	State or Province	Survey Year	# Interviews	Pass-By Trip (%)	Non-Pass-By Trips			Adj Street Peak Hour Volume	Source
					Primary (%)	Diverted (%)	Total (%)		
1.4	Kentucky	1993	—	62	22	16	38	1407	2
3	Kentucky	1993	—	43	14	43	57	2903	2
3.3	--	1996	—	68	—	—	32	—	21
3.6	Kentucky	1993	—	32	47	21	68	437	2
4.2	Indiana	1993	—	46	23	31	54	1049	2

Vehicle Pass-By Rates by Land Use

Source: ITE *Trip Generation Manual* , 11th Edition

Land Use Code	934
Land Use	Fast-Food Restaurant with Drive-Through Window
Setting	General Urban/Suburban
Time Period	Weekday PM Peak Period
# Data Sites	11
Average Pass-By Rate	55%

Pass-By Characteristics for Individual Sites

GFA (000)	State or Province	Survey Year	# Interviews	Pass-By Trip (%)	Non-Pass-By Trips			Adj Street Peak Hour Volume	Source
					Primary (%)	Diverted (%)	Total (%)		
1.3	Kentucky	1993	—	68	22	10	32	2055	2
1.9	Kentucky	1993	33	67	24	9	33	2447	2
2.8	Florida	1995	47	66	—	—	34	—	30
2.9	Florida	1996	271	41	41	18	59	—	30
3	Kentucky	1993	—	31	31	38	69	4250	2
3.1	Florida	1995	28	71	—	—	29	—	30
3.1	Florida	1996	29	38	—	—	62	—	30
3.2	Florida	1996	202	40	39	21	60	—	30
3.3	—	1996	—	62	—	—	38	—	21
4.2	Indiana	1993	—	56	25	19	44	1632	2
4.3	Florida	1994	304	62	—	—	38	—	30

Graph Look Up

Query | Filter

DATA SOURCE:
Trip Generation Manual, 11th Ed

SEARCH BY LAND USE CODE:
816

LAND USE GROUP:
(800-899) Retail

LAND USE :
816 - Hardware/Paint Store

LAND USE SUBCATEGORY:
All Sites

SETTING/LOCATION:
General Urban/Suburban

INDEPENDENT VARIABLE (IV):
1000 Sq. Ft. GFA

TIME PERIOD:
Weekday

TRIP TYPE:
Vehicle

ENTER IV VALUE TO CALCULATE TRIPS:
40.95 Calculate

Data Plot and Equation

Caution – Small Sample Size

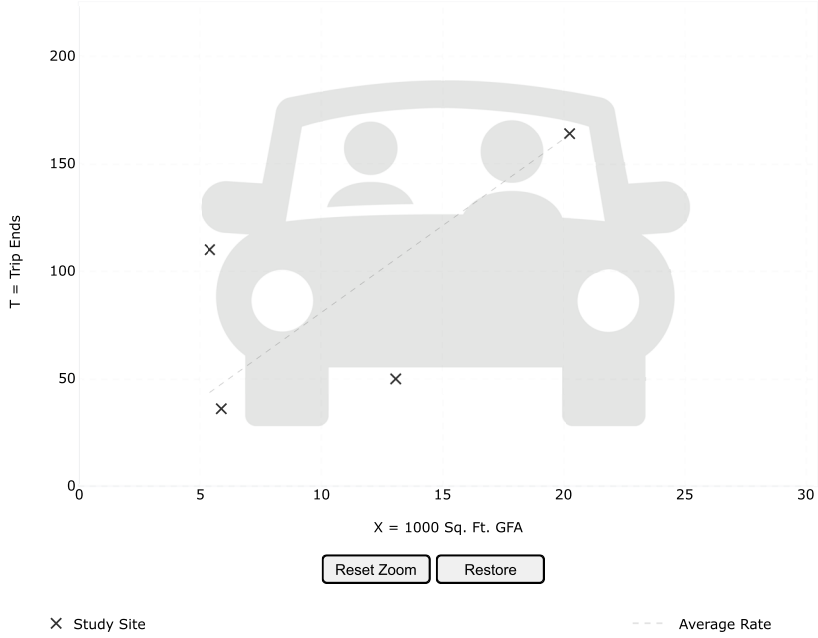

Use the mouse wheel to Zoom Out or Zoom In.
Hover the mouse pointer on data points to view X and T values.

DATA STATISTICS

Land Use:
Hardware/Paint Store (816) Click for Description and Data Plots

Independent Variable:
1000 Sq. Ft. GFA

Time Period:
Weekday

Setting/Location:
General Urban/Suburban

Trip Type:
Vehicle

Number of Studies:
4

Avg. 1000 Sq. Ft. GFA:
11

Average Rate:
8.07

Range of Rates:
3.82 - 20.33

Standard Deviation:
5.66

Fitted Curve Equation:
Not Given

R^2:
****

Directional Distribution:
50% entering, 50% exiting

Calculated Trip Ends:
Average Rate: 330 (Total), 165 (Entry), 165 (Exit)

© COPYRIGHT 2022 | DEVELOPED IN COLLABORATION WITH TRANSOFT SOLUTIONS INC.

Graph Look Up

Query | Filter

DATA SOURCE:
Trip Generation Manual, 11th Ed

SEARCH BY LAND USE CODE:
816

LAND USE GROUP:
(800-899) Retail

LAND USE :
816 - Hardware/Paint Store

LAND USE SUBCATEGORY:
All Sites

SETTING/LOCATION:
General Urban/Suburban

INDEPENDENT VARIABLE (IV):
1000 Sq. Ft. GFA

TIME PERIOD:
Weekday, Peak Hour of Adjacent Street Traffic

TRIP TYPE:
Vehicle

ENTER IV VALUE TO CALCULATE TRIPS:
40.95 Calculate

Data Plot and Equation

Caution – Small Sample Size

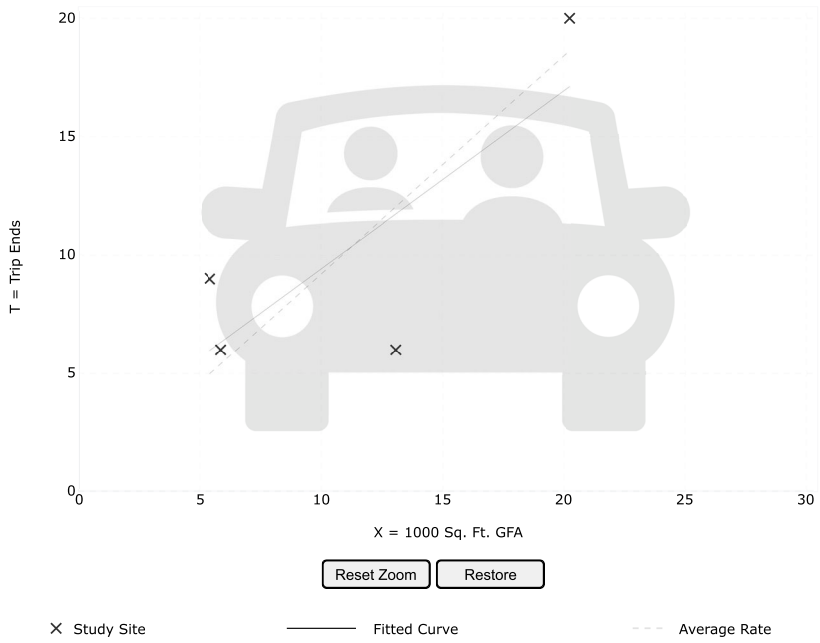

Use the mouse wheel to Zoom Out or Zoom In.
Hover the mouse pointer on data points to view X and T values.

DATA STATISTICS

Land Use:
Hardware/Paint Store (816) Click for Description and Data Plots

Independent Variable:
1000 Sq. Ft. GFA

Time Period:
Weekday
Peak Hour of Adjacent Street Traffic
One Hour Between 7 and 9 a.m.

Setting/Location:
General Urban/Suburban

Trip Type:
Vehicle

Number of Studies:
4

Avg. 1000 Sq. Ft. GFA:
11

Average Rate:
0.92

Range of Rates:
0.46 - 1.66

Standard Deviation:
0.42

Fitted Curve Equation:
$T = 0.75(X) + 1.92$

R^2:
0.62

Directional Distribution:
54% entering, 46% exiting

Calculated Trip Ends:
Average Rate: 38 (Total), 20 (Entry), 18 (Exit)
Fitted Curve: 33 (Total), 18 (Entry), 15 (Exit)

© COPYRIGHT 2022 | DEVELOPED IN COLLABORATION WITH TRANSOFT SOLUTIONS INC.

Graph Look Up

Query | Filter

DATA SOURCE:
Trip Generation Manual, 11th Ed

SEARCH BY LAND USE CODE:
816

LAND USE GROUP:
(800-899) Retail

LAND USE :
816 - Hardware/Paint Store

LAND USE SUBCATEGORY:
All Sites

SETTING/LOCATION:
General Urban/Suburban

INDEPENDENT VARIABLE (IV):
1000 Sq. Ft. GFA

TIME PERIOD:
Weekday, Peak Hour of Adjacent Street Traffic

TRIP TYPE:
Vehicle

ENTER IV VALUE TO CALCULATE TRIPS:
40.95 Calculate

Data Plot and Equation

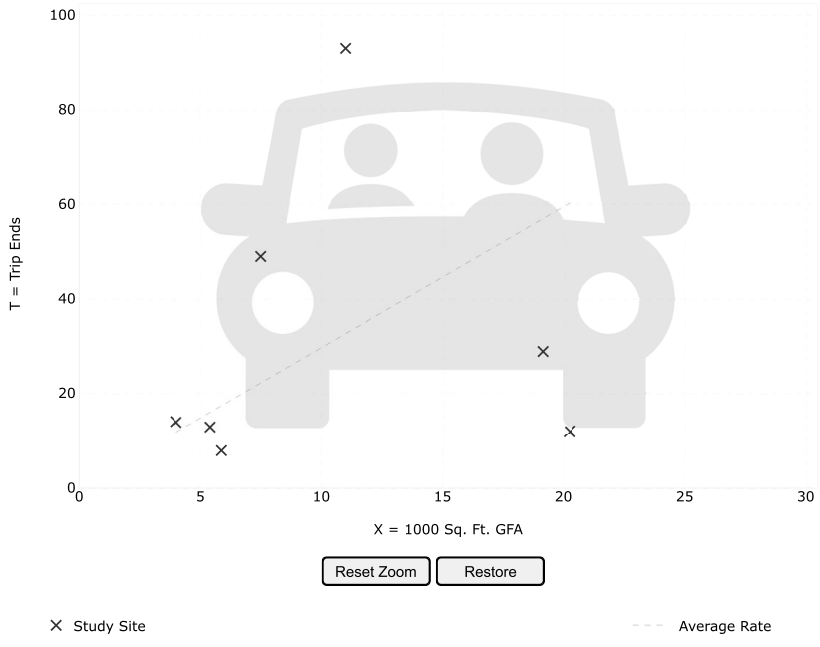

Use the mouse wheel to Zoom Out or Zoom In.
Hover the mouse pointer on data points to view X and T values.

DATA STATISTICS

Land Use:
Hardware/Paint Store (816) Click for Description and Data Plots

Independent Variable:
1000 Sq. Ft. GFA

Time Period:
Weekday
Peak Hour of Adjacent Street Traffic
One Hour Between 4 and 6 p.m.

Setting/Location:
General Urban/Suburban

Trip Type:
Vehicle

Number of Studies:
7

Avg. 1000 Sq. Ft. GFA:
10

Average Rate:
2.98

Range of Rates:
0.59 - 8.45

Standard Deviation:
3.09

Fitted Curve Equation:
Not Given

R^2:
****

Directional Distribution:
46% entering, 54% exiting

Calculated Trip Ends:
Average Rate: 122 (Total), 56 (Entry), 66 (Exit)

© COPYRIGHT 2022 | DEVELOPED IN COLLABORATION WITH TRANSOFT SOLUTIONS INC.

Graph Look Up

Query | Filter

DATA SOURCE:
Trip Generation Manual, 11th Ed

SEARCH BY LAND USE CODE:
816

LAND USE GROUP:
(800-899) Retail

LAND USE :
816 - Hardware/Paint Store

LAND USE SUBCATEGORY:
All Sites

SETTING/LOCATION:
General Urban/Suburban

INDEPENDENT VARIABLE (IV):
1000 Sq. Ft. GFA

TIME PERIOD:
Saturday, Peak Hour of Generator

TRIP TYPE:
Vehicle

ENTER IV VALUE TO CALCULATE TRIPS:
40.95 Calculate

Data Plot and Equation

Caution – Small Sample Size

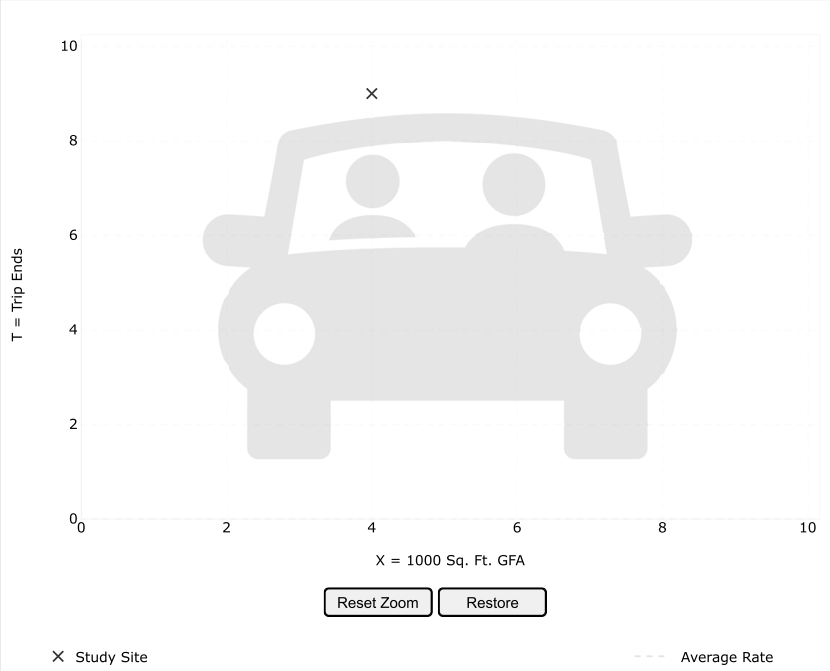

Use the mouse wheel to Zoom Out or Zoom In.
Hover the mouse pointer on data points to view X and T values.

DATA STATISTICS

Land Use:
Hardware/Paint Store (816) Click for Description and Data Plots

Independent Variable:
1000 Sq. Ft. GFA

Time Period:
Saturday
Peak Hour of Generator

Setting/Location:
General Urban/Suburban

Trip Type:
Vehicle

Number of Studies:
1

Avg. 1000 Sq. Ft. GFA:
4

Average Rate:
2.25

Range of Rates:
2.25 - 2.25

Standard Deviation:
****

Fitted Curve Equation:
Not Given

R^2:
****

Directional Distribution:
56% entering, 44% exiting

Calculated Trip Ends:
Average Rate: 92 (Total), 51 (Entry), 41 (Exit)

© COPYRIGHT 2022 | DEVELOPED IN COLLABORATION WITH TRANSOFT SOLUTIONS INC.

DRIVE-THROUGH CALCULATIONS

Drive-Through Calculations

Peak number of vehicles arriving at the Project site for fast casual restaurants: 69 vehicles during the Saturday midday peak-hour, inclusive of pass-by trips.

The number of vehicles bound for Chipotle is prorated based on the square footage of the restaurant vs. the total square footage for all restaurants.

$$\frac{2{,}426\ sf}{4{,}126\ sf} = 0.588\ x\ 69\ vehicles = \sim 41\ vehicles\ bound\ for\ Chipotle$$

According to a QSR Magazine article,[1] approximately 41.6 percent of Chipotle's business are digital sales (i.e., online ordering and delivery), both of which can utilize the Chipotlane, for a conservative 40 percent usage of the drive-through facility.

$$41\ vehicles\ x\ 0.4 = \mathbf{16\ vehicles\ per\ hour\ during\ the\ peak\ hour}$$

[1]*Chipotle Wants to be Clear: It Isn't Opening Drive-Thrus*, QSR (Quick Service Restaurant) Magazine; qsrmagazine.com, June 21, 2022.

505 Pond Street Mixed-Use Development - Weymouth
Vehicle Queue Calculations - Chipotlane
Saturday Midday Peak Hour

Chipotlane Arrival Rate (λ) = **16.0** veh/hr
Service Rate = **2.0** min/veh
Maximum Service Flow Rate at 2.0 min/veh, (μ) = 30 veh/hr

$$\rho = \frac{\lambda}{\mu} = \frac{16.0}{30.0} = 0.53$$

Vehicle Queue	Chipotlane Vehicle Queue Probability		Cumulative Probability	
0	p{0} = 1 - ρ =	0.467	0.467	
1	p{1} = p{0} * ρ^1 =	0.249	0.716	50th Percentile Vehicle Queue 1 to 2 Vehicles
2	p{2} = p{0} * ρ^2 =	0.133	0.848	
3	p{3} = p{0} * ρ^3 =	0.071	0.919	
4	p{4} = p{0} * ρ^4 =	0.038	0.957	95th Percentile Vehicle Queue 3 to 4 Vehicles
5	p{5} = p{0} * ρ^5 =	0.020	0.977	
6	p{6} = p{0} * ρ^6 =	0.011	0.988	
7	p{7} = p{0} * ρ^7 =	0.006	0.993	
8	p{8} = p{0} * ρ^8 =	0.003	0.997	
9	p{9} = p{0} * ρ^9 =	0.002	0.998	
10	p{10} = p{0} * ρ^{10} =	0.001	0.999	
11	p{11} = p{0} * ρ^{11} =	0.000	0.999	
12	p{12} = p{0} * ρ^{12} =	0.000	1.000	
13	p{13} = p{0} * ρ^{13} =	0.000	1.000	
14	p{14} = p{0} * ρ^{14} =	0.000	1.000	
15	p{15} = p{0} * ρ^{15} =	0.000	1.000	
16	p{16} = p{0} * ρ^{16} =	0.000	1.000	
17	p{17} = p{0} * ρ^{17} =	0.000	1.000	
18	p{18} = p{0} * ρ^{18} =	0.000	1.000	
19	p{19} = p{0} * ρ^{19} =	0.000	1.000	
20	p{20} = p{0} * ρ^{20} =	0.000	1.000	
21	p{21} = p{0} * ρ^{21} =	0.000	1.000	
22	p{22} = p{0} * ρ^{22} =	0.000	1.000	
23	p{23} = p{0} * ρ^{23} =	0.000	1.000	
24	p{24} = p{0} * ρ^{24} =	0.000	1.000	
25	p{25} = p{0} * ρ^{25} =	0.000	1.000	
26	p{26} = p{0} * ρ^{26} =	0.000	1.000	
27	p{27} = p{0} * ρ^{27} =	0.000	1.000	
28	p{28} = p{0} * ρ^{28} =	0.000	1.000	
29	p{29} = p{0} * ρ^{29} =	0.000	1.000	
30	p{30} = p{0} * ρ^{30} =	0.000	1.000	
31	p{31} = p{0} * ρ^{31} =	0.000	1.000	
32	p{32} = p{0} * ρ^{32} =	0.000	1.000	
33	p{33} = p{0} * ρ^{33} =	0.000	1.000	
34	p{34} = p{0} * ρ^{34} =	0.000	1.000	
35	p{35} = p{0} * ρ^{35} =	0.000	1.000	

Average Vehicle Queue for Chipotlane = 2 Vehicle

95th Percentile Vehicle Queue for Chipotlane = 4 Vehicles

Chipotle Wants to be Clear: It Isn't Opening Drive-Thrus

What makes the "Chipotlane" different is where the brand's growth story is unfolding.

WEB EXCLUSIVES | JUNE 21, 2022 | DANNY KLEIN

CHIPOTLE

Chipotlanes made up more than 80 percent of the chain's growth in 2021. The same will be true this year.

Chipotle's digital order-ahead pickup windows are far from a case study at this point. Of the brand's 174 openings last year, 81 percent included a "Chipotlane." The chain began testing the earlier generation in late 2018. Viewed as a precursor to what might become a full-on drive-thru, Chipotle changed course when early pilots showed customers could roll through in as little as 12 seconds. And now, there are north of 350 systemwide—a number that's ready to balloon in 2022, as more than 80 percent of Chipotle's projected 235–250 openings are expected to feature one.

The chain claims it was the first national restaurant to launch such a model, where customers tap orders on mobile or digital devices (no menuboard) and drive up to the access point. Without debate, however, it's hardly the only standing. Chains from Noodles & Company to Sweetgreen followed suit, and the field keeps crowding.

But whatever you do at this stage, don't call the Chipotlane a "drive-thru," Tabassum Zalotrawala, Chipotle's chief development officer says. "I refuse," she notes. "It is a pickup lane."

MORE ON CHIPOTLE:

Chipotle's Focus Turns to Career Advancement for Workers

How Chipotle is Addressing the Industry's Turnover Crisis

Chipotle is Headed to a Small Town Near You

This is more than just semantics. In recent months, Zalotrawala says it's been "hard work" explaining to cities, municipalities, and developers why the format should be characterized differently than the classic fast-food staple. And why, in turn, markets should rethink how they view Chipotle either building one or converting existing stores to include it.

Unlike traditional drive-thrus, Chipotlanes don't include clearance bars, menuboards, or multiple windows as you might see (one to order, another to pick up). "We have none of that," Zalotrawala says. "Ours is a very clean operation where you're not going to have any kind of noise pollution that comes with those loud speakerphones at the menuboard."

There isn't excessive signage—enter, exit, drive-thru ahead cues—either. Yet most importantly, Zalotrawala says, Chipotlanes don't jam traffic. Today, the brand clocks transactions through the point at "no more than 30 seconds." The difference, naturally, being customers paid online and are there only to collect. Chipotlanes boast a stack of about three to four cars. "Versus the 30-car stack that I'm sure you've seen at other peers," she says.

"And sometimes cities have a great point," Zalotrawala adds. "You don't want this to become a traffic nuisance within the shopping center, or spill out onto the road. I understand all of that. But I think if it's done well, if it's planned properly, it only creates more convenience for your constituents. We'll keep fighting the good fight."

This has been a constant line for Chipotle as it readies for growth. In February, CEO Brian Niccol told investors the brand now believes it can operate at least 7,000 stores across North America, up from prior projections of 6,000. Chipotlanes are a big ticket on that path. They produce higher volume than traditional stores—sales as much as 15 percent above—skew toward digital (namely higher-margin takeout versus delivery), and generate cash-on-cash returns in the 65–70 percent range within a couple of years. Chipotlanes unlock the company's aim to eventually sail $3 million average-unit volumes. In Q4, AUVs were up to $2.641 million from $2.223 million two years ago.

RECENT NEWS

Mici Italian Unveils Rebranded Store Design

Popeyes to Give Out Free Chicken Sandwiches on Fridays through Grubhub

PLNT Burger Opens Three Units in New York City

Tijuana Flats Announces Lineup of Daily Specials

Little Caesars Eyes At Least 16 Restaurants in Hawaii

Juice It Up! Opens First Santa Barbara County Location

SUBSCRIBE TO A.M. JOLT

The five times weekly e-newsletter that keeps you up-to-date on the latest industry news and additions to this website.

Your Email Address

Zip Code

Subscribe

CHIPOTLE

"I think we're going to continue innovating around these formats with the idea of, or the goal really, of extending access and convenience," Zalotrawala says.

And they're also a direct answer to Chipotle's changing guest. Digital sales represented 41.6 percent of the business last quarter, which amounts to $811 million, of which 20 percent owes to delivery. Chipotle's full-year 2021 digital sales of $3.4 billion was nearly three-and-half times what it was pre-COVID.

Lastly, the brand has found success opening in "small" markets of about 40,000 or so people. These lend themselves to Chipotlanes, too, and the ability to deliver unit economics at or better than traditional stores, Niccol said. Given lower lease costs, as well as a higher success rate in staffing, the fact there's no trade-off in volume has opened up the map for Chipotle. Niccol said North America offers "hundreds of these" Chipotle can find and build in, including even smaller areas near or off expressways. Essentially, restaurants not in major metros.

Zalotrawala says Chipotle is taking a "really keen look" at its real estate portfolio as all these dynamics unfold. One, it's identifying existing locations that can support a Chipotlane and create that access point. Secondly, it's working to find existing stores that could use a relocation where the brand can tack a Chipotlane on. And thirdly, there's an overarching new restaurant strategy around ways the company can add a Chipotlane. The fast casual will do about 12 conversions this year.

But to Zalotrawala's latter outline, the Chipotlane's success has begun to cascade into other development blueprints. In June, the brand opened a walk-up window at its Gainesville, Florida, University Avenue location. Chipotle tested a walk-up window late 2019 in Chicago.

Zalotrawala says Chipotle viewed the opportunity not unlike how it's tracking Chipotlanes. "I think the whole idea is conceived from creating more access and convenience for customers," she says.

Here, the chain began to run into more urban areas where "you absolutely cannot have a vehicular lane," Zalotrawala says. Or jurisdictions where local authorities won't green light a drive-thru.

SMART CHAIN REPORTS

On the Safe Side

The Drive Thru of the Future

Sign of the Times (Digital Signage)

The Power of POS

The Power of Packaging

Spotlight on Safety

Kitchen Tech

Tackling Takeout (Off-Premises Solutions)

COMMUNICATION SYSTEMS

REACHIFY - AUTOMATED RESTAURANT PHONES

REACHIFY®

13280 Evening Creek Drive South, Suite 225
San Diego
, CA
800-215-0522

Focus on the food, not the phone call. Let phone automations take care of all your (MORE)

KITCHEN EQUIPMENT, WORKSPACE EQUIPMENT & COMPONENTS

SNAPSPACE SOLUTIONS INC.

SnapSpace SOLUTIONS

55 Baker Blvd., Suite 201
Brewer
, ME
207-947-9327

Ghost/Host kitchen manufacturer using shipping containers for cost savings and (MORE)

DRIVE THRU SYSTEMS

HME | HOSPITALITY &

And so, Chipotle devised a Chipotlane for foot traffic. As Zalotrawala calls it, "the human lane."

Akin to Chipotlanes, customers order ahead. They walk up and show a receipt. There's even a bell in case an employee is not present at the window. Zalotrawala explains that's seldom the case.

The Chicago store proved effective, she adds, since guests appreciate the convenience and the in-store queue became less congested.

With the Gainesville store, Chipotle soft-opened its window add-on. There's a sign inside consumers can see and employees will suggest the option. But, generally, it's a pretty intuitive feature that doesn't take a lot to sell, she says. One guest uses it and tells another. Somebody walking in and grabbing off a shelf notices the window and asks about it.

Chipotle does, however, plan to boost awareness by firing off a blast to customers within a 3-mile radius of the restaurant. Those who have the app will receive a notification that it's live. There will be other "freebies" or marketing-related actions to "create the buzz and have people take note that something new has happened to their existing Chipotle," Zalotrawala says.

Walk-up windows are, for all intents and purposes, subsets of Chipotlanes. The brand was able to add the Gainesville one without closing the store as well, which Zalotrawala says is a critical driver when looking at this model on a go-forward basis.

The inside feels just like a Chipotlane would. There's the digital makeline in addition to the front, situated near the walk-up window/Chipotlane area. So crew members can prepare digital orders and hand them out. There's no cash collected. No point-of-sale. Beverages are set up.

"We'll really be looking at what happens with the sales, what happens with the transactions, and, honestly, what happens with customer satisfaction," Zalotrawala says.

Like traditional Chipotlanes (there is a Chipotlane-only unit that opened in Cuyahoga Falls, Ohio), the walk-up window isn't a swap. There's still a dining room. Customers can get in line as usual. If they want, they can also go inside and grab from pickup shelves. One reason Chipotle kept those, Zalotrawala says, is for larger orders and catering pickup. "It's a better place to fit those boxes in," she says.

SPECIALTY COMMUNICATIONS

HME HOSPITALITY & SPECIALTY COMMUNICATIONS ®

2848 Whiptail Loop
Carlsbad
, CA
858-535-6000

HME is celebrating 50 years as a leading provider of innovative communication (MORE)

SUPPLY CHAIN MANAGEMENT

TRADETRANS CORP

TRADETRANS

173 Black Meadow Road
Chester
, NY
845-469-1000

From purchasing to U.S export distribution to warehousing, TradeTrans simplifies the (MORE)

Find restaurant equipment and suppliers

Start Now!

CHIPOTLE

Chipotle's pickup-lane restaurant in Ohio might not be its last such build.

Even though Chipotle was able to build the window without pausing operations, it was still a "mammoth task," Zalotrawala says. Conversions are a unique slice of development since contractors aren't working day in and out without an active operation. "You've got to identify all of the pieces and all of the support functions that get impacted by the construction," she says.

Also, not all general contractors are suited for conversion projects. "For the plan to really work, you're doing the remodel in sections to the extent that you may close down a part of the dining room to accommodate your construction crew and the work that they're doing," Zalotrawala says. "You may move some of the equipment around in the kitchen and quarter off a part of it to create that window." And Chipotle tries to create "construction time zones" where crews build during off hours—at night and early mornings.

For the most part, when Chipotle converts to Chipotlanes, it's a bump out from the existing footprint of the building, which helps the process.

Zalotrawala says Chipotle chose to spread the timeline (two versus one week) in favor of shutting down and reopening with the window. "[That would mean] you lose sales for a week. You lose customers for a week. They change habits very, very quickly because there's just that many choices out there," she says. "We choose not to do that for that exact reason. Let's keep our staff employed. Let's keep our customers going. Let them keep their habits and work around it."

As the walk-up window shows, Chipotle will continue to find ways to provide additional access as it expands. In markets where the brand might not have needed another store before, it can now drop a complementary piece to extract additional trade dollars, or support its digital business. In fall 2020, it debuted a digital-only store just outside the gate of the military academy in Highland Falls, New York. Called "Chipotle Digital Kitchen," the store offers pickup and delivery without a dining room. It's not a ghost kitchen, however. Customers walk in and order/pickup. It's not a hub for off-premises fulfillment, either, as much as it's a reimagined model to get food to guests.

The Chipotlane-only Ohio unit was a conversion of an existing bank. It enables guests and delivery drivers to collect digital orders through the Chipotlane or walk-up window. There's also a patio for guests to sit and eat. "We didn't build this from scratch," Zalotrawala says. "So in many ways it's a conversion. And it's a

smaller location that identified that in the middle of three extremely high-volume restaurants."

"I think we're going to continue innovating around these formats with the idea of, or the goal really, of extending access and convenience," she adds. "And walk-up window formats is just one other way we do it."

READ MORE

CHIPOTLE MEXICAN GRILL

CUSTOMER EXPERIENCE

DESIGN

FAST CASUAL

RESTAURANT OPERATIONS

MARKETING & PROMOTIONS

How Lean Restaurant Teams Maximize Marketing Resources

How Kristin Tormey Elevated Wendy's to Influencer Status

How Chipotle's Candice Beck Builds Social Media Relevancy

CONSUMER TRENDS

Is a Recession Coming for Restaurants?

Fast-Food Brands Brave the NFT World

Restaurant Industry's Sales Recovery Slows in May

MENU INNOVATIONS

Your Menu is Your Best Marketing Tool—Here's How to Use It

Wendy's Places Summer Spin on Iconic Frosty

Inside Breakfast's Record-Breaking COVID Comeback

EMERGING CONCEPTS

How Smokin' Oak is Building its Own Pizza Category

Rakuten Ready 2020 Time Study

A compelling look at how top Restaurants, Retailers, and Grocers are delivering on the Order for Pickup experience.

Rakuten Ready

Table of Contents

EXECUTIVE SUMMARY · · · 1

COVID-19 IGNITED A TIDAL WAVE OF DEMAND FOR PICKUP ORDERS · · · 4

THE VALUE OF TIME · · · 6

THE 2020 ~~EXPERIMENT~~ EXPERIENCE · · · 8

SLOW → LOSS OF CUSTOMERS · · · 9

THE IN-STORE PICKUP EXPERIENCE · · · 10

THE CURBSIDE PICKUP EXPERIENCE · · · 14

THE DRIVE-THRU PICKUP EXPERIENCE · · · 18

WHY THIS ALL MATTERS · · · 19

BEST PRACTICES · · · 20

KEY TAKEAWAYS · · · 26

THE ORDER FOR PICKUP SOLUTION · · · 27

METHODOLOGY · · · 28

Rakuten Ready

Executive Summary

Early 2020... a point in history where our world was upended by a global pandemic, forcing much of the world to be sheltered in place. And while consumers were stuck at home, out of necessity they began using online Order for Pickup more than ever, leading to historical growth for this channel.

It was against that backdrop that Rakuten Ready had begun gathering data for our 2020 Time Study. We too laughed at the idea of conducting our annual study...UNTIL we realized:

>200%

increase in Order for Pickup volume since the pandemic really hit in March 2020

>85%

of Order for Pickup customers plan to continue using the service post-COVID-19

There has never been a better time to measure customer satisfaction in pickup experiences, than when more people than ever were ordering. So we marched forward with our second annual Rakuten Ready Time Study, which serves as a real-time look at how top Restaurants, Retailers, and Grocers are delivering on the online Order for Pickup experience across wait times and customer satisfaction (or CSAT).

The field research conducted for this study had secret shoppers taking shopping trips, while collecting all data points, from May - August 2020. The result was nearly 500 trips with shoppers across 11 major metropolitan areas, from 6 different states (see page 28 for more detailed methodology).

The Rakuten Ready 2020 Time Study Reveals:

- → **The brands that shined with Order for Pickup and those with opportunities to improve**
- → **The experience variance between in-store pickup vs. curbside vs. drive thru**
- → **The most important Order for Pickup attributes driving customer satisfaction**
- → **What the future of online Order for Pickup should look like**

Types of Pickup Services Measured in this Study

All orders were placed online or in the app, then shoppers selected one of the following fulfillment methods:

IN-STORE PICKUP

Customers pickup the order inside the store

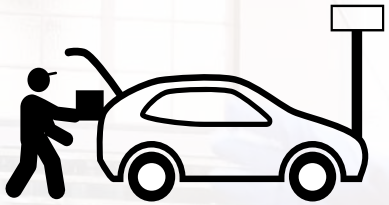

CURBSIDE

Customers park and the order is brought to them in their car

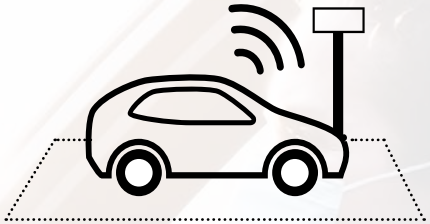

DRIVE-THRU

Customers stay in their vehicle while driving through a line to get their order

Order for Pickup Benchmark

Our 2019 Time Study showed that customers who wait under 2 minutes for their order are 4X more likely to repeat purchase.

In this 2020 report, we will compare secret shopper experiences this year vs last year. COVID-19, surprisingly, did not impact the 2-minute benchmark against CSAT; in 2020, like last year, CSAT decreased as wait times spanned greater than 2 minutes.

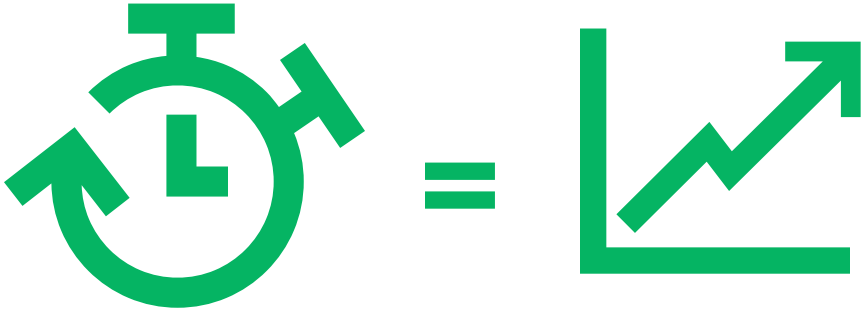

UNDER 2 MINUTES

4X MORE LIKELY TO BE REPEAT CUSTOMER

"A great user experience is about simplicity, ease of use and removing friction for the customer. It's important to stay true to the experience that you want to deliver and don't overcomplicate things. Really define who your customer is and stay focused on that."

- Nicole West, Vice President of Digital and Product, Chipotle

COVID-19 Ignited a Tidal Wave of Demand for Pickup Orders

Before the pandemic hit, online Order for Pickup had already begun growing in popularity and growing at a much more rapid pace than delivery (given delivery has already hit significant adoption).

But starting in March 2020, when most retailers and restaurants were shut down and access to essential goods at grocery stores were getting more challenging, necessity accelerated growth of Order for Pickup by over 200%, across the three industries.

ORDER FOR PICKUP COMPOUND ANNUAL GROWTH RATE
4X FASTER THAN DELIVERY

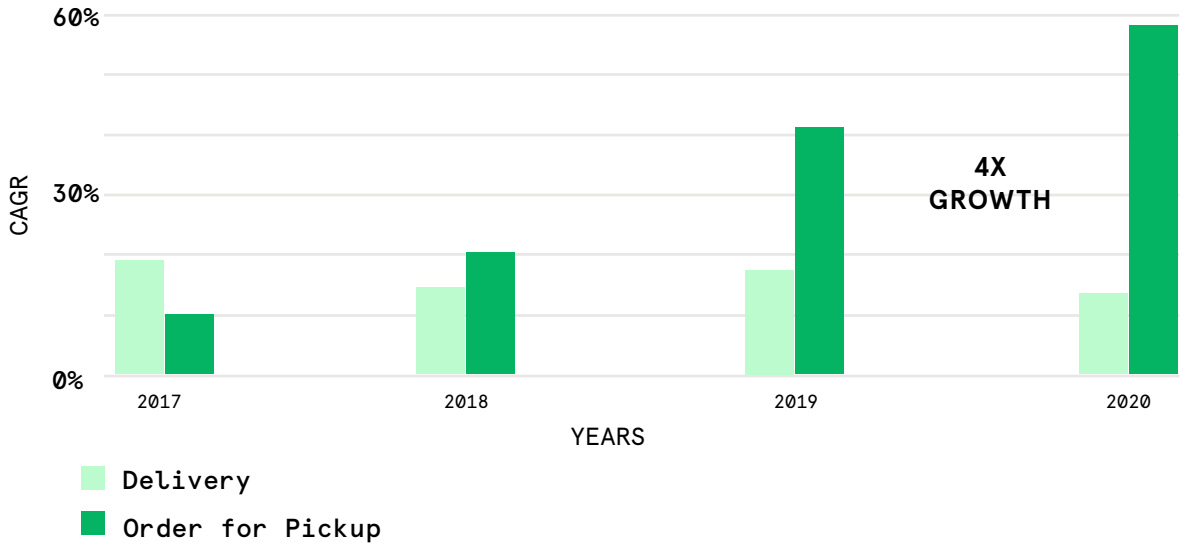

Source: BI Intelligence / Statista 'Platform to Consumer Delivery'

Rakuten Ready

Grocers saw a surge of order volume as customers were not only forced to cook at home exponentially more, but they were also hoarding. Grocers excelled at pivoting to the needs of consumers by prioritizing resources for in-store or curbside pickup.

As restaurants were slowly able to open for takeout only, they too were met with the challenge of having to rethink how they engage their customers, while also refining their operations.

A major lesson learned for businesses of all sizes:

Digital-First is the first step to future-proofing your business.

Bridging the gap between online and offline with a customer experience that meets their needs, is the path to long-term growth.

ORDER FOR PICKUP GROWTH TREND ACROSS TOP RETAIL, GROCERY AND RESTAURANT MERCHANTS

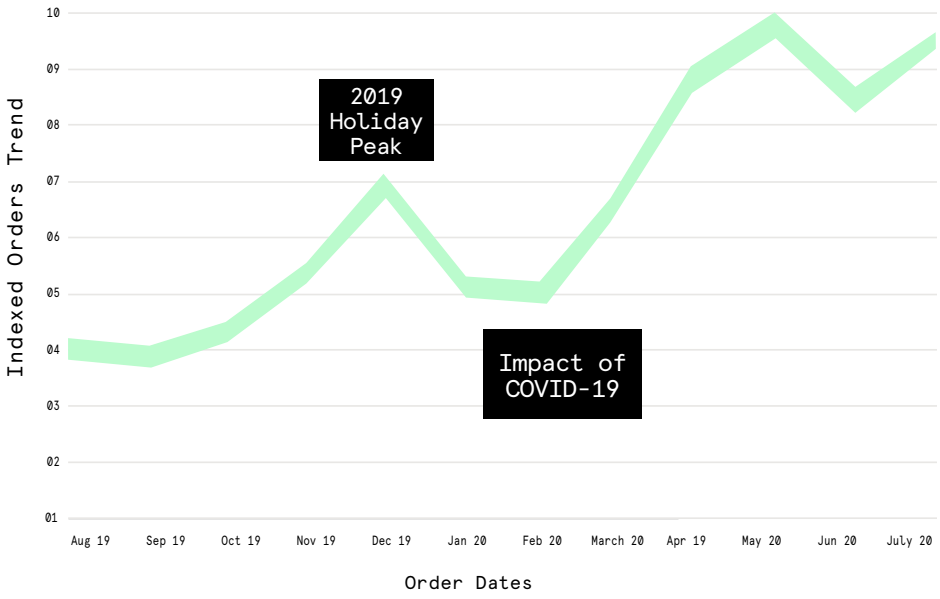

Source: Rakuten Intelligence
(Monthly Order Volume, Click and Collect, Aug 19 - Jul 20)

The Value of Time

Order for Pickup is where offline meets online with an experience that comes with huge customer expectations.

> *"The value of every minute is at an all-time high, as school has restarted for the most part across the country, from home. Parents often with full-time jobs have the additional pressure to find time to help their children excel in an ever growing competitive global market. Time is now one's most valuable asset and spending it shopping is not an option."*
>
> *- Dr. Kirthi Kalyanam, L.J. Skaggs Distinguished Professor and Executive Director of the Retail Management Institute, Santa Clara University*

Gone are the early pandemic days of making sourdough and organizing every inch of the house; today, every minute is maxed out by work, school and downtime - and consumers are more sensitive than ever about their safety and how any minute outside of their home is spent.

Consumers are most comfortable ordering from merchants that make them feel safe by prioritizing contactless experiences, which is why, last quarter, Rakuten Ready released our Contactless Playbook - to arm merchants with the protocols and experience attributes that mattered most to their customers.

The theme you will see throughout this study is that wait time and safety are, due to COVID-19, intrinsically intertwined.

MOBILE
ORDER
PICKUP
AHEAD

The 2020 ~~Experiment~~ Experience

Being in the middle of a pandemic, we hypothesized that brands with spikes in volume would not perform well, that curbside pickup experiences were going to be a mess, and that more brands would move toward an unattended in-store pickup model to create throughput to deliver more contactless experiences. We also worried the data would deliver unreliable results, so our field testing started more like an experiment, with our team expecting we might need to pause research and pick-up again in 2021. Boy, were we wrong on many fronts!

We were surprised to see consistent experiences and customer satisfaction scores across the nation. We were doubly surprised that grocers were amongst the top performers in curbside pickup, unattended in-store pickup seemed to drop in availability, and contactless fulfillment was not a consistent experience across brands.

What we thought was going to be an experiment that would require pausing, turned into hundreds of shopping and takeout experiences that delivered clear learnings and insights, resulting in the...

Rakuten Ready Time Study 2020.

Slow → Loss of Customers

First, let's set a little context around why we are focusing on Order for Pickup. For brands that can execute a superior Order for Pickup experience, it is an opportunity to accelerate growth at a pace not thought possible prior to early 2020, as it:

1. **Is the most cost effective channel**
2. **Increases operational efficiency, allowing higher throughput**
3. **Lowers wait times leading to more frequent, loyal customers**
4. **Improves margins by decreasing delivery costs**

The insights from our study support the case for prioritizing Order for Pickup, as quickly as possible and as a focus channel for future growth.

So let's dig in...

"The demand for pickup will only continue to increase even in a post-pandemic world. The opportunity for growth is tremendous. Yes, some businesses struggled in the beginning of the pandemic, but those who redefine their Order for Pickup operations will reap the benefits in the long run."

– Jaron Waldman, Co-Founder and CEO, Rakuten Ready

The In-Store Pickup Experience

Ordering ahead for in-store pickup delivered the fastest and most efficient experiences. In 2020, QSRs were the only "brands that successfully beat the 2-minute wait time benchmark in this category.

Among big box retailers, Target and Walmart Retail (who performed quite well last year at less than 4 minutes) were quite impacted by demand and were, unfortunately, not able to deliver the experience that their customers expected, with wait times over 7 minutes.

IN-STORE PICKUP EXPERIENCE

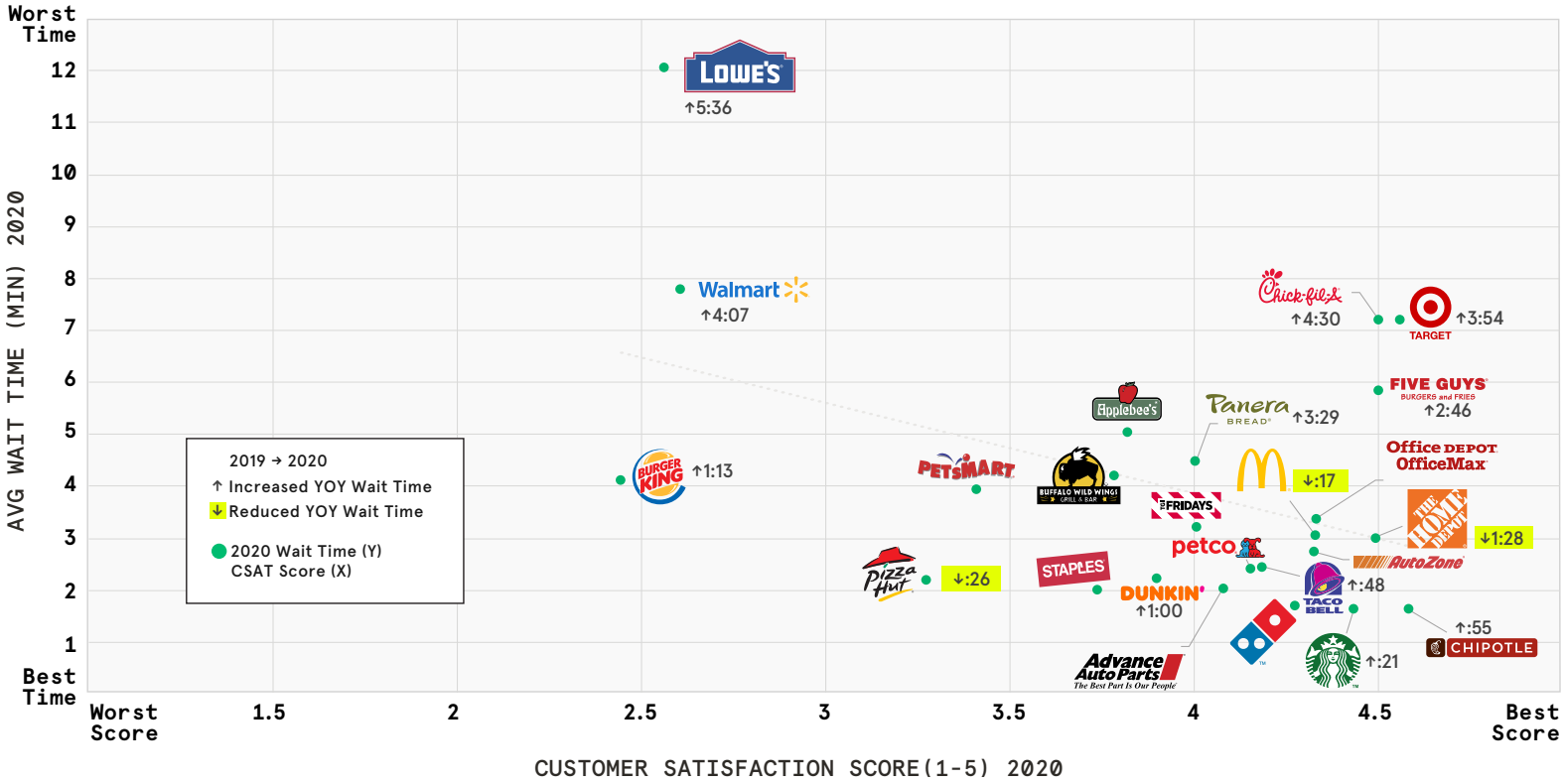

Rakuten Ready

Quick-Serve Restaurants (QSRs)

QSRs, operating with a business model built around tight order fulfillment standards - thrived in their shift to being exclusively takeout, and generally excelled in timing their orders to customer arrivals with an average wait time of 3:10.

Chipotle dominated in wait time both in 2020 (1:34) and last year (:39). They rely on cooking orders right away and placing orders on shelves, for unattended in-restaurant pickup and this experience (while occasionally resulting in colder food) was consistently fast with some of our highest CSAT scores.

> *"At Chipotle, my order was already ready when i got there, on a dedicated shelf, so I didn't have to interact with, or get close to anybody."*

The biggest surprise? Chick-Fil-A, coming in nearly 3x slower than 2019 (2:39 vs 7:10 this year). For Chick-Fil-A, the challenge was higher demand than ever but surprisingly, their CSAT scores were not impacted by their long wait times as, like last year, the appeal of the brand appears to have made customers overlook the long wait times.

> *"While I waited a really long time, Chick-Fil-A's staff was very nice and their safety protocols made me feel comfortable, even with the long wait."*

Casual Dining

We added a new category this year with casual dining restaurants – TGIF, Applebees, Buffalo Wild Wings, and Panera – had an average wait time of 4:11. TGIF (3:09) delivered the best experience across the category, yet Panera received the best customer satisfaction score.

Interviews indicate that our secret shoppers most appreciated Panera due to the unattended, contactless fulfillment experience, similar to Chipotle's.

> *"The experience at Panera was great because it was so fast and easy. Their Rapid Pickup option had my order ready when I arrived, sitting unattended, so I was able to quickly grab and go – didn't have to go near anyone."*

Retail

Retailers had an average wait time of 4:39 - however, the longest wait times and lowest CSAT scores also fell under the retail category. **Petco and Advanced Auto Parts performed well, while Lowes and Walmart Retail delivered the longest wait times and worst CSAT scores.**

In 2019, Walmart Retail and Target had average wait times in the 3:00 range, with relatively strong CSAT scores. In 2020, both more than doubled their wait times and had much lower satisfaction scores. This is surprising given the process, marketing, and technology investments the two brands have made in recent years in their Order for Pickup programs.

> *"My wait at Target was unnecessarily long. I went to one where the online pickup line was the same line for returns which made the wait so long."*

> *"Walmart took so long. It was an awful experience. There was only one person helping to manage it. Next time, I will not order for pickup again. I told them I was on my way 20 minutes prior, but I still stood in line for 15 minutes."*

With spikes in home improvement projects during shelters-in-place, Lowes and Home Depot also faced dramatic increases in demand - but **Home Depot shined and was able to deliver year over year improvements in wait time by almost 40%, with clear increases in CSAT, as well.**

> *"The Home Depot pickup lockers were great and made the process very fast. It was also clear when I got my confirmation how to use the locker. I really liked it."*

Unfortunately, Lowe's is still struggling, as it had the longest wait times in 2019 and again in 2020, while also receiving the lowest CSAT scores and some of the most 'aggressive' feedback.

> *"Lowe's was the worst - I just got a bug killer! I had to wait in the same line as the return line and it seemed like every return took 10 minutes. My order wasn't even in the front or ready to go - it was in the back of the store and it took awhile for them to locate it."*

The Curbside Pickup Experience

The Curbside Pickup experience is more popular than ever. Many brands had to implement a Curbside program very quickly in response to COVID-19 demand. However, the Curbside Pickup channel adds operational complexity and requires technology to execute well.

This year, none of the brands - except for Walmart Grocery, who averaged a wait time of 2:06 (not below 2 minutes, but close enough) - were able to deliver consistent curbside order fulfillment near the 2 minute benchmark.

CURSIDE PICKUP EXPERIENCE

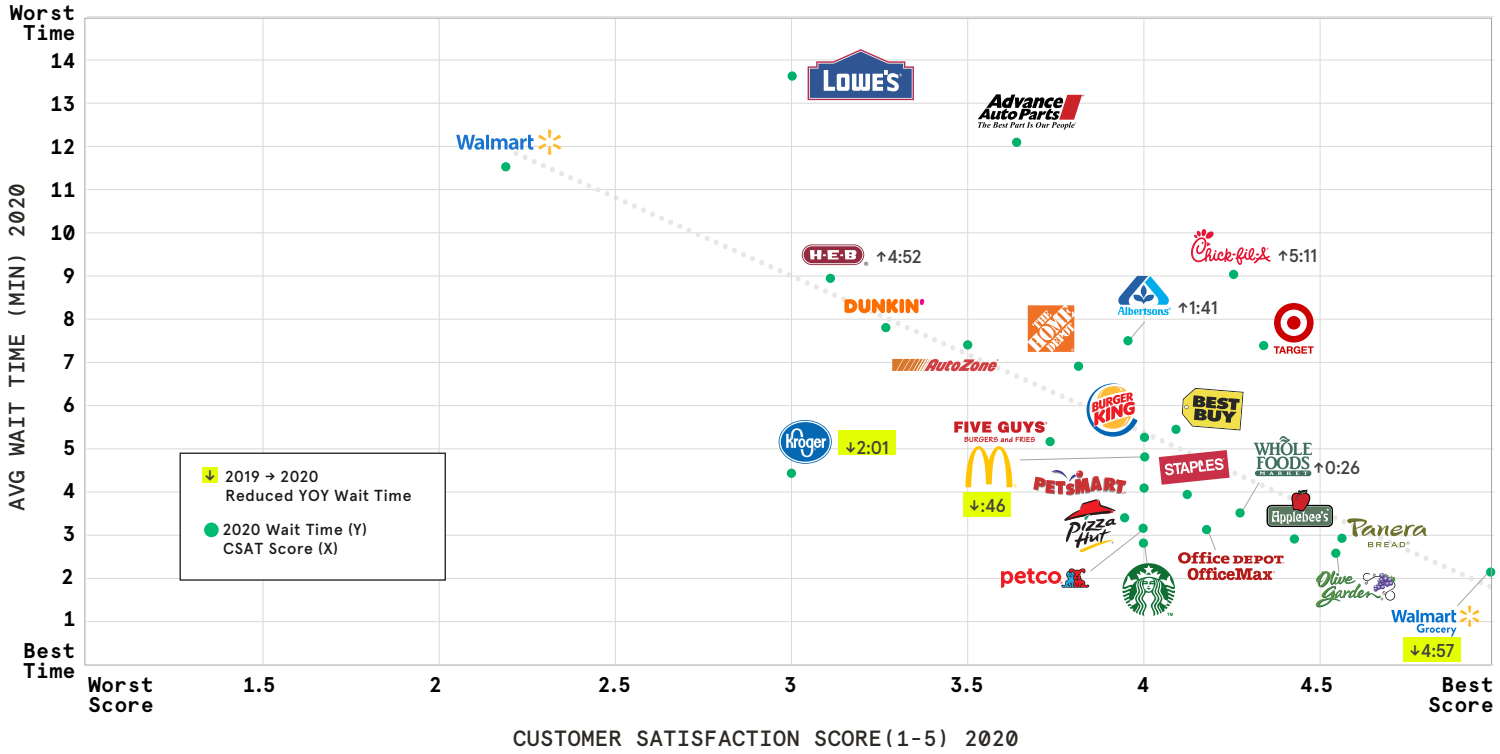

Rakuten Ready

Quick-Serve Restaurants (QSRs)

While speed is the nucleus of operations for QSRs, that was not demonstrated in curbside pickups this year. The big surprise was Quick-Serve Restaurants were slower in delivering curbside handoffs than Casual Dining.

New operations and safety protocols were needed to immediately expand - which required training, technology and operations solutions when designated parking spots were hard to create or volume increased significantly, to name just a couple challenges.

Amidst the challenges, Starbucks (2:51) and Pizza Hut (3:21) performed the best in wait times while also receiving good CSAT scores. Starbucks had a consistently easy and positive experience across all trips.

> *"My Starbucks curbside pickup was great! They had plenty of parking spots and my order was ready when I arrived."*

Pizza Hut - while performing well with wait times - had a process that was sometimes confusing and/or not what was promised, which may have created a bit of a lower CSAT rating.

> *"Pizza Hut's contactless curbside pickup was none of that; I had to go inside and touch their payment pad amongst another customer who was not masked."*

McDonalds was 14% faster year over year; while Chick-Fil-A, unfortunately, more than doubled their wait times since last year, resulting in a curbside average wait time of 9:01. But again, Chick-Fil-A's pickup wait times and customer experience did not significantly impact their CSAT score, likely due to the strength of their brand.

Casual Dining

Casual Dining, as mentioned previously, delivered faster times on average vs QSR. This was a surprise, as they were shifting completely away from the majority of their dine-in business. Given that, they still delivered consistent, highly-rated curbside experiences.

While Olive Garden had the fastest wait time (2:39), their high CSAT score was beaten by Panera. Ultimately, all three casual dining restaurants - Olive Garden, Panera, and Applebees - delivered strong experiences that made their customers wait, on average, less than 3 minutes.

Retail

Retail represented the lowest-rated curbside pickup experiences amongst our shoppers. **Office Depot, Staples, and Best Buy came out with the best retail CSAT ratings,** while Walmart Retail and Lowe's well exceeded wait time benchmarks across most shopping experiences.

Petco (3:07), Office Depot (3:10) and Staples (3:57) performed best with average wait times below 4 minutes.

> *"At Petco, they picked up the phone right away, came out quickly and were very friendly."*

Lowe's, Advance Auto Parts, and Walmart Retail had the longest curbside wait times, and the experiences left our shoppers frustrated.

> *"I will never ever shop online for pickup with Lowe's again. In fact, I'm pretty soured on Lowe's as a brand after this experience... might be worth driving a bit further to their competition"*

> *"I arrived at Walmart and called the number - a few times - but no one answered. So I went into the store, spoke to multiple workers, but no one could help me. I went outside and tried again - a few times, when they finally brought out my order. Defeated the whole purpose of ordering online for curbside pickup"*

Grocery

Grocers were challenged by a large volume of curbside pickup never experienced before. Given the complexity in preparing grocery orders, we would have expected curbside fulfillment to take drastically longer this year; our data proved otherwise, the average wait time this year for curbside pickup was 5:07 compared to 5:21 in 2019.

Walmart Grocery and Whole Foods were the fastest and both had strong CSAT ratings. Whole Foods was solid both last year (3:04) and this year (3:30), while Walmart Grocery improved significantly in 2020, with a wait time of 2:06 vs. 7:03 in 2019.

One of the biggest surprises was that Walmart Grocery executed their curbside service so well, while Walmart Retail delivered one of the longest wait times and lowest CSAT scores. It appears that there is an opportunity for Walmart Retail to optimize their operations by taking some of their standard procedures from grocery fulfillment and extend them to their retail pickup program.

H-E-B and Albertsons were the slowest. H-E-B (8:57) had the highest wait time which was 120% higher than 2019, but Albertsons (though their CSAT score doesn't reflect this) received harsher feedback from all shoppers.

"Albertsons curbside parking spots were very hard to find. When I called the store to let them know I had arrived, it took many calls until they picked up. And when they did, it took a long time for them to give me an ETA. I had selected a pickup window, so not sure why there was so much confusion. The delays caused me to get my order outside of my pickup window - never doing this again."

The Drive-Thru Experience

Ordering online for pickup through the drive-thru lane is the next great opportunity for restaurants. Online orders picked up in designated drive-thru lanes exponentially increases throughput, decreases congestion in standard drive-thru lanes, while providing a faster, safer, and more seamless alternative.

Chipotle was the most unique - with their 'Chipotlanes' - designated drive-thru lanes for picking up online orders. This new channel performed the fastest by far, in comparison to other QSRs who merged traditional and online order pickups through the same drive-thru lanes.

> *"I tried the Chipotlane for the first time and it was awesome. Since everyone in line had ordered and paid online already, pickup was really fast and easy. Why don't more places offer this?"*

McDonalds also delivered relatively fast wait times and top CSAT scores, while leveraging their existing drive-thru infrastructure. Unfortunately, Chick-Fil-A and Dunkin' had people waiting a long time for what customers expected would be a fast in-and-out experience.

> *"I don't understand... I ordered and paid through the Chick-Fil-A app, then picked up the order through drive-thru (not even requiring them to run it out to me) but I still had to wait in the drive-thru line a very long time for my order and saved zero time."*

The opportunity is huge for online ordering for designated drive-thru pickup lanes. By offering online pickup through designated drive-thru lanes, brands can capture revenue that may have been lost due to the perception that the wait time will take too long in the typical drive-thru lane.

Why This All Matters

Before the pandemic hit, some industries were already asking themselves existential questions.

Restaurants upended by aggregators and then by the pandemic are realizing new models are going to be required in order to survive.

Retailers have been forced to rethink their models in order to compete and drive greater demand and loyalty among future generations.

Grocery brands are investing real-time more than ever into customer data and revolutionizing shopping experiences, and new channels to help them maintain market share and grow longer term.

None of the answers to these questions are easy. We know one solution that addresses most of these questions lies in the investment of Order for Pickup.

RESTAURANTS:
"Do I really need this large of a footprint? How do I compete and increase demand or throughput? Should I lean more into off-premise, ghost kitchens?

GROCERS:
"How do I learn more about my customers and create a smarter digital experience? How do I compete with Amazon and delivery services?"

RETAILERS:
"What is the future of brick and mortar? How do I revolutionize the experience for the digital generation? How do I compete online?"

"The best experiences came from the brands that knew I was coming before I got there. It was faster and easier and made me feel like a VIP and it's like the future of all shopping experiences. I cannot wait until it is the universal experience."

– Secret Shopper

Best Practices

The hundreds of trips made by our secret shoppers clearly demonstrates that the attribute with the strongest correlation to CSAT was the speed of the pickup experience. However, as the report revealed, it isn't just wait time, other attributes are also important:

1. **Wait Time**
2. **Easy Process**
3. **Customer Service**
4. **Quality/Accuracy of Order**

When brands fall short in one area, it is possible to make up for it in other areas. For instance, Chick-Fil-A and Target did not deliver fast experiences, but interviews reveal that they have such strong brand loyalty that it would likely take many more awful experiences to impact overall CSAT.

> *"There are multiple attributes that determine customer satisfaction and loyalty; it is a nuanced challenge that every brand must balance. Orders for Pickup will become a prominent channel for brands who lean in to their strongest attributes (quality of product, for instance) but continue to work to improve the others (process, wait time, customer service...)."*
>
> *- Dr. Kirthi Kalyanam*

Keeping that in mind, the following are best practices that will add value to brands over the long-term...

1

Prioritize Order for Pickup Resources

Ensure that pickup instructions are clear, on-site signage is easy to follow with dedicated pickup parking spots or check-in areas. Brands must also reinforce employee training so experiences are consistent across locations, build customer loyalty and drive more of your business through Online Order for Pickup.

Rakuten Ready

2

Integrate Location Technology into Your Experience

Enable faster, safer, and more seamless experiences your customers will want to repeat, while also avoiding some of the biggest pain points experienced by our secret shoppers repeatedly. Location technology enables orders to be timed perfectly around the customer's arrival. And in times like this, technology also enables preparation for a safe contactless hand-off.

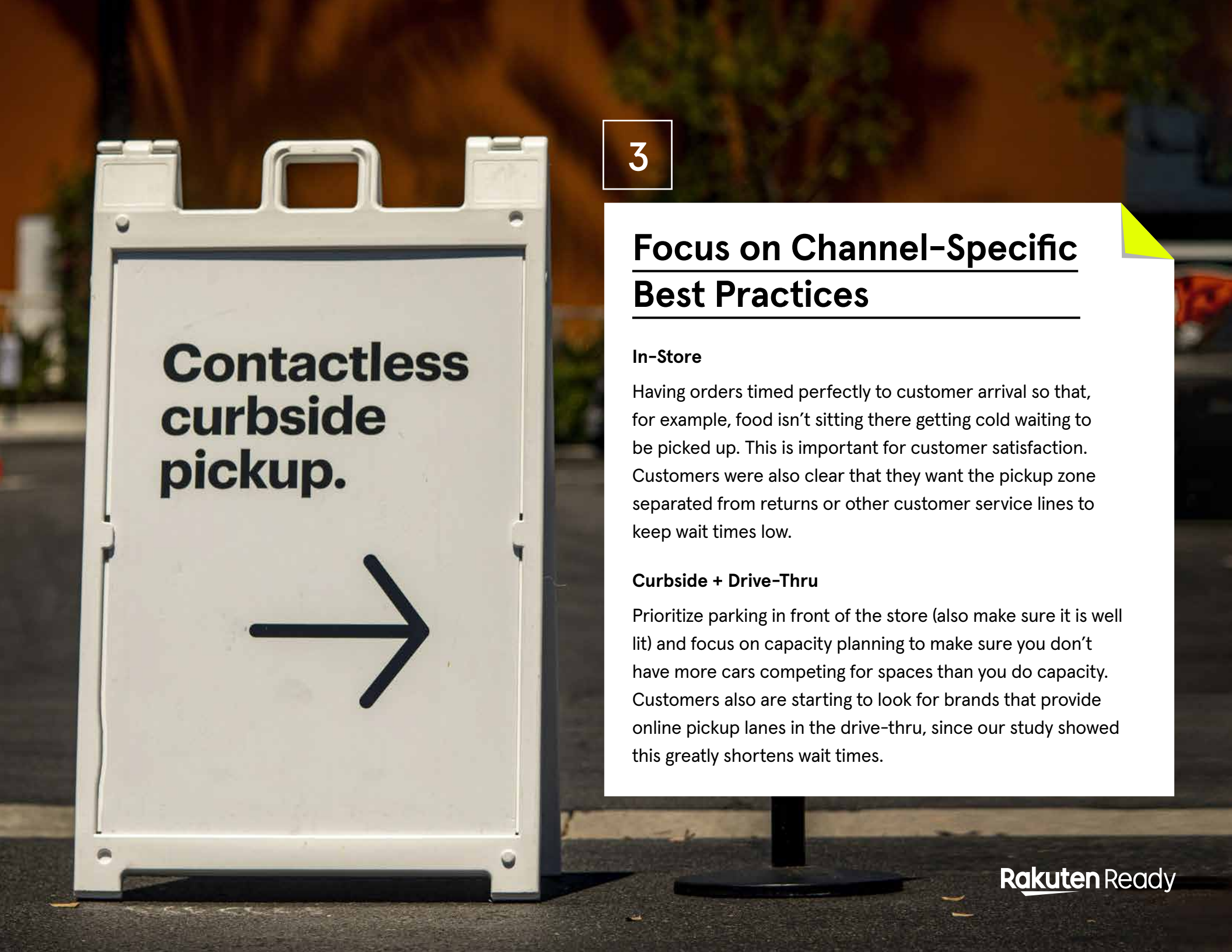

3

Focus on Channel-Specific Best Practices

In-Store

Having orders timed perfectly to customer arrival so that, for example, food isn't sitting there getting cold waiting to be picked up. This is important for customer satisfaction. Customers were also clear that they want the pickup zone separated from returns or other customer service lines to keep wait times low.

Curbside + Drive-Thru

Prioritize parking in front of the store (also make sure it is well lit) and focus on capacity planning to make sure you don't have more cars competing for spaces than you do capacity. Customers also are starting to look for brands that provide online pickup lanes in the drive-thru, since our study showed this greatly shortens wait times.

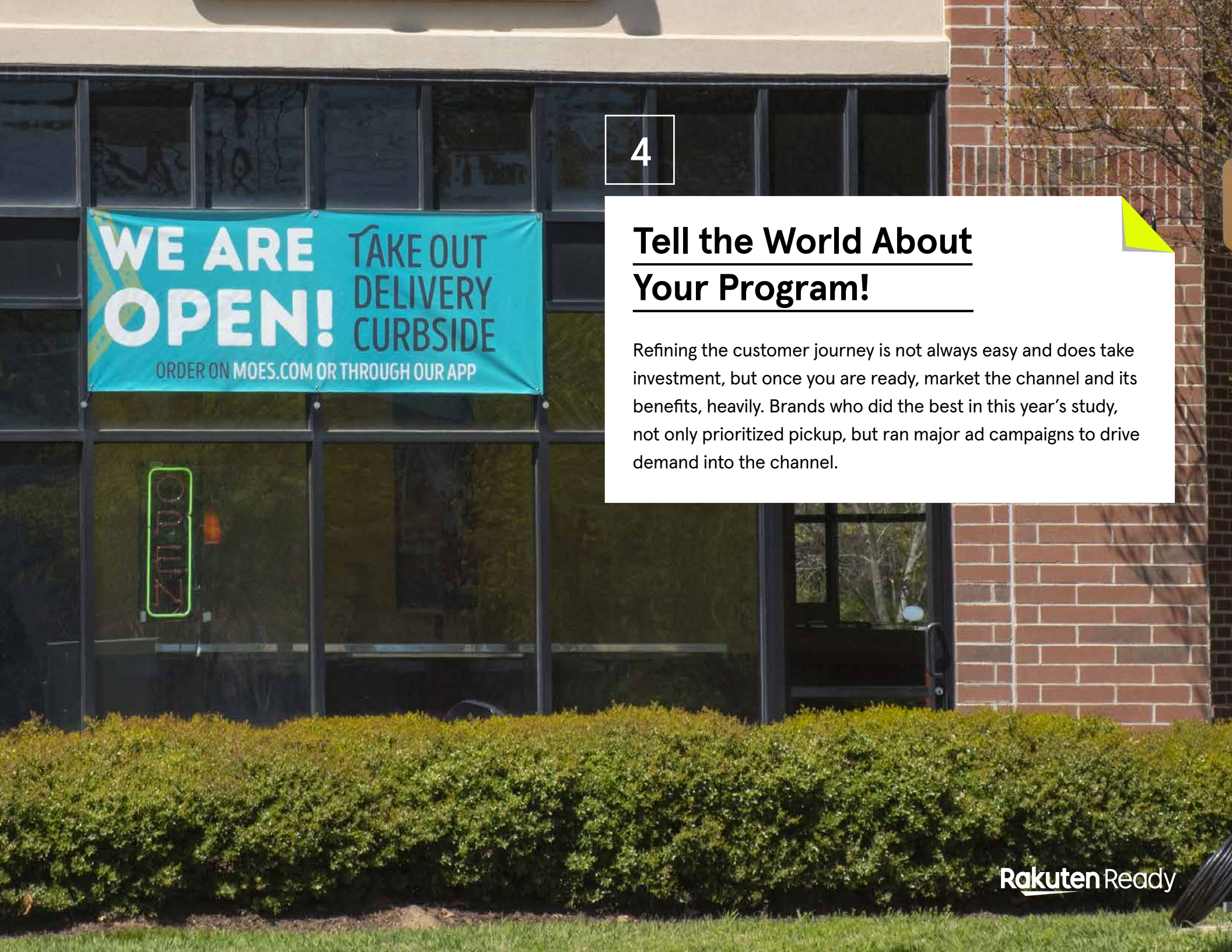

4

Tell the World About Your Program!

Refining the customer journey is not always easy and does take investment, but once you are ready, market the channel and its benefits, heavily. Brands who did the best in this year's study, not only prioritized pickup, but ran major ad campaigns to drive demand into the channel.

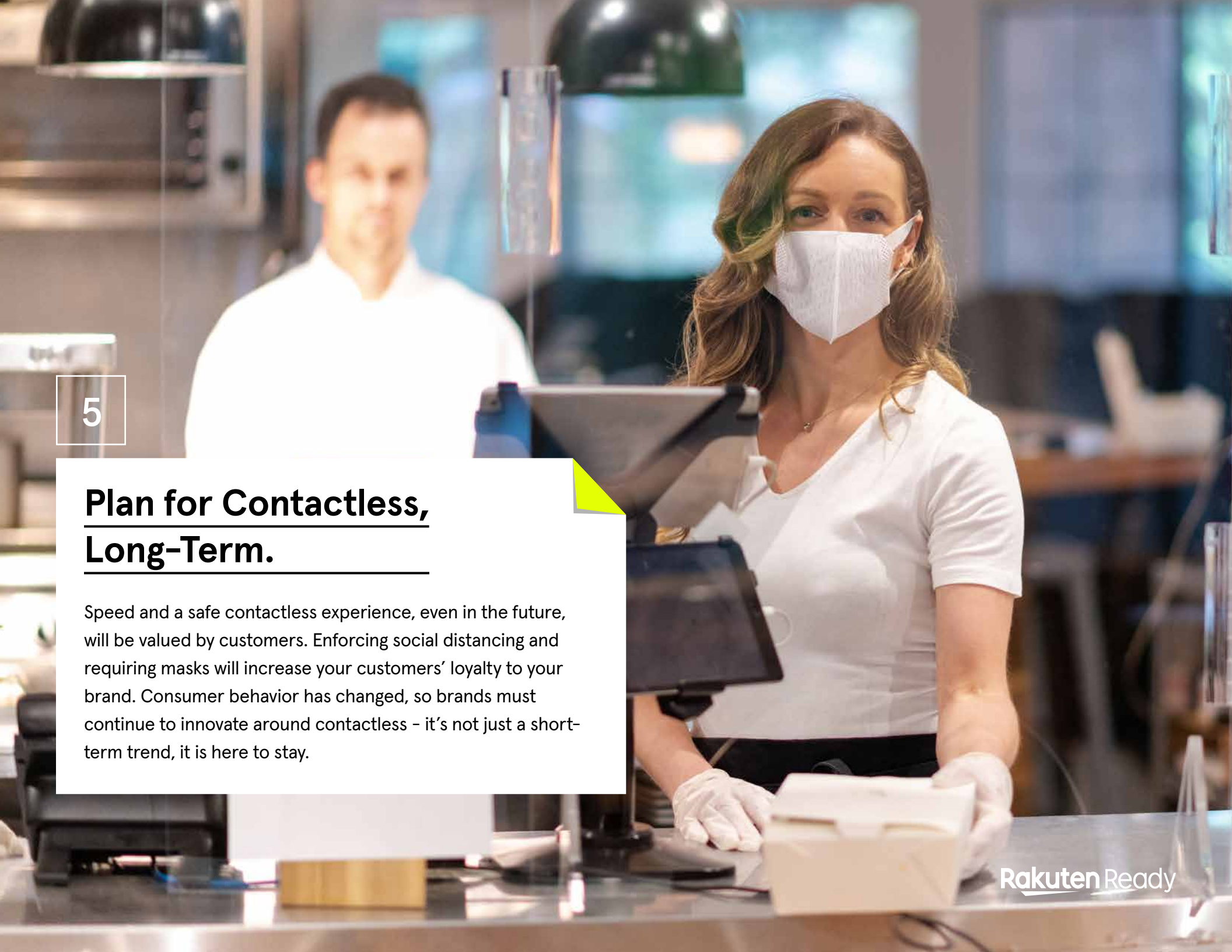

5

Plan for Contactless, Long-Term.

Speed and a safe contactless experience, even in the future, will be valued by customers. Enforcing social distancing and requiring masks will increase your customers' loyalty to your brand. Consumer behavior has changed, so brands must continue to innovate around contactless - it's not just a short-term trend, it is here to stay.

Key Takeaways

WAIT TIME + SAFETY + SUPERIOR CUSTOMER EXPERIENCES + REPEAT EXPERIENCE → LONG-TERM BRAND LOYALTY

BEST IN CLASS

CHIPOTLE

Chipotle delivered the fastest wait times and highest CSATs in 2 of 3 categories (they don't offer curbside) - standing out as a top brand 2 years in a row.

MOST IMPROVED

THE HOME DEPOT

Home Depot was challenged in 2019, but in 2020, improved their wait time the most, while receiving some of the best qualitative feedback.

THE 'CHARMERS'

Chick-fil-A TARGET

Each brand fell short of wait time expectations, but still received strong CSAT scores by leaning into other core strengths.

PARTICIPATION TROPHY

LOWE'S

Unfortunately, for 2 years in a row, Lowe's has kept customers waiting and were the recipient of some of the most aggressive feedback.

Rakuten Ready ARRIVE, a Solution for Brands of All Sizes

Rakuten Ready, the leader in predictive arrival technology, has been focusing on online Order for Pickup since our beginning in 2013, and has years of proven excellence in delivering superior customer experiences, with brands of all sizes.

We enable brands to deliver seamless, efficient, and safe contactless Order for Pickup experiences with our Rakuten Ready ARRIVE platform:

- → **Improve customer satisfaction**
- → **Optimize operations with real-time store-by-store analytics**
- → **Get started quickly and easily**
- → **Leverage our expertise**

Learn more about ARRIVE HERE and let's TALK about how Rakuten Ready can best help you today.

Rakuten Ready

Methodology

The study collected data points from May - August 2020. This resulted in 500+ site visits from 11 major metropolitan areas, in 6 different states.

Each visit measured a variety of points including:

- Time it took to place the order and enter payment
- Notifications around order processing
- Wait times related to order pickup
- Documenting safety and COVID-19 protocols
- Customer Satisfaction and NPS

Process

Participants were asked to place an order using the brand's mobile application, if this was not possible the order was placed on the brand's website. They were then instructed to share location with the brand as they headed to pick up their order. Participants were assigned one of three pickup types: curbside pickup, in-store pickup, and drive-thru pickup.

Participants were instructed to detail their time during ordering as well as pickup as well as document their order experience.

Order Information

The participants were instructed to have a very similar basket size as follows:

- QSR: Meal defined as main menu item, side item, and drink
- Restaurant: One meal entree
- Grocer: One item from 4 different zones (freezer, fridge, product, non-perishable)
- Retail: One item of choice

Participants

The participants represented a cross section of the United States with ages ranging from 20-60, spanning different socioeconomic status'. All participants were required to own a mobile device and have access to a car to pick up orders. Their orders were reimbursed in the amount that was allocated for that particular brand. They were instructed to follow local regulations. While none cancelled an order due to COVID-19, it was shared they were not to complete an order if they felt uncomfortable going to that merchant due to COVID-19.

Data Commentary

Training: Participants were trained on how to measure time as well as rate their experience. This was done to ensure consistency across participants.

Completed Trips Only: The data analyzed is from completed trips. An immaterial number of orders were deemed incomplete due to the brands inability to fulfill the orders.

COVID-19 Impact: Participants were asked to adhere to local regulations when completing the order. When their assigned pickup method was not available, they were allowed to switch to the one that was available to them. That data was counted as the method they used rather than what was assigned.

Special thank you to Dr. Kirthi Kalyanam, L.J. Skaggs Distinguished Professor and Executive Director of the Retail Management Institute at Santa Clara University for all his insights, guidance and time.

CAPACITY ANALYSIS WORKSHEETS

Main Street at Trotter Road
Main Street at Pond Street
Main Street at Jessica Lane
Pond Street at the Project Site Driveway
Main Street at the Project Site Driveway

Main Street at Trotter Road

Lane Group	WBL	WBR	NBT	NBR	SBL	SBT
Lane Configurations						
Traffic Volume (vph)	104	87	1056	202	142	608
Future Volume (vph)	104	87	1056	202	142	608
Lane Util. Factor	1.00	1.00	0.95	0.95	1.00	0.95
Frt		0.850	0.976			
Flt Protected	0.950				0.950	
Satd. Flow (prot)	1668	1478	3488	0	1668	3505
Flt Permitted	0.950				0.121	
Satd. Flow (perm)	1668	1478	3488	0	212	3505
Satd. Flow (RTOR)		100	25			
Adj. Flow (vph)	120	100	1187	227	180	770
Lane Group Flow (vph)	120	100	1414	0	180	770
Turn Type	Prot	Perm	NA		pm+pt	NA
Protected Phases	8		2		1	6
Permitted Phases		8			6	
Detector Phase	8	8	2		1	6
Switch Phase						
Minimum Initial (s)	8.0	8.0	10.0		6.0	10.0
Minimum Split (s)	24.0	24.0	27.0		11.0	16.0
Total Split (s)	35.0	35.0	60.0		25.0	85.0
Total Split (%)	29.2%	29.2%	50.0%		20.8%	70.8%
Maximum Green (s)	29.0	29.0	54.0		20.0	79.0
Yellow Time (s)	4.0	4.0	4.0		3.0	4.0
All-Red Time (s)	2.0	2.0	2.0		2.0	2.0
Lost Time Adjust (s)	-2.0	-2.0	-2.0		-1.0	-2.0
Total Lost Time (s)	4.0	4.0	4.0		4.0	4.0
Lead/Lag			Lag		Lead	
Lead-Lag Optimize?			Yes		Yes	
Vehicle Extension (s)	3.0	3.0	3.0		3.0	3.0
Recall Mode	None	None	C-Max		None	C-Max
Walk Time (s)	7.0	7.0	7.0			
Flash Dont Walk (s)	10.0	10.0	14.0			
Pedestrian Calls (#/hr)	0	0	0			
v/c Ratio	0.54	0.35	0.62		0.54	0.27
Control Delay	57.0	12.0	14.8		12.5	3.6
Queue Delay	0.0	0.0	36.3		0.0	0.0
Total Delay	57.0	12.0	51.1		12.5	3.6
Queue Length 50th (ft)	88	0	301		25	64
Queue Length 95th (ft)	139	44	484		60	89
Internal Link Dist (ft)	300		212			303
Turn Bay Length (ft)					100	
Base Capacity (vph)	430	455	2287		424	2804
Starvation Cap Reductn	0	0	965		0	0
Spillback Cap Reductn	0	0	0		0	0
Storage Cap Reductn	0	0	0		0	0
Reduced v/c Ratio	0.28	0.22	1.07		0.42	0.27

Intersection Summary
Cycle Length: 120

Actuated Cycle Length: 120
Offset: 0 (0%), Referenced to phase 2:NBT and 6:SBTL, Start of Green
Natural Cycle: 65
Control Type: Actuated-Coordinated

Splits and Phases: 1: Main Street & Trotter Road

Movement	WBL	WBR	NBT	NBR	SBL	SBT
Lane Configurations						
Traffic Volume (vph)	104	87	1056	202	142	608
Future Volume (vph)	104	87	1056	202	142	608
Ideal Flow (vphpl)	1900	1900	1900	1900	1900	1900
Lane Width	10	10	12	12	10	12
Total Lost time (s)	4.0	4.0	4.0		4.0	4.0
Lane Util. Factor	1.00	1.00	0.95		1.00	0.95
Frt	1.00	0.85	0.98		1.00	1.00
Flt Protected	0.95	1.00	1.00		0.95	1.00
Satd. Flow (prot)	1668	1478	3488		1668	3505
Flt Permitted	0.95	1.00	1.00		0.12	1.00
Satd. Flow (perm)	1668	1478	3488		213	3505
Peak-hour factor, PHF	0.87	0.87	0.89	0.89	0.79	0.79
Adj. Flow (vph)	120	100	1187	227	180	770
RTOR Reduction (vph)	0	87	9	0	0	0
Lane Group Flow (vph)	120	13	1405	0	180	770
Heavy Vehicles (%)	1%	2%	1%	1%	1%	3%
Turn Type	Prot	Perm	NA		pm+pt	NA
Protected Phases	8		2		1	6
Permitted Phases		8			6	
Actuated Green, G (s)	14.0	14.0	76.4		94.0	94.0
Effective Green, g (s)	16.0	16.0	78.4		95.0	96.0
Actuated g/C Ratio	0.13	0.13	0.65		0.79	0.80
Clearance Time (s)	6.0	6.0	6.0		5.0	6.0
Vehicle Extension (s)	3.0	3.0	3.0		3.0	3.0
Lane Grp Cap (vph)	222	197	2278		333	2804
v/s Ratio Prot	c0.07		c0.40		c0.06	0.22
v/s Ratio Perm		0.01			0.37	
v/c Ratio	0.54	0.07	0.62		0.54	0.27
Uniform Delay, d1	48.6	45.5	12.1		10.7	3.1
Progression Factor	1.00	1.00	1.00		1.00	1.00
Incremental Delay, d2	2.7	0.1	1.3		1.8	0.2
Delay (s)	51.2	45.6	13.3		12.5	3.3
Level of Service	D	D	B		B	A
Approach Delay (s)	48.7		13.3			5.1
Approach LOS	D		B			A

Intersection Summary			
HCM 2000 Control Delay	13.3	HCM 2000 Level of Service	B
HCM 2000 Volume to Capacity ratio	0.60		
Actuated Cycle Length (s)	120.0	Sum of lost time (s)	12.0
Intersection Capacity Utilization	60.2%	ICU Level of Service	B
Analysis Period (min)	15		

c Critical Lane Group

Lane Group	WBL	WBR	NBT	NBR	SBL	SBT
Lane Configurations						
Traffic Volume (vph)	230	141	795	95	91	1027
Future Volume (vph)	230	141	795	95	91	1027
Lane Util. Factor	1.00	1.00	0.95	0.95	1.00	0.95
Frt		0.850	0.984			
Flt Protected	0.950				0.950	
Satd. Flow (prot)	1668	1507	3552	0	1685	3574
Flt Permitted	0.950				0.223	
Satd. Flow (perm)	1668	1507	3552	0	395	3574
Satd. Flow (RTOR)		193	14			
Adj. Flow (vph)	315	193	855	102	97	1093
Lane Group Flow (vph)	315	193	957	0	97	1093
Turn Type	Prot	Perm	NA		pm+pt	NA
Protected Phases	8		2		1	6
Permitted Phases		8			6	
Detector Phase	8	8	2		1	6
Switch Phase						
Minimum Initial (s)	8.0	8.0	10.0		6.0	10.0
Minimum Split (s)	24.0	24.0	27.0		11.0	16.0
Total Split (s)	35.0	35.0	60.0		25.0	85.0
Total Split (%)	29.2%	29.2%	50.0%		20.8%	70.8%
Maximum Green (s)	29.0	29.0	54.0		20.0	79.0
Yellow Time (s)	4.0	4.0	4.0		3.0	4.0
All-Red Time (s)	2.0	2.0	2.0		2.0	2.0
Lost Time Adjust (s)	-2.0	-2.0	-2.0		-1.0	-2.0
Total Lost Time (s)	4.0	4.0	4.0		4.0	4.0
Lead/Lag			Lag		Lead	
Lead-Lag Optimize?			Yes		Yes	
Vehicle Extension (s)	3.0	3.0	3.0		3.0	3.0
Recall Mode	None	None	C-Max		None	C-Max
Walk Time (s)	7.0	7.0	7.0			
Flash Dont Walk (s)	10.0	10.0	14.0			
Pedestrian Calls (#/hr)	0	0	0			
v/c Ratio	0.82	0.39	0.45		0.26	0.44
Control Delay	60.6	7.3	14.8		8.1	8.7
Queue Delay	0.0	0.0	6.3		0.0	0.0
Total Delay	60.6	7.3	21.1		8.1	8.7
Queue Length 50th (ft)	227	0	210		23	183
Queue Length 95th (ft)	252	23	278		43	232
Internal Link Dist (ft)	300		212			303
Turn Bay Length (ft)					100	
Base Capacity (vph)	430	532	2117		502	2506
Starvation Cap Reductn	0	0	1097		0	0
Spillback Cap Reductn	0	0	0		0	0
Storage Cap Reductn	0	0	0		0	0
Reduced v/c Ratio	0.73	0.36	0.94		0.19	0.44

Intersection Summary
Cycle Length: 120

Actuated Cycle Length: 120
Offset: 0 (0%), Referenced to phase 2:NBT and 6:SBTL, Start of Green
Natural Cycle: 65
Control Type: Actuated-Coordinated

Splits and Phases: 1: Main Street & Trotter Road

Movement	WBL	WBR	NBT	NBR	SBL	SBT
Lane Configurations						
Traffic Volume (vph)	230	141	795	95	91	1027
Future Volume (vph)	230	141	795	95	91	1027
Ideal Flow (vphpl)	1900	1900	1900	1900	1900	1900
Lane Width	10	10	12	12	10	12
Total Lost time (s)	4.0	4.0	4.0		4.0	4.0
Lane Util. Factor	1.00	1.00	0.95		1.00	0.95
Frt	1.00	0.85	0.98		1.00	1.00
Flt Protected	0.95	1.00	1.00		0.95	1.00
Satd. Flow (prot)	1668	1507	3552		1685	3574
Flt Permitted	0.95	1.00	1.00		0.22	1.00
Satd. Flow (perm)	1668	1507	3552		396	3574
Peak-hour factor, PHF	0.73	0.73	0.93	0.93	0.94	0.94
Adj. Flow (vph)	315	193	855	102	97	1093
RTOR Reduction (vph)	0	148	6	0	0	0
Lane Group Flow (vph)	315	45	951	0	97	1093
Heavy Vehicles (%)	1%	0%	0%	0%	0%	1%
Turn Type	Prot	Perm	NA		pm+pt	NA
Protected Phases	8		2		1	6
Permitted Phases		8			6	
Actuated Green, G (s)	25.8	25.8	69.4		82.2	82.2
Effective Green, g (s)	27.8	27.8	71.4		83.2	84.2
Actuated g/C Ratio	0.23	0.23	0.60		0.69	0.70
Clearance Time (s)	6.0	6.0	6.0		5.0	6.0
Vehicle Extension (s)	3.0	3.0	3.0		3.0	3.0
Lane Grp Cap (vph)	386	349	2113		369	2507
v/s Ratio Prot	c0.19		0.27		0.02	c0.31
v/s Ratio Perm		0.03			0.16	
v/c Ratio	0.82	0.13	0.45		0.26	0.44
Uniform Delay, d1	43.7	36.5	13.4		7.8	7.7
Progression Factor	1.00	1.00	1.00		1.00	1.00
Incremental Delay, d2	12.5	0.2	0.7		0.4	0.6
Delay (s)	56.2	36.7	14.1		8.2	8.2
Level of Service	E	D	B		A	A
Approach Delay (s)	48.8		14.1			8.2
Approach LOS	D		B			A

Intersection Summary			
HCM 2000 Control Delay	18.1	HCM 2000 Level of Service	B
HCM 2000 Volume to Capacity ratio	0.55		
Actuated Cycle Length (s)	120.0	Sum of lost time (s)	12.0
Intersection Capacity Utilization	52.8%	ICU Level of Service	A
Analysis Period (min)	15		

c Critical Lane Group

Lane Group	WBL	WBR	NBT	NBR	SBL	SBT
Lane Configurations						
Traffic Volume (vph)	145	96	903	77	80	918
Future Volume (vph)	145	96	903	77	80	918
Lane Util. Factor	1.00	1.00	0.95	0.95	1.00	0.95
Frt		0.850	0.988			
Flt Protected	0.950				0.950	
Satd. Flow (prot)	1668	1507	3534	0	1685	3574
Flt Permitted	0.950				0.215	
Satd. Flow (perm)	1668	1507	3534	0	381	3574
Satd. Flow (RTOR)		99	11			
Adj. Flow (vph)	149	99	941	80	85	977
Lane Group Flow (vph)	149	99	1021	0	85	977
Turn Type	Prot	Perm	NA		pm+pt	NA
Protected Phases	8		2		1	6
Permitted Phases		8			6	
Detector Phase	8	8	2		1	6
Switch Phase						
Minimum Initial (s)	8.0	8.0	10.0		6.0	10.0
Minimum Split (s)	24.0	24.0	27.0		11.0	16.0
Total Split (s)	30.0	30.0	40.0		25.0	65.0
Total Split (%)	31.6%	31.6%	42.1%		26.3%	68.4%
Maximum Green (s)	24.0	24.0	34.0		20.0	59.0
Yellow Time (s)	4.0	4.0	4.0		3.0	4.0
All-Red Time (s)	2.0	2.0	2.0		2.0	2.0
Lost Time Adjust (s)	-2.0	-2.0	-2.0		-1.0	-2.0
Total Lost Time (s)	4.0	4.0	4.0		4.0	4.0
Lead/Lag			Lag		Lead	
Lead-Lag Optimize?			Yes		Yes	
Vehicle Extension (s)	3.0	3.0	3.0		3.0	3.0
Recall Mode	None	None	C-Max		None	C-Max
Walk Time (s)	7.0	7.0	7.0			
Flash Dont Walk (s)	10.0	10.0	14.0			
Pedestrian Calls (#/hr)	0	0	0			
v/c Ratio	0.54	0.30	0.45		0.22	0.36
Control Delay	42.8	9.2	10.3		5.1	4.9
Queue Delay	0.0	0.0	1.8		0.0	0.0
Total Delay	42.8	9.2	12.1		5.1	4.9
Queue Length 50th (ft)	83	0	153		11	87
Queue Length 95th (ft)	136	40	244		28	146
Internal Link Dist (ft)	300		212			303
Turn Bay Length (ft)					100	
Base Capacity (vph)	456	484	2290		573	2679
Starvation Cap Reductn	0	0	1048		0	0
Spillback Cap Reductn	0	0	0		0	0
Storage Cap Reductn	0	0	0		0	0
Reduced v/c Ratio	0.33	0.20	0.82		0.15	0.36

Intersection Summary
Cycle Length: 95

Actuated Cycle Length: 95
Offset: 0 (0%), Referenced to phase 2:NBT and 6:SBTL, Start of Green
Natural Cycle: 65
Control Type: Actuated-Coordinated

Splits and Phases: 1: Main Street & Trotter Road

Movement	WBL	WBR	NBT	NBR	SBL	SBT
Lane Configurations						
Traffic Volume (vph)	145	96	903	77	80	918
Future Volume (vph)	145	96	903	77	80	918
Ideal Flow (vphpl)	1900	1900	1900	1900	1900	1900
Lane Width	10	10	12	12	10	12
Total Lost time (s)	4.0	4.0	4.0		4.0	4.0
Lane Util. Factor	1.00	1.00	0.95		1.00	0.95
Frt	1.00	0.85	0.99		1.00	1.00
Flt Protected	0.95	1.00	1.00		0.95	1.00
Satd. Flow (prot)	1668	1507	3535		1685	3574
Flt Permitted	0.95	1.00	1.00		0.22	1.00
Satd. Flow (perm)	1668	1507	3535		382	3574
Peak-hour factor, PHF	0.97	0.97	0.96	0.96	0.94	0.94
Adj. Flow (vph)	149	99	941	80	85	977
RTOR Reduction (vph)	0	83	4	0	0	0
Lane Group Flow (vph)	149	16	1017	0	85	977
Heavy Vehicles (%)	1%	0%	1%	0%	0%	1%
Turn Type	Prot	Perm	NA		pm+pt	NA
Protected Phases	8		2		1	6
Permitted Phases		8			6	
Actuated Green, G (s)	13.8	13.8	58.4		69.2	69.2
Effective Green, g (s)	15.8	15.8	60.4		70.2	71.2
Actuated g/C Ratio	0.17	0.17	0.64		0.74	0.75
Clearance Time (s)	6.0	6.0	6.0		5.0	6.0
Vehicle Extension (s)	3.0	3.0	3.0		3.0	3.0
Lane Grp Cap (vph)	277	250	2247		375	2678
v/s Ratio Prot	c0.09		c0.29		0.02	c0.27
v/s Ratio Perm		0.01			0.15	
v/c Ratio	0.54	0.07	0.45		0.23	0.36
Uniform Delay, d1	36.3	33.4	8.8		4.8	4.1
Progression Factor	1.00	1.00	1.00		1.00	1.00
Incremental Delay, d2	2.0	0.1	0.7		0.3	0.4
Delay (s)	38.3	33.5	9.5		5.1	4.5
Level of Service	D	C	A		A	A
Approach Delay (s)	36.4		9.5			4.5
Approach LOS	D		A			A

Intersection Summary			
HCM 2000 Control Delay	10.1	HCM 2000 Level of Service	B
HCM 2000 Volume to Capacity ratio	0.47		
Actuated Cycle Length (s)	95.0	Sum of lost time (s)	12.0
Intersection Capacity Utilization	50.4%	ICU Level of Service	A
Analysis Period (min)	15		

c Critical Lane Group

Lane Group	WBL	WBR	NBT	NBR	SBL	SBT
Lane Configurations						
Traffic Volume (vph)	288	258	1184	434	203	748
Future Volume (vph)	288	258	1184	434	203	748
Lane Util. Factor	1.00	1.00	0.95	0.95	1.00	0.95
Frt		0.850	0.960			
Flt Protected	0.950				0.950	
Satd. Flow (prot)	1668	1478	3431	0	1668	3505
Flt Permitted	0.950				0.062	
Satd. Flow (perm)	1668	1478	3431	0	109	3505
Satd. Flow (RTOR)		297	59			
Adj. Flow (vph)	331	297	1330	488	257	947
Lane Group Flow (vph)	331	297	1818	0	257	947
Turn Type	Prot	Perm	NA		pm+pt	NA
Protected Phases	8		2		1	6
Permitted Phases		8			6	
Detector Phase	8	8	2		1	6
Switch Phase						
Minimum Initial (s)	8.0	8.0	10.0		6.0	10.0
Minimum Split (s)	24.0	24.0	27.0		11.0	16.0
Total Split (s)	35.0	35.0	60.0		25.0	85.0
Total Split (%)	29.2%	29.2%	50.0%		20.8%	70.8%
Maximum Green (s)	29.0	29.0	54.0		20.0	79.0
Yellow Time (s)	4.0	4.0	4.0		3.0	4.0
All-Red Time (s)	2.0	2.0	2.0		2.0	2.0
Lost Time Adjust (s)	-2.0	-2.0	-2.0		-1.0	-2.0
Total Lost Time (s)	4.0	4.0	4.0		4.0	4.0
Lead/Lag			Lag		Lead	
Lead-Lag Optimize?			Yes		Yes	
Vehicle Extension (s)	3.0	3.0	3.0		3.0	3.0
Recall Mode	None	None	C-Max		None	C-Max
Walk Time (s)	7.0	7.0	7.0			
Flash Dont Walk (s)	10.0	10.0	14.0			
Pedestrian Calls (#/hr)	0	0	0			
v/c Ratio	0.83	0.51	1.02		0.83	0.39
Control Delay	61.7	7.4	55.6		53.8	8.5
Queue Delay	0.0	0.0	32.4		0.0	0.0
Total Delay	61.7	7.4	88.0		53.8	8.5
Queue Length 50th (ft)	238	0	~828		143	156
Queue Length 95th (ft)	#335	59	#961		197	161
Internal Link Dist (ft)	300		212			303
Turn Bay Length (ft)					100	
Base Capacity (vph)	430	602	1784		348	2435
Starvation Cap Reductn	0	0	501		0	0
Spillback Cap Reductn	0	0	0		0	0
Storage Cap Reductn	0	0	0		0	0
Reduced v/c Ratio	0.77	0.49	1.42		0.74	0.39

Intersection Summary
Cycle Length: 120

Actuated Cycle Length: 120
Offset: 0 (0%), Referenced to phase 2:NBT and 6:SBTL, Start of Green
Natural Cycle: 90
Control Type: Actuated-Coordinated
~ Volume exceeds capacity, queue is theoretically infinite.
Queue shown is maximum after two cycles.
95th percentile volume exceeds capacity, queue may be longer.
Queue shown is maximum after two cycles.

Splits and Phases: 1: Main Street & Trotter Road

Movement	WBL	WBR	NBT	NBR	SBL	SBT
Lane Configurations						
Traffic Volume (vph)	288	258	1184	434	203	748
Future Volume (vph)	288	258	1184	434	203	748
Ideal Flow (vphpl)	1900	1900	1900	1900	1900	1900
Lane Width	10	10	12	12	10	12
Total Lost time (s)	4.0	4.0	4.0		4.0	4.0
Lane Util. Factor	1.00	1.00	0.95		1.00	0.95
Frt	1.00	0.85	0.96		1.00	1.00
Flt Protected	0.95	1.00	1.00		0.95	1.00
Satd. Flow (prot)	1668	1478	3430		1668	3505
Flt Permitted	0.95	1.00	1.00		0.06	1.00
Satd. Flow (perm)	1668	1478	3430		109	3505
Peak-hour factor, PHF	0.87	0.87	0.89	0.89	0.79	0.79
Adj. Flow (vph)	331	297	1330	488	257	947
RTOR Reduction (vph)	0	226	29	0	0	0
Lane Group Flow (vph)	331	71	1789	0	257	947
Heavy Vehicles (%)	1%	2%	1%	1%	1%	3%
Turn Type	Prot	Perm	NA		pm+pt	NA
Protected Phases	8		2		1	6
Permitted Phases		8			6	
Actuated Green, G (s)	26.6	26.6	59.4		81.4	81.4
Effective Green, g (s)	28.6	28.6	61.4		82.4	83.4
Actuated g/C Ratio	0.24	0.24	0.51		0.69	0.70
Clearance Time (s)	6.0	6.0	6.0		5.0	6.0
Vehicle Extension (s)	3.0	3.0	3.0		3.0	3.0
Lane Grp Cap (vph)	397	352	1755		308	2435
v/s Ratio Prot	c0.20		c0.52		c0.12	0.27
v/s Ratio Perm		0.05			0.45	
v/c Ratio	0.83	0.20	1.02		0.83	0.39
Uniform Delay, d1	43.4	36.6	29.3		38.6	7.6
Progression Factor	1.00	1.00	1.00		1.00	1.00
Incremental Delay, d2	14.0	0.3	26.5		17.4	0.5
Delay (s)	57.4	36.8	55.8		55.9	8.1
Level of Service	E	D	E		E	A
Approach Delay (s)	47.7		55.8			18.3
Approach LOS	D		E			B

Intersection Summary			
HCM 2000 Control Delay	42.0	HCM 2000 Level of Service	D
HCM 2000 Volume to Capacity ratio	0.94		
Actuated Cycle Length (s)	120.0	Sum of lost time (s)	12.0
Intersection Capacity Utilization	83.8%	ICU Level of Service	E
Analysis Period (min)	15		

c Critical Lane Group

Lane Group	WBL	WBR	NBT	NBR	SBL	SBT
Lane Configurations						
Traffic Volume (vph)	409	307	883	294	186	1303
Future Volume (vph)	409	307	883	294	186	1303
Lane Util. Factor	1.00	1.00	0.95	0.95	1.00	0.95
Frt		0.850	0.963			
Flt Protected	0.950				0.950	
Satd. Flow (prot)	1668	1507	3476	0	1685	3574
Flt Permitted	0.950				0.106	
Satd. Flow (perm)	1668	1507	3476	0	188	3574
Satd. Flow (RTOR)		335	51			
Adj. Flow (vph)	560	421	949	316	198	1386
Lane Group Flow (vph)	560	421	1265	0	198	1386
Turn Type	Prot	Perm	NA		pm+pt	NA
Protected Phases	8		2		1	6
Permitted Phases		8			6	
Detector Phase	8	8	2		1	6
Switch Phase						
Minimum Initial (s)	8.0	8.0	10.0		6.0	10.0
Minimum Split (s)	24.0	24.0	27.0		11.0	16.0
Total Split (s)	35.0	35.0	60.0		25.0	85.0
Total Split (%)	29.2%	29.2%	50.0%		20.8%	70.8%
Maximum Green (s)	29.0	29.0	54.0		20.0	79.0
Yellow Time (s)	4.0	4.0	4.0		3.0	4.0
All-Red Time (s)	2.0	2.0	2.0		2.0	2.0
Lost Time Adjust (s)	-2.0	-2.0	-2.0		-1.0	-2.0
Total Lost Time (s)	4.0	4.0	4.0		4.0	4.0
Lead/Lag			Lag		Lead	
Lead-Lag Optimize?			Yes		Yes	
Vehicle Extension (s)	3.0	3.0	3.0		3.0	3.0
Recall Mode	None	None	C-Max		None	C-Max
Walk Time (s)	7.0	7.0	7.0			
Flash Dont Walk (s)	10.0	10.0	14.0			
Pedestrian Calls (#/hr)	0	0	0			
v/c Ratio	1.30	0.66	0.69		0.64	0.57
Control Delay	189.1	14.3	23.8		24.2	11.5
Queue Delay	0.0	0.0	49.4		0.0	0.0
Total Delay	189.1	14.3	73.2		24.2	11.5
Queue Length 50th (ft)	~555	53	356		57	273
Queue Length 95th (ft)	#562	68	493		134	330
Internal Link Dist (ft)	300		212			303
Turn Bay Length (ft)					100	
Base Capacity (vph)	430	637	1833		388	2412
Starvation Cap Reductn	0	0	780		0	0
Spillback Cap Reductn	0	0	0		0	0
Storage Cap Reductn	0	0	0		0	0
Reduced v/c Ratio	1.30	0.66	1.20		0.51	0.57

Intersection Summary
Cycle Length: 120

Actuated Cycle Length: 120
Offset: 0 (0%), Referenced to phase 2:NBT and 6:SBTL, Start of Green
Natural Cycle: 70
Control Type: Actuated-Coordinated
~ Volume exceeds capacity, queue is theoretically infinite.
Queue shown is maximum after two cycles.
95th percentile volume exceeds capacity, queue may be longer.
Queue shown is maximum after two cycles.

Splits and Phases: 1: Main Street & Trotter Road

Movement	WBL	WBR	NBT	NBR	SBL	SBT
Lane Configurations						
Traffic Volume (vph)	409	307	883	294	186	1303
Future Volume (vph)	409	307	883	294	186	1303
Ideal Flow (vphpl)	1900	1900	1900	1900	1900	1900
Lane Width	10	10	12	12	10	12
Total Lost time (s)	4.0	4.0	4.0		4.0	4.0
Lane Util. Factor	1.00	1.00	0.95		1.00	0.95
Frt	1.00	0.85	0.96		1.00	1.00
Flt Protected	0.95	1.00	1.00		0.95	1.00
Satd. Flow (prot)	1668	1507	3475		1685	3574
Flt Permitted	0.95	1.00	1.00		0.11	1.00
Satd. Flow (perm)	1668	1507	3475		188	3574
Peak-hour factor, PHF	0.73	0.73	0.93	0.93	0.94	0.94
Adj. Flow (vph)	560	421	949	316	198	1386
RTOR Reduction (vph)	0	248	24	0	0	0
Lane Group Flow (vph)	560	173	1241	0	198	1386
Heavy Vehicles (%)	1%	0%	0%	0%	0%	1%
Turn Type	Prot	Perm	NA		pm+pt	NA
Protected Phases	8		2		1	6
Permitted Phases		8			6	
Actuated Green, G (s)	29.0	29.0	60.4		79.0	79.0
Effective Green, g (s)	31.0	31.0	62.4		80.0	81.0
Actuated g/C Ratio	0.26	0.26	0.52		0.67	0.68
Clearance Time (s)	6.0	6.0	6.0		5.0	6.0
Vehicle Extension (s)	3.0	3.0	3.0		3.0	3.0
Lane Grp Cap (vph)	430	389	1807		307	2412
v/s Ratio Prot	c0.34		c0.36		c0.08	0.39
v/s Ratio Perm		0.11			0.35	
v/c Ratio	1.30	0.44	0.69		0.64	0.57
Uniform Delay, d1	44.5	37.3	21.5		18.4	10.4
Progression Factor	1.00	1.00	1.00		1.00	1.00
Incremental Delay, d2	152.2	0.8	2.1		4.6	1.0
Delay (s)	196.7	38.1	23.6		23.0	11.4
Level of Service	F	D	C		C	B
Approach Delay (s)	128.6		23.6			12.8
Approach LOS	F		C			B

Intersection Summary			
HCM 2000 Control Delay	46.1	HCM 2000 Level of Service	D
HCM 2000 Volume to Capacity ratio	0.86		
Actuated Cycle Length (s)	120.0	Sum of lost time (s)	12.0
Intersection Capacity Utilization	76.8%	ICU Level of Service	D
Analysis Period (min)	15		

c Critical Lane Group

Lane Group	WBL	WBR	NBT	NBR	SBL	SBT
Lane Configurations						
Traffic Volume (vph)	320	269	1001	274	170	1188
Future Volume (vph)	320	269	1001	274	170	1188
Lane Util. Factor	1.00	1.00	0.95	0.95	1.00	0.95
Frt		0.850	0.968			
Flt Protected	0.950				0.950	
Satd. Flow (prot)	1668	1507	3467	0	1685	3574
Flt Permitted	0.950				0.084	
Satd. Flow (perm)	1668	1507	3467	0	149	3574
Satd. Flow (RTOR)		277	42			
Adj. Flow (vph)	330	277	1043	285	181	1264
Lane Group Flow (vph)	330	277	1328	0	181	1264
Turn Type	Prot	Perm	NA		pm+pt	NA
Protected Phases	8		2		1	6
Permitted Phases		8			6	
Detector Phase	8	8	2		1	6
Switch Phase						
Minimum Initial (s)	8.0	8.0	10.0		6.0	10.0
Minimum Split (s)	24.0	24.0	27.0		11.0	16.0
Total Split (s)	30.0	30.0	40.0		25.0	65.0
Total Split (%)	31.6%	31.6%	42.1%		26.3%	68.4%
Maximum Green (s)	24.0	24.0	34.0		20.0	59.0
Yellow Time (s)	4.0	4.0	4.0		3.0	4.0
All-Red Time (s)	2.0	2.0	2.0		2.0	2.0
Lost Time Adjust (s)	-2.0	-2.0	-2.0		-1.0	-2.0
Total Lost Time (s)	4.0	4.0	4.0		4.0	4.0
Lead/Lag			Lag		Lead	
Lead-Lag Optimize?			Yes		Yes	
Vehicle Extension (s)	3.0	3.0	3.0		3.0	3.0
Recall Mode	None	None	C-Max		None	C-Max
Walk Time (s)	7.0	7.0	7.0			
Flash Dont Walk (s)	10.0	10.0	14.0			
Pedestrian Calls (#/hr)	0	0	0			
v/c Ratio	0.79	0.47	0.75		0.64	0.53
Control Delay	47.7	6.4	23.2		25.4	9.6
Queue Delay	0.0	0.0	48.7		0.0	0.0
Total Delay	47.7	6.4	72.0		25.4	9.6
Queue Length 50th (ft)	180	0	321		52	200
Queue Length 95th (ft)	#286	59	#514		117	253
Internal Link Dist (ft)	300		212			303
Turn Bay Length (ft)					100	
Base Capacity (vph)	456	613	1763		438	2379
Starvation Cap Reductn	0	0	602		0	0
Spillback Cap Reductn	0	0	0		0	0
Storage Cap Reductn	0	0	0		0	0
Reduced v/c Ratio	0.72	0.45	1.14		0.41	0.53

Intersection Summary
Cycle Length: 95

Actuated Cycle Length: 95
Offset: 0 (0%), Referenced to phase 2:NBT and 6:SBTL, Start of Green
Natural Cycle: 65
Control Type: Actuated-Coordinated
95th percentile volume exceeds capacity, queue may be longer.
Queue shown is maximum after two cycles.

Splits and Phases: 1: Main Street & Trotter Road

Movement	WBL	WBR	NBT	NBR	SBL	SBT
Lane Configurations						
Traffic Volume (vph)	320	269	1001	274	170	1188
Future Volume (vph)	320	269	1001	274	170	1188
Ideal Flow (vphpl)	1900	1900	1900	1900	1900	1900
Lane Width	10	10	12	12	10	12
Total Lost time (s)	4.0	4.0	4.0		4.0	4.0
Lane Util. Factor	1.00	1.00	0.95		1.00	0.95
Frt	1.00	0.85	0.97		1.00	1.00
Flt Protected	0.95	1.00	1.00		0.95	1.00
Satd. Flow (prot)	1668	1507	3467		1685	3574
Flt Permitted	0.95	1.00	1.00		0.08	1.00
Satd. Flow (perm)	1668	1507	3467		149	3574
Peak-hour factor, PHF	0.97	0.97	0.96	0.96	0.94	0.94
Adj. Flow (vph)	330	277	1043	285	181	1264
RTOR Reduction (vph)	0	208	21	0	0	0
Lane Group Flow (vph)	330	69	1307	0	181	1264
Heavy Vehicles (%)	1%	0%	1%	0%	0%	1%
Turn Type	Prot	Perm	NA		pm+pt	NA
Protected Phases	8		2		1	6
Permitted Phases		8			6	
Actuated Green, G (s)	21.8	21.8	45.7		61.2	61.2
Effective Green, g (s)	23.8	23.8	47.7		62.2	63.2
Actuated g/C Ratio	0.25	0.25	0.50		0.65	0.67
Clearance Time (s)	6.0	6.0	6.0		5.0	6.0
Vehicle Extension (s)	3.0	3.0	3.0		3.0	3.0
Lane Grp Cap (vph)	417	377	1740		283	2377
v/s Ratio Prot	c0.20		c0.38		c0.08	0.35
v/s Ratio Perm		0.05			0.34	
v/c Ratio	0.79	0.18	0.75		0.64	0.53
Uniform Delay, d1	33.3	28.0	18.9		18.8	8.2
Progression Factor	1.00	1.00	1.00		1.00	1.00
Incremental Delay, d2	9.9	0.2	3.0		4.7	0.9
Delay (s)	43.1	28.2	21.9		23.5	9.1
Level of Service	D	C	C		C	A
Approach Delay (s)	36.3		21.9			10.9
Approach LOS	D		C			B

Intersection Summary			
HCM 2000 Control Delay	19.8	HCM 2000 Level of Service	B
HCM 2000 Volume to Capacity ratio	0.75		
Actuated Cycle Length (s)	95.0	Sum of lost time (s)	12.0
Intersection Capacity Utilization	73.6%	ICU Level of Service	D
Analysis Period (min)	15		

c Critical Lane Group

Lane Group	WBL	WBR	NBT	NBR	SBL	SBT
Lane Configurations						
Traffic Volume (vph)	294	258	1205	439	203	773
Future Volume (vph)	294	258	1205	439	203	773
Lane Util. Factor	1.00	1.00	0.95	0.95	1.00	0.95
Frt		0.850	0.960			
Flt Protected	0.950				0.950	
Satd. Flow (prot)	1668	1478	3431	0	1668	3505
Flt Permitted	0.950				0.062	
Satd. Flow (perm)	1668	1478	3431	0	109	3505
Satd. Flow (RTOR)		297	58			
Adj. Flow (vph)	338	297	1354	493	257	978
Lane Group Flow (vph)	338	297	1847	0	257	978
Turn Type	Prot	Perm	NA		pm+pt	NA
Protected Phases	8		2		1	6
Permitted Phases		8			6	
Detector Phase	8	8	2		1	6
Switch Phase						
Minimum Initial (s)	8.0	8.0	10.0		6.0	10.0
Minimum Split (s)	24.0	24.0	27.0		11.0	16.0
Total Split (s)	35.0	35.0	60.0		25.0	85.0
Total Split (%)	29.2%	29.2%	50.0%		20.8%	70.8%
Maximum Green (s)	29.0	29.0	54.0		20.0	79.0
Yellow Time (s)	4.0	4.0	4.0		3.0	4.0
All-Red Time (s)	2.0	2.0	2.0		2.0	2.0
Lost Time Adjust (s)	-2.0	-2.0	-2.0		-1.0	-2.0
Total Lost Time (s)	4.0	4.0	4.0		4.0	4.0
Lead/Lag			Lag		Lead	
Lead-Lag Optimize?			Yes		Yes	
Vehicle Extension (s)	3.0	3.0	3.0		3.0	3.0
Recall Mode	None	None	C-Max		None	C-Max
Walk Time (s)	7.0	7.0	7.0			
Flash Dont Walk (s)	10.0	10.0	14.0			
Pedestrian Calls (#/hr)	0	0	0			
v/c Ratio	0.84	0.51	1.04		0.83	0.40
Control Delay	62.8	7.4	61.6		53.8	8.7
Queue Delay	0.0	0.0	25.5		0.0	0.0
Total Delay	62.8	7.4	87.1		53.8	8.7
Queue Length 50th (ft)	245	0	~854		143	163
Queue Length 95th (ft)	#350	59	#985		197	167
Internal Link Dist (ft)	300		212			303
Turn Bay Length (ft)					100	
Base Capacity (vph)	430	602	1777		348	2428
Starvation Cap Reductn	0	0	491		0	0
Spillback Cap Reductn	0	0	0		0	0
Storage Cap Reductn	0	0	0		0	0
Reduced v/c Ratio	0.79	0.49	1.44		0.74	0.40

Intersection Summary
Cycle Length: 120

Actuated Cycle Length: 120
Offset: 0 (0%), Referenced to phase 2:NBT and 6:SBTL, Start of Green
Natural Cycle: 90
Control Type: Actuated-Coordinated
~ Volume exceeds capacity, queue is theoretically infinite.
Queue shown is maximum after two cycles.
95th percentile volume exceeds capacity, queue may be longer.
Queue shown is maximum after two cycles.

Splits and Phases: 1: Main Street & Trotter Road

Movement	WBL	WBR	NBT	NBR	SBL	SBT
Lane Configurations						
Traffic Volume (vph)	294	258	1205	439	203	773
Future Volume (vph)	294	258	1205	439	203	773
Ideal Flow (vphpl)	1900	1900	1900	1900	1900	1900
Lane Width	10	10	12	12	10	12
Total Lost time (s)	4.0	4.0	4.0		4.0	4.0
Lane Util. Factor	1.00	1.00	0.95		1.00	0.95
Frt	1.00	0.85	0.96		1.00	1.00
Flt Protected	0.95	1.00	1.00		0.95	1.00
Satd. Flow (prot)	1668	1478	3431		1668	3505
Flt Permitted	0.95	1.00	1.00		0.06	1.00
Satd. Flow (perm)	1668	1478	3431		109	3505
Peak-hour factor, PHF	0.87	0.87	0.89	0.89	0.79	0.79
Adj. Flow (vph)	338	297	1354	493	257	978
RTOR Reduction (vph)	0	226	28	0	0	0
Lane Group Flow (vph)	338	71	1819	0	257	978
Heavy Vehicles (%)	1%	2%	1%	1%	1%	3%
Turn Type	Prot	Perm	NA		pm+pt	NA
Protected Phases	8		2		1	6
Permitted Phases		8			6	
Actuated Green, G (s)	26.8	26.8	59.2		81.2	81.2
Effective Green, g (s)	28.8	28.8	61.2		82.2	83.2
Actuated g/C Ratio	0.24	0.24	0.51		0.69	0.69
Clearance Time (s)	6.0	6.0	6.0		5.0	6.0
Vehicle Extension (s)	3.0	3.0	3.0		3.0	3.0
Lane Grp Cap (vph)	400	354	1749		308	2430
v/s Ratio Prot	c0.20		c0.53		c0.12	0.28
v/s Ratio Perm		0.05			0.44	
v/c Ratio	0.84	0.20	1.04		0.83	0.40
Uniform Delay, d1	43.5	36.4	29.4		38.5	7.8
Progression Factor	1.00	1.00	1.00		1.00	1.00
Incremental Delay, d2	15.0	0.3	32.7		17.4	0.5
Delay (s)	58.5	36.7	62.1		55.9	8.3
Level of Service	E	D	E		E	A
Approach Delay (s)	48.3		62.1			18.2
Approach LOS	D		E			B

Intersection Summary			
HCM 2000 Control Delay	45.1	HCM 2000 Level of Service	D
HCM 2000 Volume to Capacity ratio	0.95		
Actuated Cycle Length (s)	120.0	Sum of lost time (s)	12.0
Intersection Capacity Utilization	84.9%	ICU Level of Service	E
Analysis Period (min)	15		

c Critical Lane Group

Lane Group	WBL	WBR	NBT	NBR	SBL	SBT
Lane Configurations						
Traffic Volume (vph)	413	307	897	298	186	1319
Future Volume (vph)	413	307	897	298	186	1319
Lane Util. Factor	1.00	1.00	0.95	0.95	1.00	0.95
Frt		0.850	0.963			
Flt Protected	0.950				0.950	
Satd. Flow (prot)	1668	1507	3476	0	1685	3574
Flt Permitted	0.950				0.102	
Satd. Flow (perm)	1668	1507	3476	0	181	3574
Satd. Flow (RTOR)		289	72			
Adj. Flow (vph)	566	421	965	320	198	1403
Lane Group Flow (vph)	566	421	1285	0	198	1403
Turn Type	Prot	Perm	NA		pm+pt	NA
Protected Phases	8		2		1	6
Permitted Phases		8			6	
Detector Phase	8	8	2		1	6
Switch Phase						
Minimum Initial (s)	8.0	8.0	10.0		6.0	10.0
Minimum Split (s)	24.0	24.0	27.0		11.0	16.0
Total Split (s)	25.0	25.0	49.0		16.0	65.0
Total Split (%)	27.8%	27.8%	54.4%		17.8%	72.2%
Maximum Green (s)	19.0	19.0	43.0		11.0	59.0
Yellow Time (s)	4.0	4.0	4.0		3.0	4.0
All-Red Time (s)	2.0	2.0	2.0		2.0	2.0
Lost Time Adjust (s)	-2.0	-2.0	-2.0		-1.0	-2.0
Total Lost Time (s)	4.0	4.0	4.0		4.0	4.0
Lead/Lag			Lag		Lead	
Lead-Lag Optimize?			Yes		Yes	
Vehicle Extension (s)	3.0	3.0	3.0		3.0	3.0
Recall Mode	None	None	C-Max		None	C-Max
Walk Time (s)	7.0	7.0	7.0			
Flash Dont Walk (s)	10.0	10.0	14.0			
Pedestrian Calls (#/hr)	0	0	0			
v/c Ratio	1.46	0.73	0.70		0.66	0.58
Control Delay	247.8	18.9	18.4		23.6	8.9
Queue Delay	0.0	0.0	49.0		0.0	0.0
Total Delay	247.8	18.9	67.3		23.6	8.9
Queue Length 50th (ft)	~444	63	267		43	194
Queue Length 95th (ft)	#477	93	352		115	247
Internal Link Dist (ft)	300		212			303
Turn Bay Length (ft)					100	
Base Capacity (vph)	389	573	1829		323	2422
Starvation Cap Reductn	0	0	670		0	0
Spillback Cap Reductn	0	0	0		0	0
Storage Cap Reductn	0	0	0		0	0
Reduced v/c Ratio	1.46	0.73	1.11		0.61	0.58

Intersection Summary
Cycle Length: 90

Actuated Cycle Length: 90
Offset: 0 (0%), Referenced to phase 2:NBT and 6:SBTL, Start of Green
Natural Cycle: 70
Control Type: Actuated-Coordinated
~ Volume exceeds capacity, queue is theoretically infinite.
Queue shown is maximum after two cycles.
95th percentile volume exceeds capacity, queue may be longer.
Queue shown is maximum after two cycles.

Splits and Phases: 1: Main Street & Trotter Road

Movement	WBL	WBR	NBT	NBR	SBL	SBT
Lane Configurations						
Traffic Volume (vph)	413	307	897	298	186	1319
Future Volume (vph)	413	307	897	298	186	1319
Ideal Flow (vphpl)	1900	1900	1900	1900	1900	1900
Lane Width	10	10	12	12	10	12
Total Lost time (s)	4.0	4.0	4.0		4.0	4.0
Lane Util. Factor	1.00	1.00	0.95		1.00	0.95
Frt	1.00	0.85	0.96		1.00	1.00
Flt Protected	0.95	1.00	1.00		0.95	1.00
Satd. Flow (prot)	1668	1507	3475		1685	3574
Flt Permitted	0.95	1.00	1.00		0.10	1.00
Satd. Flow (perm)	1668	1507	3475		180	3574
Peak-hour factor, PHF	0.73	0.73	0.93	0.93	0.94	0.94
Adj. Flow (vph)	566	421	965	320	198	1403
RTOR Reduction (vph)	0	222	35	0	0	0
Lane Group Flow (vph)	566	199	1250	0	198	1403
Heavy Vehicles (%)	1%	0%	0%	0%	0%	1%
Turn Type	Prot	Perm	NA		pm+pt	NA
Protected Phases	8		2		1	6
Permitted Phases		8			6	
Actuated Green, G (s)	19.0	19.0	44.5		59.0	59.0
Effective Green, g (s)	21.0	21.0	46.5		60.0	61.0
Actuated g/C Ratio	0.23	0.23	0.52		0.67	0.68
Clearance Time (s)	6.0	6.0	6.0		5.0	6.0
Vehicle Extension (s)	3.0	3.0	3.0		3.0	3.0
Lane Grp Cap (vph)	389	351	1795		295	2422
v/s Ratio Prot	c0.34		c0.36		c0.08	0.39
v/s Ratio Perm		0.13			0.37	
v/c Ratio	1.46	0.57	0.70		0.67	0.58
Uniform Delay, d1	34.5	30.5	16.4		15.2	7.7
Progression Factor	1.00	1.00	1.00		1.00	1.00
Incremental Delay, d2	218.6	2.1	2.3		5.9	1.0
Delay (s)	253.1	32.6	18.7		21.1	8.7
Level of Service	F	C	B		C	A
Approach Delay (s)	159.1		18.7			10.2
Approach LOS	F		B			B

Intersection Summary			
HCM 2000 Control Delay	51.0	HCM 2000 Level of Service	D
HCM 2000 Volume to Capacity ratio	0.90		
Actuated Cycle Length (s)	90.0	Sum of lost time (s)	12.0
Intersection Capacity Utilization	77.5%	ICU Level of Service	D
Analysis Period (min)	15		

c Critical Lane Group

Lane Group	WBL	WBR	NBT	NBR	SBL	SBT
Lane Configurations						
Traffic Volume (vph)	329	269	1034	281	170	1225
Future Volume (vph)	329	269	1034	281	170	1225
Lane Util. Factor	1.00	1.00	0.95	0.95	1.00	0.95
Frt		0.850	0.968			
Flt Protected	0.950				0.950	
Satd. Flow (prot)	1668	1507	3467	0	1685	3574
Flt Permitted	0.950				0.079	
Satd. Flow (perm)	1668	1507	3467	0	140	3574
Satd. Flow (RTOR)		277	42			
Adj. Flow (vph)	339	277	1077	293	181	1303
Lane Group Flow (vph)	339	277	1370	0	181	1303
Turn Type	Prot	Perm	NA		pm+pt	NA
Protected Phases	8		2		1	6
Permitted Phases		8			6	
Detector Phase	8	8	2		1	6
Switch Phase						
Minimum Initial (s)	8.0	8.0	10.0		6.0	10.0
Minimum Split (s)	24.0	24.0	27.0		11.0	16.0
Total Split (s)	30.0	30.0	40.0		25.0	65.0
Total Split (%)	31.6%	31.6%	42.1%		26.3%	68.4%
Maximum Green (s)	24.0	24.0	34.0		20.0	59.0
Yellow Time (s)	4.0	4.0	4.0		3.0	4.0
All-Red Time (s)	2.0	2.0	2.0		2.0	2.0
Lost Time Adjust (s)	-2.0	-2.0	-2.0		-1.0	-2.0
Total Lost Time (s)	4.0	4.0	4.0		4.0	4.0
Lead/Lag			Lag		Lead	
Lead-Lag Optimize?			Yes		Yes	
Vehicle Extension (s)	3.0	3.0	3.0		3.0	3.0
Recall Mode	None	None	C-Max		None	C-Max
Walk Time (s)	7.0	7.0	7.0			
Flash Dont Walk (s)	10.0	10.0	14.0			
Pedestrian Calls (#/hr)	0	0	0			
v/c Ratio	0.81	0.47	0.78		0.65	0.55
Control Delay	48.6	6.4	24.4		27.2	9.9
Queue Delay	0.0	0.0	48.5		0.0	0.0
Total Delay	48.6	6.4	72.9		27.2	9.9
Queue Length 50th (ft)	186	0	340		56	210
Queue Length 95th (ft)	#310	59	#544		120	265
Internal Link Dist (ft)	300		212			303
Turn Bay Length (ft)					100	
Base Capacity (vph)	456	613	1753		434	2369
Starvation Cap Reductn	0	0	588		0	0
Spillback Cap Reductn	0	0	0		0	0
Storage Cap Reductn	0	0	0		0	0
Reduced v/c Ratio	0.74	0.45	1.18		0.42	0.55

Intersection Summary
Cycle Length: 95

Actuated Cycle Length: 95
Offset: 0 (0%), Referenced to phase 2:NBT and 6:SBTL, Start of Green
Natural Cycle: 65
Control Type: Actuated-Coordinated
95th percentile volume exceeds capacity, queue may be longer.
Queue shown is maximum after two cycles.

Splits and Phases: 1: Main Street & Trotter Road

Movement	WBL	WBR	NBT	NBR	SBL	SBT
Lane Configurations						
Traffic Volume (vph)	329	269	1034	281	170	1225
Future Volume (vph)	329	269	1034	281	170	1225
Ideal Flow (vphpl)	1900	1900	1900	1900	1900	1900
Lane Width	10	10	12	12	10	12
Total Lost time (s)	4.0	4.0	4.0		4.0	4.0
Lane Util. Factor	1.00	1.00	0.95		1.00	0.95
Frt	1.00	0.85	0.97		1.00	1.00
Flt Protected	0.95	1.00	1.00		0.95	1.00
Satd. Flow (prot)	1668	1507	3467		1685	3574
Flt Permitted	0.95	1.00	1.00		0.08	1.00
Satd. Flow (perm)	1668	1507	3467		140	3574
Peak-hour factor, PHF	0.97	0.97	0.96	0.96	0.94	0.94
Adj. Flow (vph)	339	277	1077	293	181	1303
RTOR Reduction (vph)	0	207	21	0	0	0
Lane Group Flow (vph)	339	70	1349	0	181	1303
Heavy Vehicles (%)	1%	0%	1%	0%	0%	1%
Turn Type	Prot	Perm	NA		pm+pt	NA
Protected Phases	8		2		1	6
Permitted Phases		8			6	
Actuated Green, G (s)	22.0	22.0	45.5		61.0	61.0
Effective Green, g (s)	24.0	24.0	47.5		62.0	63.0
Actuated g/C Ratio	0.25	0.25	0.50		0.65	0.66
Clearance Time (s)	6.0	6.0	6.0		5.0	6.0
Vehicle Extension (s)	3.0	3.0	3.0		3.0	3.0
Lane Grp Cap (vph)	421	380	1733		278	2370
v/s Ratio Prot	c0.20		c0.39		c0.08	0.36
v/s Ratio Perm		0.05			0.34	
v/c Ratio	0.81	0.18	0.78		0.65	0.55
Uniform Delay, d1	33.3	27.8	19.4		20.5	8.5
Progression Factor	1.00	1.00	1.00		1.00	1.00
Incremental Delay, d2	10.7	0.2	3.5		5.4	0.9
Delay (s)	44.0	28.1	23.0		25.8	9.4
Level of Service	D	C	C		C	A
Approach Delay (s)	36.8		23.0			11.4
Approach LOS	D		C			B

Intersection Summary			
HCM 2000 Control Delay	20.5	HCM 2000 Level of Service	C
HCM 2000 Volume to Capacity ratio	0.77		
Actuated Cycle Length (s)	95.0	Sum of lost time (s)	12.0
Intersection Capacity Utilization	75.2%	ICU Level of Service	D
Analysis Period (min)	15		

c Critical Lane Group

Lane Group	WBL	WBR	NBT	NBR	SBL	SBT
Lane Configurations						
Traffic Volume (vph)	294	258	1205	439	203	773
Future Volume (vph)	294	258	1205	439	203	773
Lane Util. Factor	1.00	1.00	0.95	0.95	1.00	0.95
Frt		0.850	0.960			
Flt Protected	0.950				0.950	
Satd. Flow (prot)	1668	1478	3431	0	1668	3505
Flt Permitted	0.950				0.080	
Satd. Flow (perm)	1668	1478	3431	0	140	3505
Satd. Flow (RTOR)		225	86			
Adj. Flow (vph)	338	297	1354	493	257	978
Lane Group Flow (vph)	338	297	1847	0	257	978
Turn Type	Prot	Perm	NA		pm+pt	NA
Protected Phases	8		2		1	6
Permitted Phases		8			6	
Detector Phase	8	8	2		1	6
Switch Phase						
Minimum Initial (s)	8.0	8.0	10.0		6.0	10.0
Minimum Split (s)	24.0	24.0	27.0		11.0	16.0
Total Split (s)	24.0	24.0	51.0		15.0	66.0
Total Split (%)	26.7%	26.7%	56.7%		16.7%	73.3%
Maximum Green (s)	18.0	18.0	45.0		10.0	60.0
Yellow Time (s)	4.0	4.0	4.0		3.0	4.0
All-Red Time (s)	2.0	2.0	2.0		2.0	2.0
Lost Time Adjust (s)	-2.0	-2.0	-2.0		-1.0	-2.0
Total Lost Time (s)	4.0	4.0	4.0		4.0	4.0
Lead/Lag			Lag		Lead	
Lead-Lag Optimize?			Yes		Yes	
Vehicle Extension (s)	3.0	3.0	3.0		3.0	3.0
Recall Mode	None	None	C-Max		None	C-Max
Walk Time (s)	7.0	7.0	7.0			
Flash Dont Walk (s)	10.0	10.0	14.0			
Pedestrian Calls (#/hr)	0	0	0			
v/c Ratio	0.91	0.59	1.01		0.91	0.41
Control Delay	65.4	14.0	31.2		57.6	6.6
Queue Delay	0.0	0.0	0.0		0.0	0.0
Total Delay	65.4	14.0	31.2		57.6	6.7
Queue Length 50th (ft)	188	34	~177		95	109
Queue Length 95th (ft)	#328	104	m#631		#183	117
Internal Link Dist (ft)	300		212			303
Turn Bay Length (ft)					100	
Base Capacity (vph)	370	503	1832		283	2414
Starvation Cap Reductn	0	0	0		0	0
Spillback Cap Reductn	0	0	0		0	50
Storage Cap Reductn	0	0	0		0	0
Reduced v/c Ratio	0.91	0.59	1.01		0.91	0.41

Intersection Summary
Cycle Length: 90

Actuated Cycle Length: 90
Offset: 72 (80%), Referenced to phase 2:NBT and 6:SBTL, Start of Green
Natural Cycle: 90
Control Type: Actuated-Coordinated
~ Volume exceeds capacity, queue is theoretically infinite.
Queue shown is maximum after two cycles.
95th percentile volume exceeds capacity, queue may be longer.
Queue shown is maximum after two cycles.
m Volume for 95th percentile queue is metered by upstream signal.

Splits and Phases: 1: Main Street & Trotter Road

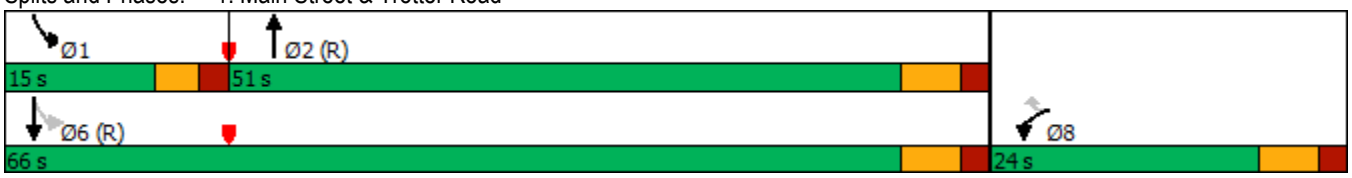

Movement	WBL	WBR	NBT	NBR	SBL	SBT
Lane Configurations						
Traffic Volume (vph)	294	258	1205	439	203	773
Future Volume (vph)	294	258	1205	439	203	773
Ideal Flow (vphpl)	1900	1900	1900	1900	1900	1900
Lane Width	10	10	12	12	10	12
Total Lost time (s)	4.0	4.0	4.0		4.0	4.0
Lane Util. Factor	1.00	1.00	0.95		1.00	0.95
Frt	1.00	0.85	0.96		1.00	1.00
Flt Protected	0.95	1.00	1.00		0.95	1.00
Satd. Flow (prot)	1668	1478	3431		1668	3505
Flt Permitted	0.95	1.00	1.00		0.08	1.00
Satd. Flow (perm)	1668	1478	3431		140	3505
Peak-hour factor, PHF	0.87	0.87	0.89	0.89	0.79	0.79
Adj. Flow (vph)	338	297	1354	493	257	978
RTOR Reduction (vph)	0	175	41	0	0	0
Lane Group Flow (vph)	338	122	1806	0	257	978
Heavy Vehicles (%)	1%	2%	1%	1%	1%	3%
Turn Type	Prot	Perm	NA		pm+pt	NA
Protected Phases	8		2		1	6
Permitted Phases		8			6	
Actuated Green, G (s)	18.0	18.0	45.0		60.0	60.0
Effective Green, g (s)	20.0	20.0	47.0		61.0	62.0
Actuated g/C Ratio	0.22	0.22	0.52		0.68	0.69
Clearance Time (s)	6.0	6.0	6.0		5.0	6.0
Vehicle Extension (s)	3.0	3.0	3.0		3.0	3.0
Lane Grp Cap (vph)	370	328	1791		281	2414
v/s Ratio Prot	c0.20		c0.53		c0.11	0.28
v/s Ratio Perm		0.08			0.51	
v/c Ratio	0.91	0.37	1.01		0.91	0.41
Uniform Delay, d1	34.2	29.7	21.5		28.0	6.0
Progression Factor	1.00	1.00	0.48		1.00	1.00
Incremental Delay, d2	26.3	0.7	19.1		32.0	0.5
Delay (s)	60.4	30.4	29.5		60.0	6.5
Level of Service	E	C	C		E	A
Approach Delay (s)	46.4		29.5			17.7
Approach LOS	D		C			B

Intersection Summary			
HCM 2000 Control Delay	28.4	HCM 2000 Level of Service	C
HCM 2000 Volume to Capacity ratio	0.97		
Actuated Cycle Length (s)	90.0	Sum of lost time (s)	12.0
Intersection Capacity Utilization	84.9%	ICU Level of Service	E
Analysis Period (min)	15		

c Critical Lane Group

Lane Group	WBL	WBR	NBT	NBR	SBL	SBT
Lane Configurations						
Traffic Volume (vph)	413	307	897	298	186	1319
Future Volume (vph)	413	307	897	298	186	1319
Lane Util. Factor	1.00	1.00	0.95	0.95	1.00	0.95
Frt		0.850	0.963			
Flt Protected	0.950				0.950	
Satd. Flow (prot)	1668	1507	3476	0	1685	3574
Flt Permitted	0.950				0.075	
Satd. Flow (perm)	1668	1507	3476	0	133	3574
Satd. Flow (RTOR)		259	45			
Adj. Flow (vph)	566	421	965	320	198	1403
Lane Group Flow (vph)	566	421	1285	0	198	1403
Turn Type	Prot	Perm	NA		pm+pt	NA
Protected Phases	8		2		1	6
Permitted Phases		8			6	
Detector Phase	8	8	2		1	6
Switch Phase						
Minimum Initial (s)	8.0	8.0	10.0		6.0	10.0
Minimum Split (s)	24.0	24.0	27.0		11.0	16.0
Total Split (s)	51.0	51.0	52.0		17.0	69.0
Total Split (%)	42.5%	42.5%	43.3%		14.2%	57.5%
Maximum Green (s)	45.0	45.0	46.0		12.0	63.0
Yellow Time (s)	4.0	4.0	4.0		3.0	4.0
All-Red Time (s)	2.0	2.0	2.0		2.0	2.0
Lost Time Adjust (s)	-2.0	-2.0	-2.0		-1.0	-2.0
Total Lost Time (s)	4.0	4.0	4.0		4.0	4.0
Lead/Lag			Lag		Lead	
Lead-Lag Optimize?			Yes		Yes	
Vehicle Extension (s)	3.0	3.0	3.0		3.0	3.0
Recall Mode	None	None	C-Max		None	C-Max
Walk Time (s)	7.0	7.0	7.0			
Flash Dont Walk (s)	10.0	10.0	14.0			
Pedestrian Calls (#/hr)	0	0	0			
v/c Ratio	0.91	0.58	0.86		0.83	0.70
Control Delay	55.6	14.0	22.5		55.5	22.0
Queue Delay	6.4	0.0	0.1		0.0	9.2
Total Delay	62.0	14.0	22.6		55.5	31.2
Queue Length 50th (ft)	398	90	484		103	413
Queue Length 95th (ft)	402	106	#620		#232	499
Internal Link Dist (ft)	300		212			303
Turn Bay Length (ft)					100	
Base Capacity (vph)	653	747	1488		245	2001
Starvation Cap Reductn	0	0	5		0	0
Spillback Cap Reductn	57	0	0		0	575
Storage Cap Reductn	0	0	0		0	0
Reduced v/c Ratio	0.95	0.56	0.87		0.81	0.98

Intersection Summary
Cycle Length: 120

Actuated Cycle Length: 120
Offset: 104 (87%), Referenced to phase 2:NBT and 6:SBTL, Start of Green
Natural Cycle: 70
Control Type: Actuated-Coordinated
95th percentile volume exceeds capacity, queue may be longer.
Queue shown is maximum after two cycles.

Splits and Phases: 1: Main Street & Trotter Road

Movement	WBL	WBR	NBT	NBR	SBL	SBT
Lane Configurations						
Traffic Volume (vph)	413	307	897	298	186	1319
Future Volume (vph)	413	307	897	298	186	1319
Ideal Flow (vphpl)	1900	1900	1900	1900	1900	1900
Lane Width	10	10	12	12	10	12
Total Lost time (s)	4.0	4.0	4.0		4.0	4.0
Lane Util. Factor	1.00	1.00	0.95		1.00	0.95
Frt	1.00	0.85	0.96		1.00	1.00
Flt Protected	0.95	1.00	1.00		0.95	1.00
Satd. Flow (prot)	1668	1507	3475		1685	3574
Flt Permitted	0.95	1.00	1.00		0.07	1.00
Satd. Flow (perm)	1668	1507	3475		133	3574
Peak-hour factor, PHF	0.73	0.73	0.93	0.93	0.94	0.94
Adj. Flow (vph)	566	421	965	320	198	1403
RTOR Reduction (vph)	0	162	26	0	0	0
Lane Group Flow (vph)	566	259	1259	0	198	1403
Heavy Vehicles (%)	1%	0%	0%	0%	0%	1%
Turn Type	Prot	Perm	NA		pm+pt	NA
Protected Phases	8		2		1	6
Permitted Phases		8			6	
Actuated Green, G (s)	42.8	42.8	48.5		65.2	65.2
Effective Green, g (s)	44.8	44.8	50.5		66.2	67.2
Actuated g/C Ratio	0.37	0.37	0.42		0.55	0.56
Clearance Time (s)	6.0	6.0	6.0		5.0	6.0
Vehicle Extension (s)	3.0	3.0	3.0		3.0	3.0
Lane Grp Cap (vph)	622	562	1462		237	2001
v/s Ratio Prot	c0.34		c0.36		c0.09	0.39
v/s Ratio Perm		0.17			0.37	
v/c Ratio	0.91	0.46	0.86		0.84	0.70
Uniform Delay, d1	35.7	28.5	31.6		33.0	19.1
Progression Factor	1.00	1.00	0.50		1.00	1.00
Incremental Delay, d2	17.2	0.6	6.0		21.7	2.1
Delay (s)	52.9	29.1	21.9		54.7	21.2
Level of Service	D	C	C		D	C
Approach Delay (s)	42.7		21.9			25.3
Approach LOS	D		C			C

Intersection Summary			
HCM 2000 Control Delay	28.6	HCM 2000 Level of Service	C
HCM 2000 Volume to Capacity ratio	0.88		
Actuated Cycle Length (s)	120.0	Sum of lost time (s)	12.0
Intersection Capacity Utilization	77.5%	ICU Level of Service	D
Analysis Period (min)	15		

c Critical Lane Group

Lane Group	WBL	WBR	NBT	NBR	SBL	SBT
Lane Configurations						
Traffic Volume (vph)	329	269	1034	281	170	1225
Future Volume (vph)	329	269	1034	281	170	1225
Lane Util. Factor	1.00	1.00	0.95	0.95	1.00	0.95
Frt		0.850	0.968			
Flt Protected	0.950				0.950	
Satd. Flow (prot)	1668	1507	3467	0	1685	3574
Flt Permitted	0.950				0.091	
Satd. Flow (perm)	1668	1507	3467	0	161	3574
Satd. Flow (RTOR)		274	40			
Adj. Flow (vph)	339	277	1077	293	181	1303
Lane Group Flow (vph)	339	277	1370	0	181	1303
Turn Type	Prot	Perm	NA		pm+pt	NA
Protected Phases	8		2		1	6
Permitted Phases		8			6	
Detector Phase	8	8	2		1	6
Switch Phase						
Minimum Initial (s)	8.0	8.0	10.0		6.0	10.0
Minimum Split (s)	24.0	24.0	27.0		11.0	16.0
Total Split (s)	38.0	38.0	62.0		20.0	82.0
Total Split (%)	31.7%	31.7%	51.7%		16.7%	68.3%
Maximum Green (s)	32.0	32.0	56.0		15.0	76.0
Yellow Time (s)	4.0	4.0	4.0		3.0	4.0
All-Red Time (s)	2.0	2.0	2.0		2.0	2.0
Lost Time Adjust (s)	-2.0	-2.0	-2.0		-1.0	-2.0
Total Lost Time (s)	4.0	4.0	4.0		4.0	4.0
Lead/Lag			Lag		Lead	
Lead-Lag Optimize?			Yes		Yes	
Vehicle Extension (s)	3.0	3.0	3.0		3.0	3.0
Recall Mode	None	None	C-Max		None	C-Max
Walk Time (s)	7.0	7.0	7.0			
Flash Dont Walk (s)	10.0	10.0	14.0			
Pedestrian Calls (#/hr)	0	0	0			
v/c Ratio	0.82	0.48	0.72		0.66	0.53
Control Delay	58.3	7.0	12.2		28.2	10.9
Queue Delay	1.2	0.0	0.3		0.0	0.0
Total Delay	59.4	7.0	12.4		28.2	11.0
Queue Length 50th (ft)	244	2	146		57	250
Queue Length 95th (ft)	348	67	197		138	326
Internal Link Dist (ft)	300		212			303
Turn Bay Length (ft)					100	
Base Capacity (vph)	472	623	1897		313	2444
Starvation Cap Reductn	0	0	111		0	0
Spillback Cap Reductn	33	0	0		0	86
Storage Cap Reductn	0	0	0		0	0
Reduced v/c Ratio	0.77	0.44	0.77		0.58	0.55

Intersection Summary
Cycle Length: 120

Actuated Cycle Length: 120
Offset: 100 (83%), Referenced to phase 2:NBT and 6:SBTL, Start of Green
Natural Cycle: 65
Control Type: Actuated-Coordinated

Splits and Phases: 1: Main Street & Trotter Road

Movement	WBL	WBR	NBT	NBR	SBL	SBT
Lane Configurations						
Traffic Volume (vph)	329	269	1034	281	170	1225
Future Volume (vph)	329	269	1034	281	170	1225
Ideal Flow (vphpl)	1900	1900	1900	1900	1900	1900
Lane Width	10	10	12	12	10	12
Total Lost time (s)	4.0	4.0	4.0		4.0	4.0
Lane Util. Factor	1.00	1.00	0.95		1.00	0.95
Frt	1.00	0.85	0.97		1.00	1.00
Flt Protected	0.95	1.00	1.00		0.95	1.00
Satd. Flow (prot)	1668	1507	3467		1685	3574
Flt Permitted	0.95	1.00	1.00		0.09	1.00
Satd. Flow (perm)	1668	1507	3467		161	3574
Peak-hour factor, PHF	0.97	0.97	0.96	0.96	0.94	0.94
Adj. Flow (vph)	339	277	1077	293	181	1303
RTOR Reduction (vph)	0	206	18	0	0	0
Lane Group Flow (vph)	339	71	1352	0	181	1303
Heavy Vehicles (%)	1%	0%	1%	0%	0%	1%
Turn Type	Prot	Perm	NA		pm+pt	NA
Protected Phases	8		2		1	6
Permitted Phases		8			6	
Actuated Green, G (s)	27.9	27.9	63.0		80.1	80.1
Effective Green, g (s)	29.9	29.9	65.0		81.1	82.1
Actuated g/C Ratio	0.25	0.25	0.54		0.68	0.68
Clearance Time (s)	6.0	6.0	6.0		5.0	6.0
Vehicle Extension (s)	3.0	3.0	3.0		3.0	3.0
Lane Grp Cap (vph)	415	375	1877		275	2445
v/s Ratio Prot	c0.20		c0.39		c0.07	0.36
v/s Ratio Perm		0.05			0.37	
v/c Ratio	0.82	0.19	0.72		0.66	0.53
Uniform Delay, d1	42.5	35.5	20.7		21.2	9.4
Progression Factor	1.00	1.00	0.48		1.00	1.00
Incremental Delay, d2	11.8	0.2	1.8		5.6	0.8
Delay (s)	54.3	35.8	11.6		26.8	10.3
Level of Service	D	D	B		C	B
Approach Delay (s)	45.9		11.6			12.3
Approach LOS	D		B			B

Intersection Summary			
HCM 2000 Control Delay	18.0	HCM 2000 Level of Service	B
HCM 2000 Volume to Capacity ratio	0.74		
Actuated Cycle Length (s)	120.0	Sum of lost time (s)	12.0
Intersection Capacity Utilization	75.2%	ICU Level of Service	D
Analysis Period (min)	15		

c Critical Lane Group

Main Street at Pond Street

Lane Group	NBL	NBT	NBR	SBL	SBT	SBR	SEL	SET	SER	NWL	NWT	NWR
Lane Configurations												
Traffic Volume (vph)	136	780	11	141	500	71	80	94	98	5	220	398
Future Volume (vph)	136	780	11	141	500	71	80	94	98	5	220	398
Lane Util. Factor	1.00	0.95	0.95	1.00	0.95	1.00	1.00	1.00	1.00	1.00	1.00	1.00
Frt		0.998				0.850		0.923				0.850
Flt Protected	0.950			0.950			0.950				0.999	
Satd. Flow (prot)	1685	3533	0	1668	3539	1599	1728	1678	0	0	1835	1561
Flt Permitted	0.950			0.950			0.274				0.993	
Satd. Flow (perm)	1685	3533	0	1668	3539	1599	498	1678	0	0	1824	1561
Satd. Flow (RTOR)		1				82		33				341
Adj. Flow (vph)	142	813	11	158	562	80	89	104	109	5	242	437
Lane Group Flow (vph)	142	824	0	158	562	80	89	213	0	0	247	437
Turn Type	Prot	NA		Prot	NA	Perm	Perm	NA		Perm	NA	pm+ov
Protected Phases	5	2		1	6			4			8	1
Permitted Phases						6	4			8		8
Detector Phase	5	2		1	6	6	4	4		8	8	1
Switch Phase												
Minimum Initial (s)	6.0	10.0		6.0	10.0	10.0	8.0	8.0		8.0	8.0	6.0
Minimum Split (s)	12.0	24.0		12.0	24.0	24.0	24.0	24.0		24.0	24.0	12.0
Total Split (s)	15.0	60.0		30.0	75.0	75.0	35.0	35.0		35.0	35.0	30.0
Total Split (%)	10.2%	40.8%		20.4%	51.0%	51.0%	23.8%	23.8%		23.8%	23.8%	20.4%
Maximum Green (s)	9.0	54.0		24.0	69.0	69.0	29.0	29.0		29.0	29.0	24.0
Yellow Time (s)	4.0	4.0		4.0	4.0	4.0	4.0	4.0		4.0	4.0	4.0
All-Red Time (s)	2.0	2.0		2.0	2.0	2.0	2.0	2.0		2.0	2.0	2.0
Lost Time Adjust (s)	-2.0	-2.0		-2.0	-2.0	-2.0	-2.0	-2.0			-2.0	-2.0
Total Lost Time (s)	4.0	4.0		4.0	4.0	4.0	4.0	4.0			4.0	4.0
Lead/Lag	Lead	Lag		Lead	Lag	Lag						Lead
Lead-Lag Optimize?	Yes	Yes		Yes	Yes	Yes						Yes
Vehicle Extension (s)	3.0	3.0		3.0	3.0	3.0	3.0	3.0		3.0	3.0	3.0
Recall Mode	None	C-Max		None	C-Max	C-Max	None	None		None	None	None
Walk Time (s)		7.0			7.0	7.0						
Flash Dont Walk (s)		11.0			7.0	7.0						
Pedestrian Calls (#/hr)		0			0	0						
v/c Ratio	0.51	0.40		0.66	0.28	0.09	0.97	0.63			0.73	0.56
Control Delay	62.9	18.3		71.6	17.5	3.3	141.9	54.3			68.8	10.0
Queue Delay	0.0	0.0		2.4	2.2	0.0	0.0	0.0			0.0	0.0
Total Delay	62.9	18.3		74.0	19.7	3.3	141.9	54.3			68.8	10.0
Queue Length 50th (ft)	127	227		145	147	0	83	156			218	60
Queue Length 95th (ft)	197	313		209	190	24	#192	246			317	147
Internal Link Dist (ft)		355			212			463			459	
Turn Bay Length (ft)	100			100		60	340					330
Base Capacity (vph)	280	2075		301	2002	940	105	379			384	821
Starvation Cap Reductn	0	0		63	1265	0	0	0			0	0
Spillback Cap Reductn	0	0		0	0	0	0	0			0	0
Storage Cap Reductn	0	0		0	0	0	0	0			0	0
Reduced v/c Ratio	0.51	0.40		0.66	0.76	0.09	0.85	0.56			0.64	0.53

Intersection Summary
Cycle Length: 147

Lane Group	Ø9
Lane Configurations	
Traffic Volume (vph)	
Future Volume (vph)	
Lane Util. Factor	
Frt	
Flt Protected	
Satd. Flow (prot)	
Flt Permitted	
Satd. Flow (perm)	
Satd. Flow (RTOR)	
Adj. Flow (vph)	
Lane Group Flow (vph)	
Turn Type	
Protected Phases	9
Permitted Phases	
Detector Phase	
Switch Phase	
Minimum Initial (s)	5.0
Minimum Split (s)	22.0
Total Split (s)	22.0
Total Split (%)	15%
Maximum Green (s)	20.0
Yellow Time (s)	2.0
All-Red Time (s)	0.0
Lost Time Adjust (s)	
Total Lost Time (s)	
Lead/Lag	
Lead-Lag Optimize?	
Vehicle Extension (s)	3.0
Recall Mode	None
Walk Time (s)	7.0
Flash Dont Walk (s)	13.0
Pedestrian Calls (#/hr)	0
v/c Ratio	
Control Delay	
Queue Delay	
Total Delay	
Queue Length 50th (ft)	
Queue Length 95th (ft)	
Internal Link Dist (ft)	
Turn Bay Length (ft)	
Base Capacity (vph)	
Starvation Cap Reductn	
Spillback Cap Reductn	
Storage Cap Reductn	
Reduced v/c Ratio	

Intersection Summary

Actuated Cycle Length: 147
Offset: 0 (0%), Referenced to phase 2:NBT and 6:SBT, Start of Green, Master Intersection
Natural Cycle: 85
Control Type: Actuated-Coordinated
95th percentile volume exceeds capacity, queue may be longer.
Queue shown is maximum after two cycles.

Splits and Phases: 2: Main Street & Pond Street

Movement	NBL	NBT	NBR	SBL	SBT	SBR	SEL	SET	SER	NWL	NWT	NWR
Lane Configurations												
Traffic Volume (vph)	136	780	11	141	500	71	80	94	98	5	220	398
Future Volume (vph)	136	780	11	141	500	71	80	94	98	5	220	398
Ideal Flow (vphpl)	1900	1900	1900	1900	1900	1900	1900	1900	1900	1900	1900	1900
Lane Width	10	12	12	10	12	12	11	11	12	12	11	11
Total Lost time (s)	4.0	4.0		4.0	4.0	4.0	4.0	4.0			4.0	4.0
Lane Util. Factor	1.00	0.95		1.00	0.95	1.00	1.00	1.00			1.00	1.00
Frt	1.00	1.00		1.00	1.00	0.85	1.00	0.92			1.00	0.85
Flt Protected	0.95	1.00		0.95	1.00	1.00	0.95	1.00			1.00	1.00
Satd. Flow (prot)	1685	3533		1668	3539	1599	1728	1679			1835	1561
Flt Permitted	0.95	1.00		0.95	1.00	1.00	0.27	1.00			0.99	1.00
Satd. Flow (perm)	1685	3533		1668	3539	1599	498	1679			1824	1561
Peak-hour factor, PHF	0.96	0.96	0.96	0.89	0.89	0.89	0.90	0.90	0.90	0.91	0.91	0.91
Adj. Flow (vph)	142	812	11	158	562	80	89	104	109	5	242	437
RTOR Reduction (vph)	0	0	0	0	0	35	0	27	0	0	0	228
Lane Group Flow (vph)	142	824	0	158	562	45	89	186	0	0	247	209
Heavy Vehicles (%)	0%	2%	0%	1%	2%	1%	1%	0%	2%	0%	0%	0%
Turn Type	Prot	NA		Prot	NA	Perm	Perm	NA		Perm	NA	pm+ov
Protected Phases	5	2		1	6			4			8	1
Permitted Phases						6	4			8		8
Actuated Green, G (s)	22.5	84.3		19.3	81.1	81.1	25.4	25.4			25.4	44.7
Effective Green, g (s)	24.5	86.3		21.3	83.1	83.1	27.4	27.4			27.4	48.7
Actuated g/C Ratio	0.17	0.59		0.14	0.57	0.57	0.19	0.19			0.19	0.33
Clearance Time (s)	6.0	6.0		6.0	6.0	6.0	6.0	6.0			6.0	6.0
Vehicle Extension (s)	3.0	3.0		3.0	3.0	3.0	3.0	3.0			3.0	3.0
Lane Grp Cap (vph)	280	2074		241	2000	903	92	312			339	559
v/s Ratio Prot	0.08	c0.23		c0.09	0.16			0.11				0.05
v/s Ratio Perm						0.03	c0.18				0.14	0.08
v/c Ratio	0.51	0.40		0.66	0.28	0.05	0.97	0.60			0.73	0.37
Uniform Delay, d1	55.8	16.3		59.4	16.5	14.3	59.4	54.7			56.3	37.5
Progression Factor	1.00	1.00		1.00	1.00	1.00	1.00	1.00			1.00	1.00
Incremental Delay, d2	1.4	0.6		6.3	0.4	0.1	82.3	3.1			7.6	0.4
Delay (s)	57.2	16.9		65.7	16.9	14.4	141.6	57.8			63.9	37.9
Level of Service	E	B		E	B	B	F	E			E	D
Approach Delay (s)		22.8			26.3			82.5			47.3	
Approach LOS		C			C			F			D	

Intersection Summary			
HCM 2000 Control Delay	36.5	HCM 2000 Level of Service	D
HCM 2000 Volume to Capacity ratio	0.56		
Actuated Cycle Length (s)	147.0	Sum of lost time (s)	14.0
Intersection Capacity Utilization	67.5%	ICU Level of Service	C
Analysis Period (min)	15		

c Critical Lane Group

Lane Group	NBL	NBT	NBR	SBL	SBT	SBR	SEL	SET	SER	NWL	NWT	NWR
Lane Configurations												
Traffic Volume (vph)	100	594	31	311	839	107	39	234	184	19	87	257
Future Volume (vph)	100	594	31	311	839	107	39	234	184	19	87	257
Lane Util. Factor	1.00	0.95	0.95	1.00	0.95	1.00	1.00	1.00	1.00	1.00	1.00	1.00
Frt		0.993				0.850		0.934				0.850
Flt Protected	0.950			0.950			0.950				0.991	
Satd. Flow (prot)	1685	3585	0	1668	3505	1615	1694	1708	0	0	1820	1561
Flt Permitted	0.950			0.950			0.588				0.299	
Satd. Flow (perm)	1685	3585	0	1668	3505	1615	1049	1708	0	0	549	1561
Satd. Flow (RTOR)		4				82		24				289
Adj. Flow (vph)	112	667	35	324	874	111	41	246	194	21	98	289
Lane Group Flow (vph)	112	702	0	324	874	111	41	440	0	0	119	289
Turn Type	Prot	NA		Prot	NA	Perm	Perm	NA		Perm	NA	pm+ov
Protected Phases	5	2		1	6			4			8	1
Permitted Phases						6	4			8		8
Detector Phase	5	2		1	6	6	4	4		8	8	1
Switch Phase												
Minimum Initial (s)	6.0	10.0		6.0	10.0	10.0	8.0	8.0		8.0	8.0	6.0
Minimum Split (s)	12.0	24.0		12.0	24.0	24.0	24.0	24.0		24.0	24.0	12.0
Total Split (s)	15.0	60.0		30.0	75.0	75.0	35.0	35.0		35.0	35.0	30.0
Total Split (%)	10.2%	40.8%		20.4%	51.0%	51.0%	23.8%	23.8%		23.8%	23.8%	20.4%
Maximum Green (s)	9.0	54.0		24.0	69.0	69.0	29.0	29.0		29.0	29.0	24.0
Yellow Time (s)	4.0	4.0		4.0	4.0	4.0	4.0	4.0		4.0	4.0	4.0
All-Red Time (s)	2.0	2.0		2.0	2.0	2.0	2.0	2.0		2.0	2.0	2.0
Lost Time Adjust (s)	-2.0	-2.0		-2.0	-2.0	-2.0	-2.0	-2.0			-2.0	-2.0
Total Lost Time (s)	4.0	4.0		4.0	4.0	4.0	4.0	4.0			4.0	4.0
Lead/Lag	Lead	Lag		Lead	Lag	Lag						Lead
Lead-Lag Optimize?	Yes	Yes		Yes	Yes	Yes						Yes
Vehicle Extension (s)	3.0	3.0		3.0	3.0	3.0	3.0	3.0		3.0	3.0	3.0
Recall Mode	None	C-Max		None	C-Max	C-Max	None	None		None	None	None
Walk Time (s)		7.0			7.0	7.0						
Flash Dont Walk (s)		11.0			7.0	7.0						
Pedestrian Calls (#/hr)		0			0	0						
v/c Ratio	0.53	0.47		0.67	0.43	0.11	0.19	1.16			1.03	0.30
Control Delay	68.9	32.3		53.5	18.3	5.1	50.4	145.0			148.8	2.6
Queue Delay	0.0	0.0		59.2	21.5	0.9	0.0	0.0			0.0	0.0
Total Delay	68.9	32.3		112.7	39.8	6.0	50.4	145.0			148.8	2.6
Queue Length 50th (ft)	102	247		280	237	12	33	~480			~121	0
Queue Length 95th (ft)	162	316		378	306	42	70	#701			#253	41
Internal Link Dist (ft)		355			212			463			459	
Turn Bay Length (ft)	100			100		60	340					330
Base Capacity (vph)	211	1491		487	2038	973	221	379			115	963
Starvation Cap Reductn	0	0		221	1180	666	0	0			0	0
Spillback Cap Reductn	0	0		0	0	0	0	0			0	0
Storage Cap Reductn	0	0		0	0	0	0	0			0	0
Reduced v/c Ratio	0.53	0.47		1.22	1.02	0.36	0.19	1.16			1.03	0.30

Intersection Summary
Cycle Length: 147

Lane Group	Ø9
Lane Configurations	
Traffic Volume (vph)	
Future Volume (vph)	
Lane Util. Factor	
Frt	
Flt Protected	
Satd. Flow (prot)	
Flt Permitted	
Satd. Flow (perm)	
Satd. Flow (RTOR)	
Adj. Flow (vph)	
Lane Group Flow (vph)	
Turn Type	
Protected Phases	9
Permitted Phases	
Detector Phase	
Switch Phase	
Minimum Initial (s)	5.0
Minimum Split (s)	22.0
Total Split (s)	22.0
Total Split (%)	15%
Maximum Green (s)	20.0
Yellow Time (s)	2.0
All-Red Time (s)	0.0
Lost Time Adjust (s)	
Total Lost Time (s)	
Lead/Lag	
Lead-Lag Optimize?	
Vehicle Extension (s)	3.0
Recall Mode	None
Walk Time (s)	7.0
Flash Dont Walk (s)	13.0
Pedestrian Calls (#/hr)	0
v/c Ratio	
Control Delay	
Queue Delay	
Total Delay	
Queue Length 50th (ft)	
Queue Length 95th (ft)	
Internal Link Dist (ft)	
Turn Bay Length (ft)	
Base Capacity (vph)	
Starvation Cap Reductn	
Spillback Cap Reductn	
Storage Cap Reductn	
Reduced v/c Ratio	

Intersection Summary

Actuated Cycle Length: 147
Offset: 0 (0%), Referenced to phase 2:NBT and 6:SBT, Start of Green, Master Intersection
Natural Cycle: 85
Control Type: Actuated-Coordinated
~ Volume exceeds capacity, queue is theoretically infinite.
Queue shown is maximum after two cycles.
95th percentile volume exceeds capacity, queue may be longer.
Queue shown is maximum after two cycles.

Splits and Phases: 2: Main Street & Pond Street

Movement	NBL	NBT	NBR	SBL	SBT	SBR	SEL	SET	SER	NWL	NWT	NWR
Lane Configurations												
Traffic Volume (vph)	100	594	31	311	839	107	39	234	184	19	87	257
Future Volume (vph)	100	594	31	311	839	107	39	234	184	19	87	257
Ideal Flow (vphpl)	1900	1900	1900	1900	1900	1900	1900	1900	1900	1900	1900	1900
Lane Width	10	12	12	10	12	12	11	11	12	12	11	11
Total Lost time (s)	4.0	4.0		4.0	4.0	4.0	4.0	4.0			4.0	4.0
Lane Util. Factor	1.00	0.95		1.00	0.95	1.00	1.00	1.00			1.00	1.00
Frt	1.00	0.99		1.00	1.00	0.85	1.00	0.93			1.00	0.85
Flt Protected	0.95	1.00		0.95	1.00	1.00	0.95	1.00			0.99	1.00
Satd. Flow (prot)	1685	3583		1668	3505	1615	1694	1708			1821	1561
Flt Permitted	0.95	1.00		0.95	1.00	1.00	0.59	1.00			0.30	1.00
Satd. Flow (perm)	1685	3583		1668	3505	1615	1049	1708			550	1561
Peak-hour factor, PHF	0.89	0.89	0.89	0.96	0.96	0.96	0.95	0.95	0.95	0.89	0.89	0.89
Adj. Flow (vph)	112	667	35	324	874	111	41	246	194	21	98	289
RTOR Reduction (vph)	0	2	0	0	0	34	0	19	0	0	0	144
Lane Group Flow (vph)	112	700	0	324	874	77	41	421	0	0	119	145
Heavy Vehicles (%)	0%	0%	0%	1%	3%	0%	3%	0%	1%	0%	0%	0%
Turn Type	Prot	NA		Prot	NA	Perm	Perm	NA		Perm	NA	pm+ov
Protected Phases	5	2		1	6			4			8	1
Permitted Phases						6	4			8		8
Actuated Green, G (s)	16.5	59.1		40.9	83.5	83.5	29.0	29.0			29.0	69.9
Effective Green, g (s)	18.5	61.1		42.9	85.5	85.5	31.0	31.0			31.0	73.9
Actuated g/C Ratio	0.13	0.42		0.29	0.58	0.58	0.21	0.21			0.21	0.50
Clearance Time (s)	6.0	6.0		6.0	6.0	6.0	6.0	6.0			6.0	6.0
Vehicle Extension (s)	3.0	3.0		3.0	3.0	3.0	3.0	3.0			3.0	3.0
Lane Grp Cap (vph)	212	1489		486	2038	939	221	360			115	827
v/s Ratio Prot	0.07	c0.20		c0.19	0.25			c0.25				0.05
v/s Ratio Perm						0.05	0.04				0.22	0.04
v/c Ratio	0.53	0.47		0.67	0.43	0.08	0.19	1.17			1.03	0.18
Uniform Delay, d1	60.2	31.2		45.8	17.1	13.5	47.6	58.0			58.0	19.9
Progression Factor	1.00	1.00		1.00	1.00	1.00	1.00	1.00			1.00	1.00
Incremental Delay, d2	2.4	1.1		3.4	0.7	0.2	0.4	102.1			93.6	0.1
Delay (s)	62.5	32.3		49.2	17.8	13.7	48.0	160.1			151.6	20.0
Level of Service	E	C		D	B	B	D	F			F	C
Approach Delay (s)		36.4			25.2			150.5			58.4	
Approach LOS		D			C			F			E	

Intersection Summary			
HCM 2000 Control Delay	52.8	HCM 2000 Level of Service	D
HCM 2000 Volume to Capacity ratio	0.70		
Actuated Cycle Length (s)	147.0	Sum of lost time (s)	14.0
Intersection Capacity Utilization	68.2%	ICU Level of Service	C
Analysis Period (min)	15		

c Critical Lane Group

Lane Group	NBL	NBT	NBR	SBL	SBT	SBR	SEL	SET	SER	NWL	NWT	NWR
Lane Configurations												
Traffic Volume (vph)	149	691	41	222	750	91	51	140	143	23	105	238
Future Volume (vph)	149	691	41	222	750	91	51	140	143	23	105	238
Lane Util. Factor	1.00	0.95	0.95	1.00	0.95	1.00	1.00	1.00	1.00	1.00	1.00	1.00
Frt		0.992				0.850		0.924				0.850
Flt Protected	0.950			0.950			0.950				0.991	
Satd. Flow (prot)	1685	3548	0	1668	3610	1615	1745	1697	0	0	1820	1561
Flt Permitted	0.950			0.950			0.572				0.507	
Satd. Flow (perm)	1685	3548	0	1668	3610	1615	1051	1697	0	0	931	1561
Satd. Flow (RTOR)		6				103		40				256
Adj. Flow (vph)	166	768	46	236	798	97	63	173	177	25	113	256
Lane Group Flow (vph)	166	814	0	236	798	97	63	350	0	0	138	256
Turn Type	Prot	NA		Prot	NA	Perm	Perm	NA		Perm	NA	pm+ov
Protected Phases	5	2		1	6			4			8	1
Permitted Phases						6	4			8		8
Detector Phase	5	2		1	6	6	4	4		8	8	1
Switch Phase												
Minimum Initial (s)	6.0	10.0		6.0	10.0	10.0	8.0	8.0		8.0	8.0	6.0
Minimum Split (s)	12.0	24.0		12.0	24.0	24.0	24.0	24.0		24.0	24.0	12.0
Total Split (s)	20.0	45.0		20.0	45.0	45.0	30.0	30.0		30.0	30.0	20.0
Total Split (%)	17.1%	38.5%		17.1%	38.5%	38.5%	25.6%	25.6%		25.6%	25.6%	17.1%
Maximum Green (s)	14.0	39.0		14.0	39.0	39.0	24.0	24.0		24.0	24.0	14.0
Yellow Time (s)	4.0	4.0		4.0	4.0	4.0	4.0	4.0		4.0	4.0	4.0
All-Red Time (s)	2.0	2.0		2.0	2.0	2.0	2.0	2.0		2.0	2.0	2.0
Lost Time Adjust (s)	-2.0	-2.0		-2.0	-2.0	-2.0	-2.0	-2.0			-2.0	-2.0
Total Lost Time (s)	4.0	4.0		4.0	4.0	4.0	4.0	4.0			4.0	4.0
Lead/Lag	Lead	Lag		Lead	Lag	Lag						Lead
Lead-Lag Optimize?	Yes	Yes		Yes	Yes	Yes						Yes
Vehicle Extension (s)	3.0	3.0		3.0	3.0	3.0	3.0	3.0		3.0	3.0	3.0
Recall Mode	None	C-Max		None	C-Max	C-Max	None	None		None	None	None
Walk Time (s)		7.0			7.0	7.0						
Flash Dont Walk (s)		11.0			7.0	7.0						
Pedestrian Calls (#/hr)		0			0	0						
v/c Ratio	0.61	0.51		0.60	0.42	0.11	0.28	0.89			0.69	0.29
Control Delay	54.5	25.0		46.4	19.0	3.3	41.8	63.9			61.5	2.7
Queue Delay	0.0	0.0		11.8	4.5	0.0	0.0	0.0			0.0	0.0
Total Delay	54.5	25.0		58.2	23.5	3.3	41.8	63.9			61.5	2.7
Queue Length 50th (ft)	118	226		160	191	0	40	229			96	0
Queue Length 95th (ft)	181	302		237	266	27	72	#317			#185	40
Internal Link Dist (ft)		355			212			463			459	
Turn Bay Length (ft)	100			100		60	340					330
Base Capacity (vph)	282	1585		395	1880	890	233	408			206	890
Starvation Cap Reductn	0	0		132	989	0	0	0			0	0
Spillback Cap Reductn	0	0		0	0	0	0	0			0	0
Storage Cap Reductn	0	0		0	0	0	0	0			0	0
Reduced v/c Ratio	0.59	0.51		0.90	0.90	0.11	0.27	0.86			0.67	0.29

Intersection Summary
Cycle Length: 117

Lane Group	Ø9
Lane Configurations	
Traffic Volume (vph)	
Future Volume (vph)	
Lane Util. Factor	
Frt	
Flt Protected	
Satd. Flow (prot)	
Flt Permitted	
Satd. Flow (perm)	
Satd. Flow (RTOR)	
Adj. Flow (vph)	
Lane Group Flow (vph)	
Turn Type	
Protected Phases	9
Permitted Phases	
Detector Phase	
Switch Phase	
Minimum Initial (s)	5.0
Minimum Split (s)	22.0
Total Split (s)	22.0
Total Split (%)	19%
Maximum Green (s)	20.0
Yellow Time (s)	2.0
All-Red Time (s)	0.0
Lost Time Adjust (s)	
Total Lost Time (s)	
Lead/Lag	
Lead-Lag Optimize?	
Vehicle Extension (s)	3.0
Recall Mode	None
Walk Time (s)	7.0
Flash Dont Walk (s)	13.0
Pedestrian Calls (#/hr)	0
v/c Ratio	
Control Delay	
Queue Delay	
Total Delay	
Queue Length 50th (ft)	
Queue Length 95th (ft)	
Internal Link Dist (ft)	
Turn Bay Length (ft)	
Base Capacity (vph)	
Starvation Cap Reductn	
Spillback Cap Reductn	
Storage Cap Reductn	
Reduced v/c Ratio	

Intersection Summary

Actuated Cycle Length: 117
Offset: 0 (0%), Referenced to phase 2:NBT and 6:SBT, Start of Green, Master Intersection
Natural Cycle: 85
Control Type: Actuated-Coordinated
95th percentile volume exceeds capacity, queue may be longer.
Queue shown is maximum after two cycles.

Splits and Phases: 2: Main Street & Pond Street

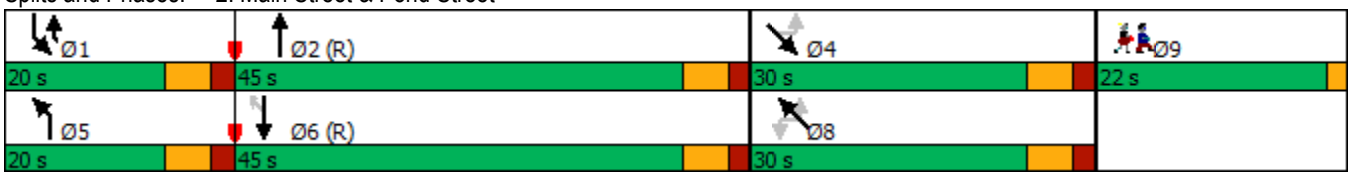

Movement	NBL	NBT	NBR	SBL	SBT	SBR	SEL	SET	SER	NWL	NWT	NWR
Lane Configurations												
Traffic Volume (vph)	149	691	41	222	750	91	51	140	143	23	105	238
Future Volume (vph)	149	691	41	222	750	91	51	140	143	23	105	238
Ideal Flow (vphpl)	1900	1900	1900	1900	1900	1900	1900	1900	1900	1900	1900	1900
Lane Width	10	12	12	10	12	12	11	11	12	12	11	11
Total Lost time (s)	4.0	4.0		4.0	4.0	4.0	4.0	4.0			4.0	4.0
Lane Util. Factor	1.00	0.95		1.00	0.95	1.00	1.00	1.00			1.00	1.00
Frt	1.00	0.99		1.00	1.00	0.85	1.00	0.92			1.00	0.85
Flt Protected	0.95	1.00		0.95	1.00	1.00	0.95	1.00			0.99	1.00
Satd. Flow (prot)	1685	3546		1668	3610	1615	1745	1697			1820	1561
Flt Permitted	0.95	1.00		0.95	1.00	1.00	0.57	1.00			0.51	1.00
Satd. Flow (perm)	1685	3546		1668	3610	1615	1051	1697			932	1561
Peak-hour factor, PHF	0.90	0.90	0.90	0.94	0.94	0.94	0.81	0.81	0.81	0.93	0.93	0.93
Adj. Flow (vph)	166	768	46	236	798	97	63	173	177	25	113	256
RTOR Reduction (vph)	0	3	0	0	0	47	0	31	0	0	0	140
Lane Group Flow (vph)	166	811	0	236	798	50	63	319	0	0	138	116
Heavy Vehicles (%)	0%	1%	0%	1%	0%	0%	0%	0%	0%	0%	0%	0%
Turn Type	Prot	NA		Prot	NA	Perm	Perm	NA		Perm	NA	pm+ov
Protected Phases	5	2		1	6			4			8	1
Permitted Phases						6	4			8		8
Actuated Green, G (s)	17.0	50.2		25.7	58.9	58.9	23.1	23.1			23.1	48.8
Effective Green, g (s)	19.0	52.2		27.7	60.9	60.9	25.1	25.1			25.1	52.8
Actuated g/C Ratio	0.16	0.45		0.24	0.52	0.52	0.21	0.21			0.21	0.45
Clearance Time (s)	6.0	6.0		6.0	6.0	6.0	6.0	6.0			6.0	6.0
Vehicle Extension (s)	3.0	3.0		3.0	3.0	3.0	3.0	3.0			3.0	3.0
Lane Grp Cap (vph)	273	1582		394	1879	840	225	364			199	757
v/s Ratio Prot	0.10	c0.23		c0.14	0.22			c0.19				0.04
v/s Ratio Perm						0.03	0.06				0.15	0.04
v/c Ratio	0.61	0.51		0.60	0.42	0.06	0.28	0.88			0.69	0.15
Uniform Delay, d1	45.5	23.3		39.7	17.3	13.9	38.4	44.4			42.4	18.9
Progression Factor	1.00	1.00		1.00	1.00	1.00	1.00	1.00			1.00	1.00
Incremental Delay, d2	3.8	1.2		2.5	0.7	0.1	0.7	20.2			10.0	0.1
Delay (s)	49.3	24.5		42.2	18.0	14.0	39.1	64.6			52.4	19.0
Level of Service	D	C		D	B	B	D	E			D	B
Approach Delay (s)		28.7			22.7			60.7			30.7	
Approach LOS		C			C			E			C	

Intersection Summary			
HCM 2000 Control Delay	31.2	HCM 2000 Level of Service	C
HCM 2000 Volume to Capacity ratio	0.63		
Actuated Cycle Length (s)	117.0	Sum of lost time (s)	14.0
Intersection Capacity Utilization	68.0%	ICU Level of Service	C
Analysis Period (min)	15		

c Critical Lane Group

Lane Group	NBL	NBT	NBR	SBL	SBT	SBR	SEL	SET	SER	NWL	NWT	NWR
Lane Configurations												
Traffic Volume (vph)	147	998	12	169	728	139	170	102	107	6	239	450
Future Volume (vph)	147	998	12	169	728	139	170	102	107	6	239	450
Lane Util. Factor	1.00	0.95	0.95	1.00	0.95	1.00	1.00	1.00	1.00	1.00	1.00	1.00
Frt		0.998				0.850		0.923				0.850
Flt Protected	0.950			0.950			0.950				0.999	
Satd. Flow (prot)	1685	3533	0	1668	3539	1599	1728	1678	0	0	1835	1561
Flt Permitted	0.950			0.950			0.278				0.990	
Satd. Flow (perm)	1685	3533	0	1668	3539	1599	506	1678	0	0	1818	1561
Satd. Flow (RTOR)		1				82		33				314
Adj. Flow (vph)	153	1040	13	190	818	156	189	113	119	7	263	495
Lane Group Flow (vph)	153	1053	0	190	818	156	189	232	0	0	270	495
Turn Type	Prot	NA		Prot	NA	Perm	Perm	NA		Perm	NA	pm+ov
Protected Phases	5	2		1	6			4			8	1
Permitted Phases						6	4			8		8
Detector Phase	5	2		1	6	6	4	4		8	8	1
Switch Phase												
Minimum Initial (s)	6.0	10.0		6.0	10.0	10.0	8.0	8.0		8.0	8.0	6.0
Minimum Split (s)	12.0	24.0		12.0	24.0	24.0	24.0	24.0		24.0	24.0	12.0
Total Split (s)	15.0	60.0		30.0	75.0	75.0	35.0	35.0		35.0	35.0	30.0
Total Split (%)	10.2%	40.8%		20.4%	51.0%	51.0%	23.8%	23.8%		23.8%	23.8%	20.4%
Maximum Green (s)	9.0	54.0		24.0	69.0	69.0	29.0	29.0		29.0	29.0	24.0
Yellow Time (s)	4.0	4.0		4.0	4.0	4.0	4.0	4.0		4.0	4.0	4.0
All-Red Time (s)	2.0	2.0		2.0	2.0	2.0	2.0	2.0		2.0	2.0	2.0
Lost Time Adjust (s)	-2.0	-2.0		-2.0	-2.0	-2.0	-2.0	-2.0			-2.0	-2.0
Total Lost Time (s)	4.0	4.0		4.0	4.0	4.0	4.0	4.0			4.0	4.0
Lead/Lag	Lead	Lag		Lead	Lag	Lag						Lead
Lead-Lag Optimize?	Yes	Yes		Yes	Yes	Yes						Yes
Vehicle Extension (s)	3.0	3.0		3.0	3.0	3.0	3.0	3.0		3.0	3.0	3.0
Recall Mode	None	C-Max		None	C-Max	C-Max	None	None		None	None	None
Walk Time (s)		7.0			7.0	7.0						
Flash Dont Walk (s)		11.0			7.0	7.0						
Pedestrian Calls (#/hr)		0			0	0						
v/c Ratio	0.50	0.55		0.69	0.44	0.18	1.78	0.61			0.70	0.61
Control Delay	61.0	24.0		70.5	22.3	8.8	420.5	52.6			64.9	14.4
Queue Delay	0.0	0.0		9.2	51.7	1.8	0.0	0.0			0.0	0.0
Total Delay	61.0	24.0		79.7	74.0	10.7	420.5	52.6			64.9	14.4
Queue Length 50th (ft)	135	333		174	242	34	~270	175			242	132
Queue Length 95th (ft)	210	449		243	296	73	#432	269			348	226
Internal Link Dist (ft)		355			212			463			459	
Turn Bay Length (ft)	100			100		60	340					330
Base Capacity (vph)	305	1918		313	1861	880	106	379			383	844
Starvation Cap Reductn	0	0		90	1122	581	0	0			0	0
Spillback Cap Reductn	0	0		0	0	0	0	0			0	0
Storage Cap Reductn	0	0		0	0	0	0	0			0	0
Reduced v/c Ratio	0.50	0.55		0.85	1.11	0.52	1.78	0.61			0.70	0.59

Intersection Summary
Cycle Length: 147

Lane Group	Ø9
Lane Configurations	
Traffic Volume (vph)	
Future Volume (vph)	
Lane Util. Factor	
Frt	
Flt Protected	
Satd. Flow (prot)	
Flt Permitted	
Satd. Flow (perm)	
Satd. Flow (RTOR)	
Adj. Flow (vph)	
Lane Group Flow (vph)	
Turn Type	
Protected Phases	9
Permitted Phases	
Detector Phase	
Switch Phase	
Minimum Initial (s)	5.0
Minimum Split (s)	22.0
Total Split (s)	22.0
Total Split (%)	15%
Maximum Green (s)	20.0
Yellow Time (s)	2.0
All-Red Time (s)	0.0
Lost Time Adjust (s)	
Total Lost Time (s)	
Lead/Lag	
Lead-Lag Optimize?	
Vehicle Extension (s)	3.0
Recall Mode	None
Walk Time (s)	7.0
Flash Dont Walk (s)	13.0
Pedestrian Calls (#/hr)	0
v/c Ratio	
Control Delay	
Queue Delay	
Total Delay	
Queue Length 50th (ft)	
Queue Length 95th (ft)	
Internal Link Dist (ft)	
Turn Bay Length (ft)	
Base Capacity (vph)	
Starvation Cap Reductn	
Spillback Cap Reductn	
Storage Cap Reductn	
Reduced v/c Ratio	

Intersection Summary

Actuated Cycle Length: 147
Offset: 0 (0%), Referenced to phase 2:NBT and 6:SBT, Start of Green, Master Intersection
Natural Cycle: 105
Control Type: Actuated-Coordinated
~ Volume exceeds capacity, queue is theoretically infinite.
Queue shown is maximum after two cycles.
95th percentile volume exceeds capacity, queue may be longer.
Queue shown is maximum after two cycles.

Splits and Phases: 2: Main Street & Pond Street

Movement	NBL	NBT	NBR	SBL	SBT	SBR	SEL	SET	SER	NWL	NWT	NWR
Lane Configurations												
Traffic Volume (vph)	147	998	12	169	728	139	170	102	107	6	239	450
Future Volume (vph)	147	998	12	169	728	139	170	102	107	6	239	450
Ideal Flow (vphpl)	1900	1900	1900	1900	1900	1900	1900	1900	1900	1900	1900	1900
Lane Width	10	12	12	10	12	12	11	11	12	12	11	11
Total Lost time (s)	4.0	4.0		4.0	4.0	4.0	4.0	4.0			4.0	4.0
Lane Util. Factor	1.00	0.95		1.00	0.95	1.00	1.00	1.00			1.00	1.00
Frt	1.00	1.00		1.00	1.00	0.85	1.00	0.92			1.00	0.85
Flt Protected	0.95	1.00		0.95	1.00	1.00	0.95	1.00			1.00	1.00
Satd. Flow (prot)	1685	3534		1668	3539	1599	1728	1678			1834	1561
Flt Permitted	0.95	1.00		0.95	1.00	1.00	0.28	1.00			0.99	1.00
Satd. Flow (perm)	1685	3534		1668	3539	1599	505	1678			1819	1561
Peak-hour factor, PHF	0.96	0.96	0.96	0.89	0.89	0.89	0.90	0.90	0.90	0.91	0.91	0.91
Adj. Flow (vph)	153	1040	12	190	818	156	189	113	119	7	263	495
RTOR Reduction (vph)	0	0	0	0	0	39	0	26	0	0	0	196
Lane Group Flow (vph)	153	1053	0	190	818	117	189	206	0	0	270	299
Heavy Vehicles (%)	0%	2%	0%	1%	2%	1%	1%	0%	2%	0%	0%	0%
Turn Type	Prot	NA		Prot	NA	Perm	Perm	NA		Perm	NA	pm+ov
Protected Phases	5	2		1	6			4			8	1
Permitted Phases						6	4			8		8
Actuated Green, G (s)	24.7	77.8		22.2	75.3	75.3	29.0	29.0			29.0	51.2
Effective Green, g (s)	26.7	79.8		24.2	77.3	77.3	31.0	31.0			31.0	55.2
Actuated g/C Ratio	0.18	0.54		0.16	0.53	0.53	0.21	0.21			0.21	0.38
Clearance Time (s)	6.0	6.0		6.0	6.0	6.0	6.0	6.0			6.0	6.0
Vehicle Extension (s)	3.0	3.0		3.0	3.0	3.0	3.0	3.0			3.0	3.0
Lane Grp Cap (vph)	306	1918		274	1860	840	106	353			383	628
v/s Ratio Prot	0.09	c0.30		c0.11	0.23			0.12				0.08
v/s Ratio Perm						0.07	c0.37				0.15	0.11
v/c Ratio	0.50	0.55		0.69	0.44	0.14	1.78	0.58			0.70	0.48
Uniform Delay, d1	54.1	21.9		57.9	21.5	17.8	58.0	52.2			53.8	34.9
Progression Factor	1.00	1.00		1.00	1.00	1.00	1.00	1.00			1.00	1.00
Incremental Delay, d2	1.3	1.1		7.4	0.8	0.3	387.5	2.5			5.8	0.6
Delay (s)	55.4	23.0		65.3	22.3	18.2	445.5	54.6			59.6	35.5
Level of Service	E	C		E	C	B	F	D			E	D
Approach Delay (s)		27.1			28.7			230.1			44.0	
Approach LOS		C			C			F			D	

Intersection Summary			
HCM 2000 Control Delay	55.3	HCM 2000 Level of Service	E
HCM 2000 Volume to Capacity ratio	0.87		
Actuated Cycle Length (s)	147.0	Sum of lost time (s)	14.0
Intersection Capacity Utilization	77.7%	ICU Level of Service	D
Analysis Period (min)	15		

c Critical Lane Group

Lane Group	NBL	NBT	NBR	SBL	SBT	SBR	SEL	SET	SER	NWL	NWT	NWR
Lane Configurations												
Traffic Volume (vph)	108	778	34	389	1137	186	93	253	199	21	94	306
Future Volume (vph)	108	778	34	389	1137	186	93	253	199	21	94	306
Lane Util. Factor	1.00	0.95	0.95	1.00	0.95	1.00	1.00	1.00	1.00	1.00	1.00	1.00
Frt		0.994				0.850		0.934				0.850
Flt Protected	0.950			0.950			0.950				0.991	
Satd. Flow (prot)	1685	3588	0	1668	3505	1615	1694	1708	0	0	1820	1561
Flt Permitted	0.950			0.950			0.564				0.271	
Satd. Flow (perm)	1685	3588	0	1668	3505	1615	1006	1708	0	0	498	1561
Satd. Flow (RTOR)		3				82		24				331
Adj. Flow (vph)	121	874	38	405	1184	194	98	266	209	24	106	344
Lane Group Flow (vph)	121	912	0	405	1184	194	98	475	0	0	130	344
Turn Type	Prot	NA		Prot	NA	Perm	Perm	NA		Perm	NA	pm+ov
Protected Phases	5	2		1	6			4			8	1
Permitted Phases						6	4			8		8
Detector Phase	5	2		1	6	6	4	4		8	8	1
Switch Phase												
Minimum Initial (s)	6.0	10.0		6.0	10.0	10.0	8.0	8.0		8.0	8.0	6.0
Minimum Split (s)	12.0	24.0		12.0	24.0	24.0	24.0	24.0		24.0	24.0	12.0
Total Split (s)	15.0	60.0		30.0	75.0	75.0	35.0	35.0		35.0	35.0	30.0
Total Split (%)	10.2%	40.8%		20.4%	51.0%	51.0%	23.8%	23.8%		23.8%	23.8%	20.4%
Maximum Green (s)	9.0	54.0		24.0	69.0	69.0	29.0	29.0		29.0	29.0	24.0
Yellow Time (s)	4.0	4.0		4.0	4.0	4.0	4.0	4.0		4.0	4.0	4.0
All-Red Time (s)	2.0	2.0		2.0	2.0	2.0	2.0	2.0		2.0	2.0	2.0
Lost Time Adjust (s)	-2.0	-2.0		-2.0	-2.0	-2.0	-2.0	-2.0			-2.0	-2.0
Total Lost Time (s)	4.0	4.0		4.0	4.0	4.0	4.0	4.0			4.0	4.0
Lead/Lag	Lead	Lag		Lead	Lag	Lag						Lead
Lead-Lag Optimize?	Yes	Yes		Yes	Yes	Yes						Yes
Vehicle Extension (s)	3.0	3.0		3.0	3.0	3.0	3.0	3.0		3.0	3.0	3.0
Recall Mode	None	C-Max		None	C-Max	C-Max	None	None		None	None	None
Walk Time (s)		7.0			7.0	7.0						
Flash Dont Walk (s)		11.0			7.0	7.0						
Pedestrian Calls (#/hr)		0			0	0						
v/c Ratio	0.53	0.67		0.74	0.59	0.20	0.46	1.25			1.24	0.34
Control Delay	67.1	40.5		53.8	22.4	9.5	59.0	178.1			211.8	2.7
Queue Delay	0.0	0.0		57.5	50.0	1.9	0.0	0.0			0.0	0.0
Total Delay	67.1	40.5		111.3	72.3	11.4	59.0	178.1			211.8	2.7
Queue Length 50th (ft)	109	378		346	374	48	83	~550			~154	5
Queue Length 95th (ft)	173	447		477	467	94	147	#776			#289	48
Internal Link Dist (ft)		355			212			463			459	
Turn Bay Length (ft)	100			100		60	340					330
Base Capacity (vph)	230	1368		544	1999	956	212	379			105	1025
Starvation Cap Reductn	0	0		255	1013	613	0	0			0	0
Spillback Cap Reductn	0	0		0	0	0	0	0			0	0
Storage Cap Reductn	0	0		0	0	0	0	0			0	0
Reduced v/c Ratio	0.53	0.67		1.40	1.20	0.57	0.46	1.25			1.24	0.34

Intersection Summary
Cycle Length: 147

Lane Group	Ø9
Lane Configurations	
Traffic Volume (vph)	
Future Volume (vph)	
Lane Util. Factor	
Frt	
Flt Protected	
Satd. Flow (prot)	
Flt Permitted	
Satd. Flow (perm)	
Satd. Flow (RTOR)	
Adj. Flow (vph)	
Lane Group Flow (vph)	
Turn Type	
Protected Phases	9
Permitted Phases	
Detector Phase	
Switch Phase	
Minimum Initial (s)	5.0
Minimum Split (s)	22.0
Total Split (s)	22.0
Total Split (%)	15%
Maximum Green (s)	20.0
Yellow Time (s)	2.0
All-Red Time (s)	0.0
Lost Time Adjust (s)	
Total Lost Time (s)	
Lead/Lag	
Lead-Lag Optimize?	
Vehicle Extension (s)	3.0
Recall Mode	None
Walk Time (s)	7.0
Flash Dont Walk (s)	13.0
Pedestrian Calls (#/hr)	0
v/c Ratio	
Control Delay	
Queue Delay	
Total Delay	
Queue Length 50th (ft)	
Queue Length 95th (ft)	
Internal Link Dist (ft)	
Turn Bay Length (ft)	
Base Capacity (vph)	
Starvation Cap Reductn	
Spillback Cap Reductn	
Storage Cap Reductn	
Reduced v/c Ratio	

Intersection Summary

Actuated Cycle Length: 147
Offset: 0 (0%), Referenced to phase 2:NBT and 6:SBT, Start of Green, Master Intersection
Natural Cycle: 135
Control Type: Actuated-Coordinated
~ Volume exceeds capacity, queue is theoretically infinite.
Queue shown is maximum after two cycles.
95th percentile volume exceeds capacity, queue may be longer.
Queue shown is maximum after two cycles.

Splits and Phases: 2: Main Street & Pond Street

Movement	NBL	NBT	NBR	SBL	SBT	SBR	SEL	SET	SER	NWL	NWT	NWR
Lane Configurations												
Traffic Volume (vph)	108	778	34	389	1137	186	93	253	199	21	94	306
Future Volume (vph)	108	778	34	389	1137	186	93	253	199	21	94	306
Ideal Flow (vphpl)	1900	1900	1900	1900	1900	1900	1900	1900	1900	1900	1900	1900
Lane Width	10	12	12	10	12	12	11	11	12	12	11	11
Total Lost time (s)	4.0	4.0		4.0	4.0	4.0	4.0	4.0			4.0	4.0
Lane Util. Factor	1.00	0.95		1.00	0.95	1.00	1.00	1.00			1.00	1.00
Frt	1.00	0.99		1.00	1.00	0.85	1.00	0.93			1.00	0.85
Flt Protected	0.95	1.00		0.95	1.00	1.00	0.95	1.00			0.99	1.00
Satd. Flow (prot)	1685	3587		1668	3505	1615	1694	1708			1820	1561
Flt Permitted	0.95	1.00		0.95	1.00	1.00	0.56	1.00			0.27	1.00
Satd. Flow (perm)	1685	3587		1668	3505	1615	1006	1708			498	1561
Peak-hour factor, PHF	0.89	0.89	0.89	0.96	0.96	0.96	0.95	0.95	0.95	0.89	0.89	0.89
Adj. Flow (vph)	121	874	38	405	1184	194	98	266	209	24	106	344
RTOR Reduction (vph)	0	2	0	0	0	35	0	19	0	0	0	153
Lane Group Flow (vph)	121	910	0	405	1184	159	98	456	0	0	130	191
Heavy Vehicles (%)	0%	0%	0%	1%	3%	0%	3%	0%	1%	0%	0%	0%
Turn Type	Prot	NA		Prot	NA	Perm	Perm	NA		Perm	NA	pm+ov
Protected Phases	5	2		1	6			4			8	1
Permitted Phases						6	4			8		8
Actuated Green, G (s)	18.1	54.0		46.0	81.9	81.9	29.0	29.0			29.0	75.0
Effective Green, g (s)	20.1	56.0		48.0	83.9	83.9	31.0	31.0			31.0	79.0
Actuated g/C Ratio	0.14	0.38		0.33	0.57	0.57	0.21	0.21			0.21	0.54
Clearance Time (s)	6.0	6.0		6.0	6.0	6.0	6.0	6.0			6.0	6.0
Vehicle Extension (s)	3.0	3.0		3.0	3.0	3.0	3.0	3.0			3.0	3.0
Lane Grp Cap (vph)	230	1366		544	2000	921	212	360			105	881
v/s Ratio Prot	0.07	c0.25		c0.24	0.34			c0.27				0.07
v/s Ratio Perm						0.10	0.10				0.26	0.05
v/c Ratio	0.53	0.67		0.74	0.59	0.17	0.46	1.27			1.24	0.22
Uniform Delay, d1	59.0	37.7		44.0	20.5	15.0	50.7	58.0			58.0	17.8
Progression Factor	1.00	1.00		1.00	1.00	1.00	1.00	1.00			1.00	1.00
Incremental Delay, d2	2.2	2.6		5.5	1.3	0.4	1.6	140.4			165.0	0.1
Delay (s)	61.2	40.3		49.5	21.8	15.4	52.3	198.4			223.0	17.9
Level of Service	E	D		D	C	B	D	F			F	B
Approach Delay (s)		42.8			27.4			173.4			74.2	
Approach LOS		D			C			F			E	

Intersection Summary			
HCM 2000 Control Delay	58.9	HCM 2000 Level of Service	E
HCM 2000 Volume to Capacity ratio	0.84		
Actuated Cycle Length (s)	147.0	Sum of lost time (s)	14.0
Intersection Capacity Utilization	79.6%	ICU Level of Service	D
Analysis Period (min)	15		

c Critical Lane Group

Lane Group	NBL	NBT	NBR	SBL	SBT	SBR	SEL	SET	SER	NWL	NWT	NWR
Lane Configurations												
Traffic Volume (vph)	161	885	44	295	1044	169	106	152	155	25	113	284
Future Volume (vph)	161	885	44	295	1044	169	106	152	155	25	113	284
Lane Util. Factor	1.00	0.95	0.95	1.00	0.95	1.00	1.00	1.00	1.00	1.00	1.00	1.00
Frt		0.993				0.850		0.924				0.850
Flt Protected	0.950			0.950			0.950				0.991	
Satd. Flow (prot)	1685	3551	0	1668	3610	1615	1745	1697	0	0	1820	1561
Flt Permitted	0.950			0.950			0.554				0.441	
Satd. Flow (perm)	1685	3551	0	1668	3610	1615	1018	1697	0	0	810	1561
Satd. Flow (RTOR)		5				103		40				305
Adj. Flow (vph)	179	983	49	314	1111	180	131	188	191	27	122	305
Lane Group Flow (vph)	179	1032	0	314	1111	180	131	379	0	0	149	305
Turn Type	Prot	NA		Prot	NA	Perm	Perm	NA		Perm	NA	pm+ov
Protected Phases	5	2		1	6			4			8	1
Permitted Phases						6	4			8		8
Detector Phase	5	2		1	6	6	4	4		8	8	1
Switch Phase												
Minimum Initial (s)	6.0	10.0		6.0	10.0	10.0	8.0	8.0		8.0	8.0	6.0
Minimum Split (s)	12.0	24.0		12.0	24.0	24.0	24.0	24.0		24.0	24.0	12.0
Total Split (s)	20.0	45.0		20.0	45.0	45.0	30.0	30.0		30.0	30.0	20.0
Total Split (%)	17.1%	38.5%		17.1%	38.5%	38.5%	25.6%	25.6%		25.6%	25.6%	17.1%
Maximum Green (s)	14.0	39.0		14.0	39.0	39.0	24.0	24.0		24.0	24.0	14.0
Yellow Time (s)	4.0	4.0		4.0	4.0	4.0	4.0	4.0		4.0	4.0	4.0
All-Red Time (s)	2.0	2.0		2.0	2.0	2.0	2.0	2.0		2.0	2.0	2.0
Lost Time Adjust (s)	-2.0	-2.0		-2.0	-2.0	-2.0	-2.0	-2.0			-2.0	-2.0
Total Lost Time (s)	4.0	4.0		4.0	4.0	4.0	4.0	4.0			4.0	4.0
Lead/Lag	Lead	Lag		Lead	Lag	Lag						Lead
Lead-Lag Optimize?	Yes	Yes		Yes	Yes	Yes						Yes
Vehicle Extension (s)	3.0	3.0		3.0	3.0	3.0	3.0	3.0		3.0	3.0	3.0
Recall Mode	None	C-Max		None	C-Max	C-Max	None	None		None	None	None
Walk Time (s)		7.0			7.0	7.0						
Flash Dont Walk (s)		11.0			7.0	7.0						
Pedestrian Calls (#/hr)		0			0	0						
v/c Ratio	0.62	0.82		0.58	0.61	0.21	0.58	0.94			0.83	0.30
Control Delay	53.9	40.5		38.5	23.2	8.4	52.5	71.6			79.7	2.0
Queue Delay	0.0	0.0		27.2	50.0	1.0	0.0	0.0			0.0	0.0
Total Delay	53.9	40.5		65.8	73.2	9.3	52.5	71.6			79.7	2.0
Queue Length 50th (ft)	126	364		199	306	29	89	256			108	0
Queue Length 95th (ft)	192	457		292	414	76	138	#364			#226	36
Internal Link Dist (ft)		355			212			463			459	
Turn Bay Length (ft)	100			100		60	340					330
Base Capacity (vph)	294	1262		537	1824	867	226	408			180	1029
Starvation Cap Reductn	0	0		224	849	470	0	0			0	0
Spillback Cap Reductn	0	0		0	0	0	0	0			0	0
Storage Cap Reductn	0	0		0	0	0	0	0			0	0
Reduced v/c Ratio	0.61	0.82		1.00	1.14	0.45	0.58	0.93			0.83	0.30

Intersection Summary
Cycle Length: 117

Lane Group	Ø9
Lane Configurations	
Traffic Volume (vph)	
Future Volume (vph)	
Lane Util. Factor	
Frt	
Flt Protected	
Satd. Flow (prot)	
Flt Permitted	
Satd. Flow (perm)	
Satd. Flow (RTOR)	
Adj. Flow (vph)	
Lane Group Flow (vph)	
Turn Type	
Protected Phases	9
Permitted Phases	
Detector Phase	
Switch Phase	
Minimum Initial (s)	5.0
Minimum Split (s)	22.0
Total Split (s)	22.0
Total Split (%)	19%
Maximum Green (s)	20.0
Yellow Time (s)	2.0
All-Red Time (s)	0.0
Lost Time Adjust (s)	
Total Lost Time (s)	
Lead/Lag	
Lead-Lag Optimize?	
Vehicle Extension (s)	3.0
Recall Mode	None
Walk Time (s)	7.0
Flash Dont Walk (s)	13.0
Pedestrian Calls (#/hr)	0
v/c Ratio	
Control Delay	
Queue Delay	
Total Delay	
Queue Length 50th (ft)	
Queue Length 95th (ft)	
Internal Link Dist (ft)	
Turn Bay Length (ft)	
Base Capacity (vph)	
Starvation Cap Reductn	
Spillback Cap Reductn	
Storage Cap Reductn	
Reduced v/c Ratio	

Intersection Summary

Actuated Cycle Length: 117
Offset: 0 (0%), Referenced to phase 2:NBT and 6:SBT, Start of Green, Master Intersection
Natural Cycle: 105
Control Type: Actuated-Coordinated
95th percentile volume exceeds capacity, queue may be longer.
Queue shown is maximum after two cycles.

Splits and Phases: 2: Main Street & Pond Street

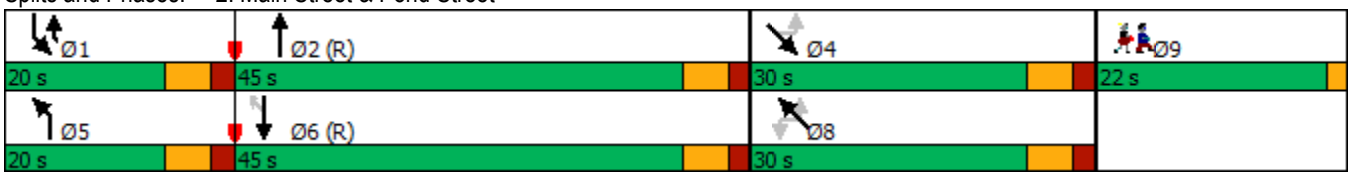

Movement	NBL	NBT	NBR	SBL	SBT	SBR	SEL	SET	SER	NWL	NWT	NWR
Lane Configurations												
Traffic Volume (vph)	161	885	44	295	1044	169	106	152	155	25	113	284
Future Volume (vph)	161	885	44	295	1044	169	106	152	155	25	113	284
Ideal Flow (vphpl)	1900	1900	1900	1900	1900	1900	1900	1900	1900	1900	1900	1900
Lane Width	10	12	12	10	12	12	11	11	12	12	11	11
Total Lost time (s)	4.0	4.0		4.0	4.0	4.0	4.0	4.0			4.0	4.0
Lane Util. Factor	1.00	0.95		1.00	0.95	1.00	1.00	1.00			1.00	1.00
Frt	1.00	0.99		1.00	1.00	0.85	1.00	0.92			1.00	0.85
Flt Protected	0.95	1.00		0.95	1.00	1.00	0.95	1.00			0.99	1.00
Satd. Flow (prot)	1685	3550		1668	3610	1615	1745	1698			1820	1561
Flt Permitted	0.95	1.00		0.95	1.00	1.00	0.55	1.00			0.44	1.00
Satd. Flow (perm)	1685	3550		1668	3610	1615	1017	1698			811	1561
Peak-hour factor, PHF	0.90	0.90	0.90	0.94	0.94	0.94	0.81	0.81	0.81	0.93	0.93	0.93
Adj. Flow (vph)	179	983	49	314	1111	180	131	188	191	27	122	305
RTOR Reduction (vph)	0	3	0	0	0	51	0	31	0	0	0	139
Lane Group Flow (vph)	179	1029	0	314	1111	129	131	348	0	0	149	166
Heavy Vehicles (%)	0%	1%	0%	1%	0%	0%	0%	0%	0%	0%	0%	0%
Turn Type	Prot	NA		Prot	NA	Perm	Perm	NA		Perm	NA	pm+ov
Protected Phases	5	2		1	6			4			8	1
Permitted Phases						6	4			8		8
Actuated Green, G (s)	18.1	39.5		35.7	57.1	57.1	23.8	23.8			23.8	59.5
Effective Green, g (s)	20.1	41.5		37.7	59.1	59.1	25.8	25.8			25.8	63.5
Actuated g/C Ratio	0.17	0.35		0.32	0.51	0.51	0.22	0.22			0.22	0.54
Clearance Time (s)	6.0	6.0		6.0	6.0	6.0	6.0	6.0			6.0	6.0
Vehicle Extension (s)	3.0	3.0		3.0	3.0	3.0	3.0	3.0			3.0	3.0
Lane Grp Cap (vph)	289	1259		537	1823	815	224	374			178	900
v/s Ratio Prot	0.11	c0.29		c0.19	0.31			c0.20				0.06
v/s Ratio Perm						0.08	0.13				0.18	0.05
v/c Ratio	0.62	0.82		0.58	0.61	0.16	0.58	0.93			0.84	0.18
Uniform Delay, d1	44.9	34.3		33.1	20.7	15.6	40.8	44.7			43.6	13.6
Progression Factor	1.00	1.00		1.00	1.00	1.00	1.00	1.00			1.00	1.00
Incremental Delay, d2	3.9	6.0		1.6	1.5	0.4	3.9	29.4			27.5	0.1
Delay (s)	48.8	40.3		34.7	22.2	16.0	44.7	74.1			71.1	13.7
Level of Service	D	D		C	C	B	D	E			E	B
Approach Delay (s)		41.5			24.0			66.5			32.5	
Approach LOS		D			C			E			C	

Intersection Summary			
HCM 2000 Control Delay	36.4	HCM 2000 Level of Service	D
HCM 2000 Volume to Capacity ratio	0.78		
Actuated Cycle Length (s)	117.0	Sum of lost time (s)	14.0
Intersection Capacity Utilization	79.6%	ICU Level of Service	D
Analysis Period (min)	15		

c Critical Lane Group

Lane Group	NBL	NBT	NBR	SBL	SBT	SBR	SEL	SET	SER	NWL	NWT	NWR
Lane Configurations												
Traffic Volume (vph)	146	988	8	169	759	139	206	116	107	16	239	450
Future Volume (vph)	146	988	8	169	759	139	206	116	107	16	239	450
Lane Util. Factor	1.00	0.95	0.95	1.00	0.95	1.00	1.00	1.00	1.00	1.00	1.00	1.00
Frt		0.999				0.850		0.928				0.850
Flt Protected	0.950			0.950			0.950				0.997	
Satd. Flow (prot)	1685	3536	0	1668	3539	1599	1728	1688	0	0	1831	1561
Flt Permitted	0.950			0.950			0.256				0.837	
Satd. Flow (perm)	1685	3536	0	1668	3539	1599	466	1688	0	0	1537	1561
Satd. Flow (RTOR)		1				82		29				315
Adj. Flow (vph)	152	1029	8	190	853	156	229	129	119	18	263	495
Lane Group Flow (vph)	152	1037	0	190	853	156	229	248	0	0	281	495
Turn Type	Prot	NA		Prot	NA	Perm	Perm	NA		Perm	NA	pm+ov
Protected Phases	5	2		1	6			4			8	1
Permitted Phases						6	4			8		8
Detector Phase	5	2		1	6	6	4	4		8	8	1
Switch Phase												
Minimum Initial (s)	6.0	10.0		6.0	10.0	10.0	8.0	8.0		8.0	8.0	6.0
Minimum Split (s)	12.0	24.0		12.0	24.0	24.0	24.0	24.0		24.0	24.0	12.0
Total Split (s)	15.0	60.0		30.0	75.0	75.0	35.0	35.0		35.0	35.0	30.0
Total Split (%)	10.2%	40.8%		20.4%	51.0%	51.0%	23.8%	23.8%		23.8%	23.8%	20.4%
Maximum Green (s)	9.0	54.0		24.0	69.0	69.0	29.0	29.0		29.0	29.0	24.0
Yellow Time (s)	4.0	4.0		4.0	4.0	4.0	4.0	4.0		4.0	4.0	4.0
All-Red Time (s)	2.0	2.0		2.0	2.0	2.0	2.0	2.0		2.0	2.0	2.0
Lost Time Adjust (s)	-2.0	-2.0		-2.0	-2.0	-2.0	-2.0	-2.0			-2.0	-2.0
Total Lost Time (s)	4.0	4.0		4.0	4.0	4.0	4.0	4.0			4.0	4.0
Lead/Lag	Lead	Lag		Lead	Lag	Lag						Lead
Lead-Lag Optimize?	Yes	Yes		Yes	Yes	Yes						Yes
Vehicle Extension (s)	3.0	3.0		3.0	3.0	3.0	3.0	3.0		3.0	3.0	3.0
Recall Mode	None	C-Max		None	C-Max	C-Max	None	None		None	None	None
Walk Time (s)		7.0			7.0	7.0						
Flash Dont Walk (s)		11.0			7.0	7.0						
Pedestrian Calls (#/hr)		0			0	0						
v/c Ratio	0.50	0.54		0.69	0.46	0.18	2.34	0.66			0.87	0.61
Control Delay	61.2	23.8		70.5	22.5	8.8	657.4	56.0			81.7	14.3
Queue Delay	0.0	0.0		9.2	51.6	1.8	0.0	0.0			0.0	0.0
Total Delay	61.2	23.8		79.7	74.1	10.6	657.4	56.0			81.7	14.3
Queue Length 50th (ft)	135	326		174	254	33	~357	195			263	131
Queue Length 95th (ft)	208	440		243	311	73	#532	294			#423	225
Internal Link Dist (ft)		140			212			175			459	
Turn Bay Length (ft)	100			100		60	340					330
Base Capacity (vph)	303	1920		313	1866	882	98	378			324	845
Starvation Cap Reductn	0	0		90	1110	582	0	0			0	0
Spillback Cap Reductn	0	0		0	0	0	0	0			0	0
Storage Cap Reductn	0	0		0	0	0	0	0			0	0
Reduced v/c Ratio	0.50	0.54		0.85	1.13	0.52	2.34	0.66			0.87	0.59

Intersection Summary
Cycle Length: 147

Lane Group	Ø9
Lane Configurations	
Traffic Volume (vph)	
Future Volume (vph)	
Lane Util. Factor	
Frt	
Flt Protected	
Satd. Flow (prot)	
Flt Permitted	
Satd. Flow (perm)	
Satd. Flow (RTOR)	
Adj. Flow (vph)	
Lane Group Flow (vph)	
Turn Type	
Protected Phases	9
Permitted Phases	
Detector Phase	
Switch Phase	
Minimum Initial (s)	5.0
Minimum Split (s)	22.0
Total Split (s)	22.0
Total Split (%)	15%
Maximum Green (s)	20.0
Yellow Time (s)	2.0
All-Red Time (s)	0.0
Lost Time Adjust (s)	
Total Lost Time (s)	
Lead/Lag	
Lead-Lag Optimize?	
Vehicle Extension (s)	3.0
Recall Mode	None
Walk Time (s)	7.0
Flash Dont Walk (s)	13.0
Pedestrian Calls (#/hr)	0
v/c Ratio	
Control Delay	
Queue Delay	
Total Delay	
Queue Length 50th (ft)	
Queue Length 95th (ft)	
Internal Link Dist (ft)	
Turn Bay Length (ft)	
Base Capacity (vph)	
Starvation Cap Reductn	
Spillback Cap Reductn	
Storage Cap Reductn	
Reduced v/c Ratio	

Intersection Summary

Actuated Cycle Length: 147
Offset: 0 (0%), Referenced to phase 2:NBT and 6:SBT, Start of Green, Master Intersection
Natural Cycle: 115
Control Type: Actuated-Coordinated
~ Volume exceeds capacity, queue is theoretically infinite.
Queue shown is maximum after two cycles.
95th percentile volume exceeds capacity, queue may be longer.
Queue shown is maximum after two cycles.

Splits and Phases: 2: Main Street & Pond Street

Movement	NBL	NBT	NBR	SBL	SBT	SBR	SEL	SET	SER	NWL	NWT	NWR
Lane Configurations												
Traffic Volume (vph)	146	988	8	169	759	139	206	116	107	16	239	450
Future Volume (vph)	146	988	8	169	759	139	206	116	107	16	239	450
Ideal Flow (vphpl)	1900	1900	1900	1900	1900	1900	1900	1900	1900	1900	1900	1900
Lane Width	10	12	12	10	12	12	11	11	12	12	11	11
Total Lost time (s)	4.0	4.0		4.0	4.0	4.0	4.0	4.0			4.0	4.0
Lane Util. Factor	1.00	0.95		1.00	0.95	1.00	1.00	1.00			1.00	1.00
Frt	1.00	1.00		1.00	1.00	0.85	1.00	0.93			1.00	0.85
Flt Protected	0.95	1.00		0.95	1.00	1.00	0.95	1.00			1.00	1.00
Satd. Flow (prot)	1685	3536		1668	3539	1599	1728	1688			1831	1561
Flt Permitted	0.95	1.00		0.95	1.00	1.00	0.26	1.00			0.84	1.00
Satd. Flow (perm)	1685	3536		1668	3539	1599	466	1688			1538	1561
Peak-hour factor, PHF	0.96	0.96	0.96	0.89	0.89	0.89	0.90	0.90	0.90	0.91	0.91	0.91
Adj. Flow (vph)	152	1029	8	190	853	156	229	129	119	18	263	495
RTOR Reduction (vph)	0	0	0	0	0	39	0	23	0	0	0	197
Lane Group Flow (vph)	152	1037	0	190	853	117	229	225	0	0	281	298
Heavy Vehicles (%)	0%	2%	0%	1%	2%	1%	1%	0%	2%	0%	0%	0%
Turn Type	Prot	NA		Prot	NA	Perm	Perm	NA		Perm	NA	pm+ov
Protected Phases	5	2		1	6			4			8	1
Permitted Phases						6	4			8		8
Actuated Green, G (s)	24.5	77.8		22.2	75.5	75.5	29.0	29.0			29.0	51.2
Effective Green, g (s)	26.5	79.8		24.2	77.5	77.5	31.0	31.0			31.0	55.2
Actuated g/C Ratio	0.18	0.54		0.16	0.53	0.53	0.21	0.21			0.21	0.38
Clearance Time (s)	6.0	6.0		6.0	6.0	6.0	6.0	6.0			6.0	6.0
Vehicle Extension (s)	3.0	3.0		3.0	3.0	3.0	3.0	3.0			3.0	3.0
Lane Grp Cap (vph)	303	1919		274	1865	843	98	355			324	628
v/s Ratio Prot	0.09	c0.29		c0.11	0.24			0.13				0.08
v/s Ratio Perm						0.07	c0.49				0.18	0.11
v/c Ratio	0.50	0.54		0.69	0.46	0.14	2.34	0.63			0.87	0.47
Uniform Delay, d1	54.3	21.7		57.9	21.6	17.7	58.0	52.8			56.0	34.9
Progression Factor	1.00	1.00		1.00	1.00	1.00	1.00	1.00			1.00	1.00
Incremental Delay, d2	1.3	1.1		7.4	0.8	0.3	632.1	3.7			20.9	0.6
Delay (s)	55.6	22.8		65.3	22.5	18.1	690.1	56.5			76.9	35.5
Level of Service	E	C		E	C	B	F	E			E	D
Approach Delay (s)		27.0			28.7			360.7			50.5	
Approach LOS		C			C			F			D	

Intersection Summary			
HCM 2000 Control Delay	76.3	HCM 2000 Level of Service	E
HCM 2000 Volume to Capacity ratio	0.99		
Actuated Cycle Length (s)	147.0	Sum of lost time (s)	14.0
Intersection Capacity Utilization	78.1%	ICU Level of Service	D
Analysis Period (min)	15		

c Critical Lane Group

Lane Group	NBL	NBT	NBR	SBL	SBT	SBR	SEL	SET	SER	NWL	NWT	NWR
Lane Configurations												
Traffic Volume (vph)	107	770	32	389	1157	186	119	261	199	28	94	306
Future Volume (vph)	107	770	32	389	1157	186	119	261	199	28	94	306
Lane Util. Factor	1.00	0.95	0.95	1.00	0.95	1.00	1.00	1.00	1.00	1.00	1.00	1.00
Frt		0.994				0.850		0.935				0.850
Flt Protected	0.950			0.950			0.950				0.989	
Satd. Flow (prot)	1685	3588	0	1668	3505	1615	1694	1710	0	0	1816	1561
Flt Permitted	0.950			0.950			0.549				0.216	
Satd. Flow (perm)	1685	3588	0	1668	3505	1615	979	1710	0	0	397	1561
Satd. Flow (RTOR)		3				82		24				333
Adj. Flow (vph)	120	865	36	405	1205	194	125	275	209	31	106	344
Lane Group Flow (vph)	120	901	0	405	1205	194	125	484	0	0	137	344
Turn Type	Prot	NA		Prot	NA	Perm	Perm	NA		Perm	NA	pm+ov
Protected Phases	5	2		1	6			4			8	1
Permitted Phases						6	4			8		8
Detector Phase	5	2		1	6	6	4	4		8	8	1
Switch Phase												
Minimum Initial (s)	6.0	10.0		6.0	10.0	10.0	8.0	8.0		8.0	8.0	6.0
Minimum Split (s)	12.0	24.0		12.0	24.0	24.0	24.0	24.0		24.0	24.0	12.0
Total Split (s)	15.0	60.0		30.0	75.0	75.0	35.0	35.0		35.0	35.0	30.0
Total Split (%)	10.2%	40.8%		20.4%	51.0%	51.0%	23.8%	23.8%		23.8%	23.8%	20.4%
Maximum Green (s)	9.0	54.0		24.0	69.0	69.0	29.0	29.0		29.0	29.0	24.0
Yellow Time (s)	4.0	4.0		4.0	4.0	4.0	4.0	4.0		4.0	4.0	4.0
All-Red Time (s)	2.0	2.0		2.0	2.0	2.0	2.0	2.0		2.0	2.0	2.0
Lost Time Adjust (s)	-2.0	-2.0		-2.0	-2.0	-2.0	-2.0	-2.0			-2.0	-2.0
Total Lost Time (s)	4.0	4.0		4.0	4.0	4.0	4.0	4.0			4.0	4.0
Lead/Lag	Lead	Lag		Lead	Lag	Lag						Lead
Lead-Lag Optimize?	Yes	Yes		Yes	Yes	Yes						Yes
Vehicle Extension (s)	3.0	3.0		3.0	3.0	3.0	3.0	3.0		3.0	3.0	3.0
Recall Mode	None	C-Max		None	C-Max	C-Max	None	None		None	None	None
Walk Time (s)		7.0			7.0	7.0						
Flash Dont Walk (s)		11.0			7.0	7.0						
Pedestrian Calls (#/hr)		0			0	0						
v/c Ratio	0.53	0.66		0.74	0.60	0.20	0.61	1.28			1.65	0.34
Control Delay	67.5	40.3		53.8	22.4	9.5	66.4	187.0			375.5	2.6
Queue Delay	0.0	0.0		57.5	49.9	1.9	0.0	0.0			0.0	0.0
Total Delay	67.5	40.3		111.3	72.3	11.3	66.4	187.0			375.5	2.6
Queue Length 50th (ft)	108	372		346	383	48	109	~568			~189	4
Queue Length 95th (ft)	171	440		477	478	94	185	#796			#326	47
Internal Link Dist (ft)		140			212			175			459	
Turn Bay Length (ft)	100			100		60	340					330
Base Capacity (vph)	227	1368		544	2006	959	206	379			83	1026
Starvation Cap Reductn	0	0		255	1006	615	0	0			0	0
Spillback Cap Reductn	0	0		0	0	0	0	0			0	0
Storage Cap Reductn	0	0		0	0	0	0	0			0	0
Reduced v/c Ratio	0.53	0.66		1.40	1.21	0.56	0.61	1.28			1.65	0.34

Intersection Summary
Cycle Length: 147

Lane Group	Ø9
Lane Configurations	
Traffic Volume (vph)	
Future Volume (vph)	
Lane Util. Factor	
Frt	
Flt Protected	
Satd. Flow (prot)	
Flt Permitted	
Satd. Flow (perm)	
Satd. Flow (RTOR)	
Adj. Flow (vph)	
Lane Group Flow (vph)	
Turn Type	
Protected Phases	9
Permitted Phases	
Detector Phase	
Switch Phase	
Minimum Initial (s)	5.0
Minimum Split (s)	22.0
Total Split (s)	22.0
Total Split (%)	15%
Maximum Green (s)	20.0
Yellow Time (s)	2.0
All-Red Time (s)	0.0
Lost Time Adjust (s)	
Total Lost Time (s)	
Lead/Lag	
Lead-Lag Optimize?	
Vehicle Extension (s)	3.0
Recall Mode	None
Walk Time (s)	7.0
Flash Dont Walk (s)	13.0
Pedestrian Calls (#/hr)	0
v/c Ratio	
Control Delay	
Queue Delay	
Total Delay	
Queue Length 50th (ft)	
Queue Length 95th (ft)	
Internal Link Dist (ft)	
Turn Bay Length (ft)	
Base Capacity (vph)	
Starvation Cap Reductn	
Spillback Cap Reductn	
Storage Cap Reductn	
Reduced v/c Ratio	

Intersection Summary

Actuated Cycle Length: 147
Offset: 0 (0%), Referenced to phase 2:NBT and 6:SBT, Start of Green, Master Intersection
Natural Cycle: 135
Control Type: Actuated-Coordinated
~ Volume exceeds capacity, queue is theoretically infinite.
Queue shown is maximum after two cycles.
95th percentile volume exceeds capacity, queue may be longer.
Queue shown is maximum after two cycles.

Splits and Phases: 2: Main Street & Pond Street

Movement	NBL	NBT	NBR	SBL	SBT	SBR	SEL	SET	SER	NWL	NWT	NWR
Lane Configurations												
Traffic Volume (vph)	107	770	32	389	1157	186	119	261	199	28	94	306
Future Volume (vph)	107	770	32	389	1157	186	119	261	199	28	94	306
Ideal Flow (vphpl)	1900	1900	1900	1900	1900	1900	1900	1900	1900	1900	1900	1900
Lane Width	10	12	12	10	12	12	11	11	12	12	11	11
Total Lost time (s)	4.0	4.0		4.0	4.0	4.0	4.0	4.0			4.0	4.0
Lane Util. Factor	1.00	0.95		1.00	0.95	1.00	1.00	1.00			1.00	1.00
Frt	1.00	0.99		1.00	1.00	0.85	1.00	0.94			1.00	0.85
Flt Protected	0.95	1.00		0.95	1.00	1.00	0.95	1.00			0.99	1.00
Satd. Flow (prot)	1685	3588		1668	3505	1615	1694	1710			1816	1561
Flt Permitted	0.95	1.00		0.95	1.00	1.00	0.55	1.00			0.22	1.00
Satd. Flow (perm)	1685	3588		1668	3505	1615	980	1710			397	1561
Peak-hour factor, PHF	0.89	0.89	0.89	0.96	0.96	0.96	0.95	0.95	0.95	0.89	0.89	0.89
Adj. Flow (vph)	120	865	36	405	1205	194	125	275	209	31	106	344
RTOR Reduction (vph)	0	2	0	0	0	35	0	19	0	0	0	154
Lane Group Flow (vph)	120	899	0	405	1205	159	125	465	0	0	137	190
Heavy Vehicles (%)	0%	0%	0%	1%	3%	0%	3%	0%	1%	0%	0%	0%
Turn Type	Prot	NA		Prot	NA	Perm	Perm	NA		Perm	NA	pm+ov
Protected Phases	5	2		1	6			4			8	1
Permitted Phases						6	4			8		8
Actuated Green, G (s)	17.9	54.0		46.0	82.1	82.1	29.0	29.0			29.0	75.0
Effective Green, g (s)	19.9	56.0		48.0	84.1	84.1	31.0	31.0			31.0	79.0
Actuated g/C Ratio	0.14	0.38		0.33	0.57	0.57	0.21	0.21			0.21	0.54
Clearance Time (s)	6.0	6.0		6.0	6.0	6.0	6.0	6.0			6.0	6.0
Vehicle Extension (s)	3.0	3.0		3.0	3.0	3.0	3.0	3.0			3.0	3.0
Lane Grp Cap (vph)	228	1366		544	2005	923	206	360			83	881
v/s Ratio Prot	0.07	c0.25		c0.24	0.34			0.27				0.07
v/s Ratio Perm						0.10	0.13				c0.35	0.05
v/c Ratio	0.53	0.66		0.74	0.60	0.17	0.61	1.29			1.65	0.22
Uniform Delay, d1	59.2	37.6		44.0	20.5	14.9	52.5	58.0			58.0	17.8
Progression Factor	1.00	1.00		1.00	1.00	1.00	1.00	1.00			1.00	1.00
Incremental Delay, d2	2.2	2.5		5.5	1.3	0.4	5.0	150.6			340.1	0.1
Delay (s)	61.4	40.1		49.5	21.9	15.3	57.5	208.6			398.1	17.9
Level of Service	E	D		D	C	B	E	F			F	B
Approach Delay (s)		42.6			27.4			177.6			126.2	
Approach LOS		D			C			F			F	

Intersection Summary			
HCM 2000 Control Delay	66.8	HCM 2000 Level of Service	E
HCM 2000 Volume to Capacity ratio	0.93		
Actuated Cycle Length (s)	147.0	Sum of lost time (s)	14.0
Intersection Capacity Utilization	83.2%	ICU Level of Service	E
Analysis Period (min)	15		

c Critical Lane Group

Lane Group	NBL	NBT	NBR	SBL	SBT	SBR	SEL	SET	SER	NWL	NWT	NWR
Lane Configurations												
Traffic Volume (vph)	159	869	38	295	1090	169	162	172	155	41	113	284
Future Volume (vph)	159	869	38	295	1090	169	162	172	155	41	113	284
Lane Util. Factor	1.00	0.95	0.95	1.00	0.95	1.00	1.00	1.00	1.00	1.00	1.00	1.00
Frt		0.994				0.850		0.929				0.850
Flt Protected	0.950			0.950			0.950				0.987	
Satd. Flow (prot)	1685	3554	0	1668	3610	1615	1745	1706	0	0	1813	1561
Flt Permitted	0.950			0.950			0.521				0.272	
Satd. Flow (perm)	1685	3554	0	1668	3610	1615	957	1706	0	0	500	1561
Satd. Flow (RTOR)		4				103		36				305
Adj. Flow (vph)	177	966	42	314	1160	180	200	212	191	44	122	305
Lane Group Flow (vph)	177	1008	0	314	1160	180	200	403	0	0	166	305
Turn Type	Prot	NA		Prot	NA	Perm	Perm	NA		Perm	NA	pm+ov
Protected Phases	5	2		1	6			4			8	1
Permitted Phases						6	4			8		8
Detector Phase	5	2		1	6	6	4	4		8	8	1
Switch Phase												
Minimum Initial (s)	6.0	10.0		6.0	10.0	10.0	8.0	8.0		8.0	8.0	6.0
Minimum Split (s)	12.0	24.0		12.0	24.0	24.0	24.0	24.0		24.0	24.0	12.0
Total Split (s)	20.0	45.0		20.0	45.0	45.0	30.0	30.0		30.0	30.0	20.0
Total Split (%)	17.1%	38.5%		17.1%	38.5%	38.5%	25.6%	25.6%		25.6%	25.6%	17.1%
Maximum Green (s)	14.0	39.0		14.0	39.0	39.0	24.0	24.0		24.0	24.0	14.0
Yellow Time (s)	4.0	4.0		4.0	4.0	4.0	4.0	4.0		4.0	4.0	4.0
All-Red Time (s)	2.0	2.0		2.0	2.0	2.0	2.0	2.0		2.0	2.0	2.0
Lost Time Adjust (s)	-2.0	-2.0		-2.0	-2.0	-2.0	-2.0	-2.0			-2.0	-2.0
Total Lost Time (s)	4.0	4.0		4.0	4.0	4.0	4.0	4.0			4.0	4.0
Lead/Lag	Lead	Lag		Lead	Lag	Lag						Lead
Lead-Lag Optimize?	Yes	Yes		Yes	Yes	Yes						Yes
Vehicle Extension (s)	3.0	3.0		3.0	3.0	3.0	3.0	3.0		3.0	3.0	3.0
Recall Mode	None	C-Max		None	C-Max	C-Max	None	None		None	None	None
Walk Time (s)		7.0			7.0	7.0						
Flash Dont Walk (s)		11.0			7.0	7.0						
Pedestrian Calls (#/hr)		0			0	0						
v/c Ratio	0.62	0.80		0.59	0.64	0.21	0.94	0.99			1.50	0.30
Control Delay	54.0	39.6		38.7	23.9	8.3	94.6	84.2			298.1	2.0
Queue Delay	0.0	0.0		29.8	49.8	1.0	0.0	0.0			0.0	0.0
Total Delay	54.0	39.6		68.5	73.7	9.3	94.6	84.2			298.1	2.0
Queue Length 50th (ft)	125	352		199	325	29	149	282			~173	0
Queue Length 95th (ft)	189	443		292	439	76	#251	#405			#315	36
Internal Link Dist (ft)		170			212			232			459	
Turn Bay Length (ft)	100			100		60	340					330
Base Capacity (vph)	293	1262		534	1823	866	212	407			111	1029
Starvation Cap Reductn	0	0		224	834	472	0	0			0	0
Spillback Cap Reductn	0	0		0	0	0	0	0			0	0
Storage Cap Reductn	0	0		0	0	0	0	0			0	0
Reduced v/c Ratio	0.60	0.80		1.01	1.17	0.46	0.94	0.99			1.50	0.30

Intersection Summary
Cycle Length: 117

Lane Group	Ø9
Lane Configurations	
Traffic Volume (vph)	
Future Volume (vph)	
Lane Util. Factor	
Frt	
Flt Protected	
Satd. Flow (prot)	
Flt Permitted	
Satd. Flow (perm)	
Satd. Flow (RTOR)	
Adj. Flow (vph)	
Lane Group Flow (vph)	
Turn Type	
Protected Phases	9
Permitted Phases	
Detector Phase	
Switch Phase	
Minimum Initial (s)	5.0
Minimum Split (s)	22.0
Total Split (s)	22.0
Total Split (%)	19%
Maximum Green (s)	20.0
Yellow Time (s)	2.0
All-Red Time (s)	0.0
Lost Time Adjust (s)	
Total Lost Time (s)	
Lead/Lag	
Lead-Lag Optimize?	
Vehicle Extension (s)	3.0
Recall Mode	None
Walk Time (s)	7.0
Flash Dont Walk (s)	13.0
Pedestrian Calls (#/hr)	0
v/c Ratio	
Control Delay	
Queue Delay	
Total Delay	
Queue Length 50th (ft)	
Queue Length 95th (ft)	
Internal Link Dist (ft)	
Turn Bay Length (ft)	
Base Capacity (vph)	
Starvation Cap Reductn	
Spillback Cap Reductn	
Storage Cap Reductn	
Reduced v/c Ratio	

Intersection Summary

Actuated Cycle Length: 117
Offset: 0 (0%), Referenced to phase 2:NBT and 6:SBT, Start of Green, Master Intersection
Natural Cycle: 105
Control Type: Actuated-Coordinated
~ Volume exceeds capacity, queue is theoretically infinite.
Queue shown is maximum after two cycles.
95th percentile volume exceeds capacity, queue may be longer.
Queue shown is maximum after two cycles.

Splits and Phases: 2: Main Street & Pond Street

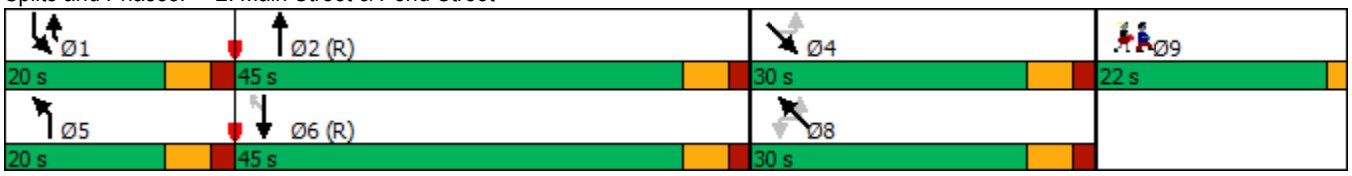

Movement	NBL	NBT	NBR	SBL	SBT	SBR	SEL	SET	SER	NWL	NWT	NWR
Lane Configurations												
Traffic Volume (vph)	159	869	38	295	1090	169	162	172	155	41	113	284
Future Volume (vph)	159	869	38	295	1090	169	162	172	155	41	113	284
Ideal Flow (vphpl)	1900	1900	1900	1900	1900	1900	1900	1900	1900	1900	1900	1900
Lane Width	10	12	12	10	12	12	11	11	12	12	11	11
Total Lost time (s)	4.0	4.0		4.0	4.0	4.0	4.0	4.0			4.0	4.0
Lane Util. Factor	1.00	0.95		1.00	0.95	1.00	1.00	1.00			1.00	1.00
Frt	1.00	0.99		1.00	1.00	0.85	1.00	0.93			1.00	0.85
Flt Protected	0.95	1.00		0.95	1.00	1.00	0.95	1.00			0.99	1.00
Satd. Flow (prot)	1685	3553		1668	3610	1615	1745	1706			1813	1561
Flt Permitted	0.95	1.00		0.95	1.00	1.00	0.52	1.00			0.27	1.00
Satd. Flow (perm)	1685	3553		1668	3610	1615	956	1706			500	1561
Peak-hour factor, PHF	0.90	0.90	0.90	0.94	0.94	0.94	0.81	0.81	0.81	0.93	0.93	0.93
Adj. Flow (vph)	177	966	42	314	1160	180	200	212	191	44	122	305
RTOR Reduction (vph)	0	3	0	0	0	51	0	28	0	0	0	139
Lane Group Flow (vph)	177	1005	0	314	1160	129	200	375	0	0	166	166
Heavy Vehicles (%)	0%	1%	0%	1%	0%	0%	0%	0%	0%	0%	0%	0%
Turn Type	Prot	NA		Prot	NA	Perm	Perm	NA		Perm	NA	pm+ov
Protected Phases	5	2		1	6			4			8	1
Permitted Phases						6	4			8		8
Actuated Green, G (s)	17.9	39.5		35.5	57.1	57.1	24.0	24.0			24.0	59.5
Effective Green, g (s)	19.9	41.5		37.5	59.1	59.1	26.0	26.0			26.0	63.5
Actuated g/C Ratio	0.17	0.35		0.32	0.51	0.51	0.22	0.22			0.22	0.54
Clearance Time (s)	6.0	6.0		6.0	6.0	6.0	6.0	6.0			6.0	6.0
Vehicle Extension (s)	3.0	3.0		3.0	3.0	3.0	3.0	3.0			3.0	3.0
Lane Grp Cap (vph)	286	1260		534	1823	815	212	379			111	900
v/s Ratio Prot	0.11	c0.28		c0.19	c0.32			0.22				0.06
v/s Ratio Perm						0.08	0.21				c0.33	0.05
v/c Ratio	0.62	0.80		0.59	0.64	0.16	0.94	0.99			1.50	0.18
Uniform Delay, d1	45.0	34.0		33.3	21.1	15.6	44.8	45.4			45.5	13.6
Progression Factor	1.00	1.00		1.00	1.00	1.00	1.00	1.00			1.00	1.00
Incremental Delay, d2	4.0	5.3		1.7	1.7	0.4	45.8	42.9			264.3	0.1
Delay (s)	49.0	39.3		34.9	22.8	16.0	90.5	88.3			309.8	13.7
Level of Service	D	D		C	C	B	F	F			F	B
Approach Delay (s)		40.8			24.4			89.0			118.0	
Approach LOS		D			C			F			F	

Intersection Summary			
HCM 2000 Control Delay	50.6	HCM 2000 Level of Service	D
HCM 2000 Volume to Capacity ratio	0.91		
Actuated Cycle Length (s)	117.0	Sum of lost time (s)	14.0
Intersection Capacity Utilization	81.6%	ICU Level of Service	D
Analysis Period (min)	15		

c Critical Lane Group

Lane Group	NBL	NBT	NBR	SBL	SBT	SBR	SEL	SET	SER	NWL	NWT	NWR
Lane Configurations												
Traffic Volume (vph)	146	988	8	169	759	139	206	116	107	16	239	450
Future Volume (vph)	146	988	8	169	759	139	206	116	107	16	239	450
Lane Util. Factor	1.00	0.95	0.95	1.00	0.95	1.00	1.00	1.00	1.00	1.00	1.00	1.00
Frt		0.999				0.850		0.928				0.850
Flt Protected	0.950			0.950			0.950				0.997	
Satd. Flow (prot)	1685	3536	0	1668	3539	1599	1728	1688	0	0	1831	1561
Flt Permitted	0.950			0.950			0.386				0.970	
Satd. Flow (perm)	1685	3536	0	1668	3539	1599	702	1688	0	0	1782	1561
Satd. Flow (RTOR)		1				133		50				495
Adj. Flow (vph)	152	1029	8	190	853	156	229	129	119	18	263	495
Lane Group Flow (vph)	152	1037	0	190	853	156	229	248	0	0	281	495
Turn Type	Prot	NA		Prot	NA	Perm	Perm	NA		Perm	NA	pm+ov
Protected Phases	5	2		1	6			4			8	1
Permitted Phases						6	4			8		8
Detector Phase	5	2		1	6	6	4	4		8	8	1
Switch Phase												
Minimum Initial (s)	6.0	10.0		6.0	10.0	10.0	8.0	8.0		8.0	8.0	6.0
Minimum Split (s)	12.0	24.0		12.0	24.0	24.0	24.0	24.0		24.0	24.0	12.0
Total Split (s)	12.0	28.0		12.0	28.0	28.0	28.0	28.0		28.0	28.0	12.0
Total Split (%)	13.3%	31.1%		13.3%	31.1%	31.1%	31.1%	31.1%		31.1%	31.1%	13.3%
Maximum Green (s)	6.0	22.0		6.0	22.0	22.0	22.0	22.0		22.0	22.0	6.0
Yellow Time (s)	4.0	4.0		4.0	4.0	4.0	4.0	4.0		4.0	4.0	4.0
All-Red Time (s)	2.0	2.0		2.0	2.0	2.0	2.0	2.0		2.0	2.0	2.0
Lost Time Adjust (s)	-2.0	-2.0		-2.0	-2.0	-2.0	-2.0	-2.0			-2.0	-2.0
Total Lost Time (s)	4.0	4.0		4.0	4.0	4.0	4.0	4.0			4.0	4.0
Lead/Lag	Lag	Lag		Lead	Lead	Lead						Lead
Lead-Lag Optimize?	Yes	Yes		Yes	Yes	Yes						Yes
Vehicle Extension (s)	3.0	3.0		3.0	3.0	3.0	3.0	3.0		3.0	3.0	3.0
Recall Mode	None	C-Max		None	C-Max	C-Max	None	None		None	None	None
Walk Time (s)		7.0			7.0	7.0						
Flash Dont Walk (s)		11.0			7.0	7.0						
Pedestrian Calls (#/hr)		0			0	0						
v/c Ratio	1.02	0.86		0.44	0.47	0.18	1.22	0.51			0.59	0.45
Control Delay	122.7	36.0		24.3	12.0	1.8	171.5	26.4			34.7	2.3
Queue Delay	0.0	0.5		0.0	0.7	0.0	0.0	0.0			0.0	0.1
Total Delay	122.7	36.4		24.3	12.6	1.8	171.5	26.4			34.7	2.4
Queue Length 50th (ft)	~90	275		76	123	6	~162	94			139	0
Queue Length 95th (ft)	#212	#381		m108	m145	m15	#303	169			222	40
Internal Link Dist (ft)		138			212			222			459	
Turn Bay Length (ft)	100			100		60	340					330
Base Capacity (vph)	149	1210		430	1808	882	187	486			475	1101
Starvation Cap Reductn	0	0		0	557	0	0	0			0	0
Spillback Cap Reductn	0	25		0	0	0	0	0			0	71
Storage Cap Reductn	0	0		0	0	0	0	0			0	0
Reduced v/c Ratio	1.02	0.88		0.44	0.68	0.18	1.22	0.51			0.59	0.48

Intersection Summary
Cycle Length: 90

Lane Group	Ø9
Lane Configurations	
Traffic Volume (vph)	
Future Volume (vph)	
Lane Util. Factor	
Frt	
Flt Protected	
Satd. Flow (prot)	
Flt Permitted	
Satd. Flow (perm)	
Satd. Flow (RTOR)	
Adj. Flow (vph)	
Lane Group Flow (vph)	
Turn Type	
Protected Phases	9
Permitted Phases	
Detector Phase	
Switch Phase	
Minimum Initial (s)	5.0
Minimum Split (s)	22.0
Total Split (s)	22.0
Total Split (%)	24%
Maximum Green (s)	20.0
Yellow Time (s)	2.0
All-Red Time (s)	0.0
Lost Time Adjust (s)	
Total Lost Time (s)	
Lead/Lag	
Lead-Lag Optimize?	
Vehicle Extension (s)	3.0
Recall Mode	None
Walk Time (s)	7.0
Flash Dont Walk (s)	13.0
Pedestrian Calls (#/hr)	0
v/c Ratio	
Control Delay	
Queue Delay	
Total Delay	
Queue Length 50th (ft)	
Queue Length 95th (ft)	
Internal Link Dist (ft)	
Turn Bay Length (ft)	
Base Capacity (vph)	
Starvation Cap Reductn	
Spillback Cap Reductn	
Storage Cap Reductn	
Reduced v/c Ratio	

Intersection Summary

Actuated Cycle Length: 90
Offset: 0 (0%), Referenced to phase 2:NBT and 6:SBT, Start of Green, Master Intersection
Natural Cycle: 115
Control Type: Actuated-Coordinated
~ Volume exceeds capacity, queue is theoretically infinite.
Queue shown is maximum after two cycles.
95th percentile volume exceeds capacity, queue may be longer.
Queue shown is maximum after two cycles.
m Volume for 95th percentile queue is metered by upstream signal.

Splits and Phases: 2: Main Street & Pond Street

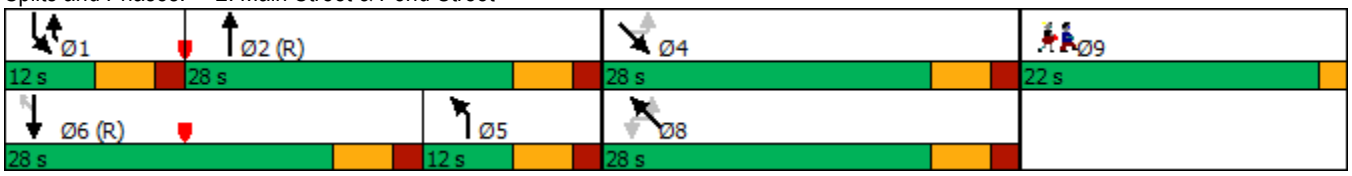

Movement	NBL	NBT	NBR	SBL	SBT	SBR	SEL	SET	SER	NWL	NWT	NWR
Lane Configurations												
Traffic Volume (vph)	146	988	8	169	759	139	206	116	107	16	239	450
Future Volume (vph)	146	988	8	169	759	139	206	116	107	16	239	450
Ideal Flow (vphpl)	1900	1900	1900	1900	1900	1900	1900	1900	1900	1900	1900	1900
Lane Width	10	12	12	10	12	12	11	11	12	12	11	11
Total Lost time (s)	4.0	4.0		4.0	4.0	4.0	4.0	4.0			4.0	4.0
Lane Util. Factor	1.00	0.95		1.00	0.95	1.00	1.00	1.00			1.00	1.00
Frt	1.00	1.00		1.00	1.00	0.85	1.00	0.93			1.00	0.85
Flt Protected	0.95	1.00		0.95	1.00	1.00	0.95	1.00			1.00	1.00
Satd. Flow (prot)	1685	3536		1668	3539	1599	1728	1688			1831	1561
Flt Permitted	0.95	1.00		0.95	1.00	1.00	0.39	1.00			0.97	1.00
Satd. Flow (perm)	1685	3536		1668	3539	1599	702	1688			1782	1561
Peak-hour factor, PHF	0.96	0.96	0.96	0.89	0.89	0.89	0.90	0.90	0.90	0.91	0.91	0.91
Adj. Flow (vph)	152	1029	8	190	853	156	229	129	119	18	263	495
RTOR Reduction (vph)	0	1	0	0	0	65	0	37	0	0	0	235
Lane Group Flow (vph)	152	1036	0	190	853	91	229	211	0	0	281	260
Heavy Vehicles (%)	0%	2%	0%	1%	2%	1%	1%	0%	2%	0%	0%	0%
Turn Type	Prot	NA		Prot	NA	Perm	Perm	NA		Perm	NA	pm+ov
Protected Phases	5	2		1	6			4			8	1
Permitted Phases						6	4			8		8
Actuated Green, G (s)	6.0	28.8		21.2	44.0	44.0	22.0	22.0			22.0	43.2
Effective Green, g (s)	8.0	30.8		23.2	46.0	46.0	24.0	24.0			24.0	47.2
Actuated g/C Ratio	0.09	0.34		0.26	0.51	0.51	0.27	0.27			0.27	0.52
Clearance Time (s)	6.0	6.0		6.0	6.0	6.0	6.0	6.0			6.0	6.0
Vehicle Extension (s)	3.0	3.0		3.0	3.0	3.0	3.0	3.0			3.0	3.0
Lane Grp Cap (vph)	149	1210		429	1808	817	187	450			475	888
v/s Ratio Prot	0.09	c0.29		0.11	c0.24			0.13				0.08
v/s Ratio Perm						0.06	c0.33				0.16	0.09
v/c Ratio	1.02	0.86		0.44	0.47	0.11	1.22	0.47			0.59	0.29
Uniform Delay, d1	41.0	27.5		28.0	14.2	11.4	33.0	27.7			28.7	12.0
Progression Factor	1.00	1.00		0.74	0.78	0.46	1.00	1.00			1.00	1.00
Incremental Delay, d2	79.1	7.9		0.6	0.8	0.2	139.2	0.8			2.0	0.2
Delay (s)	120.1	35.5		21.4	11.8	5.5	172.2	28.4			30.7	12.2
Level of Service	F	D		C	B	A	F	C			C	B
Approach Delay (s)		46.3			12.5			97.4			18.9	
Approach LOS		D			B			F			B	

Intersection Summary			
HCM 2000 Control Delay	36.0	HCM 2000 Level of Service	D
HCM 2000 Volume to Capacity ratio	0.89		
Actuated Cycle Length (s)	90.0	Sum of lost time (s)	14.0
Intersection Capacity Utilization	78.1%	ICU Level of Service	D
Analysis Period (min)	15		

c Critical Lane Group

Lane Group	NBL	NBT	NBR	SBL	SBT	SBR	SEL	SET	SER	NWL	NWT	NWR
Lane Configurations												
Traffic Volume (vph)	107	770	32	389	1157	186	119	261	199	28	94	306
Future Volume (vph)	107	770	32	389	1157	186	119	261	199	28	94	306
Lane Util. Factor	1.00	0.95	0.95	1.00	0.95	1.00	1.00	1.00	1.00	1.00	1.00	1.00
Frt		0.994				0.850		0.935				0.850
Flt Protected	0.950			0.950			0.950				0.989	
Satd. Flow (prot)	1685	3588	0	1668	3505	1615	1694	1710	0	0	1816	1561
Flt Permitted	0.950			0.950			0.593				0.278	
Satd. Flow (perm)	1685	3588	0	1668	3505	1615	1057	1710	0	0	511	1561
Satd. Flow (RTOR)		3				100		30				344
Adj. Flow (vph)	120	865	36	405	1205	194	125	275	209	31	106	344
Lane Group Flow (vph)	120	901	0	405	1205	194	125	484	0	0	137	344
Turn Type	Prot	NA		Prot	NA	Perm	Perm	NA		Perm	NA	pm+ov
Protected Phases	5	2		1	6			4			8	1
Permitted Phases						6	4			8		8
Detector Phase	5	2		1	6	6	4	4		8	8	1
Switch Phase												
Minimum Initial (s)	6.0	10.0		6.0	10.0	10.0	8.0	8.0		8.0	8.0	6.0
Minimum Split (s)	12.0	24.0		12.0	24.0	24.0	24.0	24.0		24.0	24.0	12.0
Total Split (s)	13.0	32.0		32.0	51.0	51.0	34.0	34.0		34.0	34.0	32.0
Total Split (%)	10.8%	26.7%		26.7%	42.5%	42.5%	28.3%	28.3%		28.3%	28.3%	26.7%
Maximum Green (s)	7.0	26.0		26.0	45.0	45.0	28.0	28.0		28.0	28.0	26.0
Yellow Time (s)	4.0	4.0		4.0	4.0	4.0	4.0	4.0		4.0	4.0	4.0
All-Red Time (s)	2.0	2.0		2.0	2.0	2.0	2.0	2.0		2.0	2.0	2.0
Lost Time Adjust (s)	-2.0	-2.0		-2.0	-2.0	-2.0	-2.0	-2.0			-2.0	-2.0
Total Lost Time (s)	4.0	4.0		4.0	4.0	4.0	4.0	4.0			4.0	4.0
Lead/Lag	Lag	Lead		Lag	Lead	Lead						Lag
Lead-Lag Optimize?	Yes	Yes		Yes	Yes	Yes						Yes
Vehicle Extension (s)	3.0	3.0		3.0	3.0	3.0	3.0	3.0		3.0	3.0	3.0
Recall Mode	None	C-Max		None	C-Max	C-Max	None	None		None	None	None
Walk Time (s)		7.0			7.0	7.0						
Flash Dont Walk (s)		11.0			7.0	7.0						
Pedestrian Calls (#/hr)		0			0	0						
v/c Ratio	0.95	0.60		1.04	0.60	0.20	0.47	1.08			1.08	0.35
Control Delay	124.0	29.2		94.8	16.2	3.7	45.3	104.6			146.2	2.6
Queue Delay	0.0	1.4		24.7	3.9	1.0	0.0	0.0			0.0	0.0
Total Delay	124.0	30.7		119.5	20.1	4.6	45.3	104.6			146.2	2.7
Queue Length 50th (ft)	94	280		~342	345	12	83	~400			~118	0
Queue Length 95th (ft)	#212	342		m#514	373	m24	147	#613			#244	43
Internal Link Dist (ft)		138			212			193			459	
Turn Bay Length (ft)	100			100		60	340					330
Base Capacity (vph)	126	1496		389	2015	971	264	450			127	972
Starvation Cap Reductn	0	0		117	707	552	0	0			0	0
Spillback Cap Reductn	0	381		0	0	0	0	0			0	36
Storage Cap Reductn	0	0		0	0	0	0	0			0	0
Reduced v/c Ratio	0.95	0.81		1.49	0.92	0.46	0.47	1.08			1.08	0.37

Intersection Summary
Cycle Length: 120

Lane Group	Ø9
Lane Configurations	
Traffic Volume (vph)	
Future Volume (vph)	
Lane Util. Factor	
Frt	
Flt Protected	
Satd. Flow (prot)	
Flt Permitted	
Satd. Flow (perm)	
Satd. Flow (RTOR)	
Adj. Flow (vph)	
Lane Group Flow (vph)	
Turn Type	
Protected Phases	9
Permitted Phases	
Detector Phase	
Switch Phase	
Minimum Initial (s)	5.0
Minimum Split (s)	22.0
Total Split (s)	22.0
Total Split (%)	18%
Maximum Green (s)	20.0
Yellow Time (s)	2.0
All-Red Time (s)	0.0
Lost Time Adjust (s)	
Total Lost Time (s)	
Lead/Lag	
Lead-Lag Optimize?	
Vehicle Extension (s)	3.0
Recall Mode	None
Walk Time (s)	7.0
Flash Dont Walk (s)	13.0
Pedestrian Calls (#/hr)	0
v/c Ratio	
Control Delay	
Queue Delay	
Total Delay	
Queue Length 50th (ft)	
Queue Length 95th (ft)	
Internal Link Dist (ft)	
Turn Bay Length (ft)	
Base Capacity (vph)	
Starvation Cap Reductn	
Spillback Cap Reductn	
Storage Cap Reductn	
Reduced v/c Ratio	

Intersection Summary

Actuated Cycle Length: 120
Offset: 0 (0%), Referenced to phase 2:NBT and 6:SBT, Start of Green, Master Intersection
Natural Cycle: 135
Control Type: Actuated-Coordinated
~ Volume exceeds capacity, queue is theoretically infinite.
Queue shown is maximum after two cycles.
95th percentile volume exceeds capacity, queue may be longer.
Queue shown is maximum after two cycles.
m Volume for 95th percentile queue is metered by upstream signal.

Splits and Phases: 2: Main Street & Pond Street

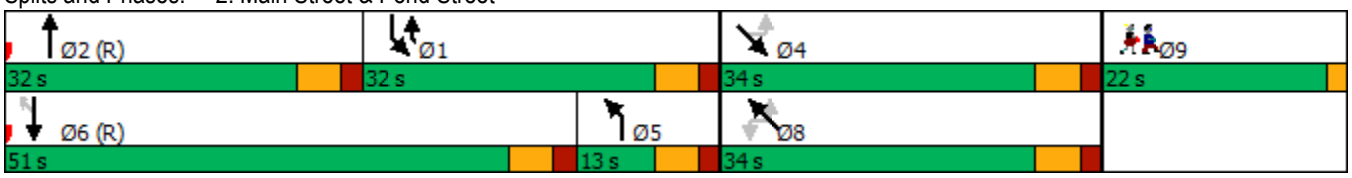

Movement	NBL	NBT	NBR	SBL	SBT	SBR	SEL	SET	SER	NWL	NWT	NWR
Lane Configurations												
Traffic Volume (vph)	107	770	32	389	1157	186	119	261	199	28	94	306
Future Volume (vph)	107	770	32	389	1157	186	119	261	199	28	94	306
Ideal Flow (vphpl)	1900	1900	1900	1900	1900	1900	1900	1900	1900	1900	1900	1900
Lane Width	10	12	12	10	12	12	11	11	12	12	11	11
Total Lost time (s)	4.0	4.0		4.0	4.0	4.0	4.0	4.0			4.0	4.0
Lane Util. Factor	1.00	0.95		1.00	0.95	1.00	1.00	1.00			1.00	1.00
Frt	1.00	0.99		1.00	1.00	0.85	1.00	0.94			1.00	0.85
Flt Protected	0.95	1.00		0.95	1.00	1.00	0.95	1.00			0.99	1.00
Satd. Flow (prot)	1685	3588		1668	3505	1615	1694	1710			1816	1561
Flt Permitted	0.95	1.00		0.95	1.00	1.00	0.59	1.00			0.28	1.00
Satd. Flow (perm)	1685	3588		1668	3505	1615	1058	1710			510	1561
Peak-hour factor, PHF	0.89	0.89	0.89	0.96	0.96	0.96	0.95	0.95	0.95	0.89	0.89	0.89
Adj. Flow (vph)	120	865	36	405	1205	194	125	275	209	31	106	344
RTOR Reduction (vph)	0	2	0	0	0	43	0	23	0	0	0	178
Lane Group Flow (vph)	120	899	0	405	1205	152	125	462	0	0	137	166
Heavy Vehicles (%)	0%	0%	0%	1%	3%	0%	3%	0%	1%	0%	0%	0%
Turn Type	Prot	NA		Prot	NA	Perm	Perm	NA		Perm	NA	pm+ov
Protected Phases	5	2		1	6			4			8	1
Permitted Phases						6	4			8		8
Actuated Green, G (s)	7.0	48.0		26.0	67.0	67.0	28.0	28.0			28.0	54.0
Effective Green, g (s)	9.0	50.0		28.0	69.0	69.0	30.0	30.0			30.0	58.0
Actuated g/C Ratio	0.08	0.42		0.23	0.58	0.58	0.25	0.25			0.25	0.48
Clearance Time (s)	6.0	6.0		6.0	6.0	6.0	6.0	6.0			6.0	6.0
Vehicle Extension (s)	3.0	3.0		3.0	3.0	3.0	3.0	3.0			3.0	3.0
Lane Grp Cap (vph)	126	1495		389	2015	928	264	427			127	806
v/s Ratio Prot	0.07	0.25		c0.24	c0.34			c0.27				0.05
v/s Ratio Perm						0.09	0.12				0.27	0.06
v/c Ratio	0.95	0.60		1.04	0.60	0.16	0.47	1.08			1.08	0.21
Uniform Delay, d1	55.3	27.2		46.0	16.5	12.0	38.3	45.0			45.0	17.8
Progression Factor	1.00	1.00		1.05	0.92	0.58	1.00	1.00			1.00	1.00
Incremental Delay, d2	65.1	1.8		47.7	0.9	0.2	1.3	67.0			102.5	0.1
Delay (s)	120.4	29.0		96.1	16.0	7.2	39.6	112.0			147.5	17.9
Level of Service	F	C		F	B	A	D	F			F	B
Approach Delay (s)		39.8			33.1			97.1			54.8	
Approach LOS		D			C			F			D	

Intersection Summary			
HCM 2000 Control Delay	47.4	HCM 2000 Level of Service	D
HCM 2000 Volume to Capacity ratio	0.87		
Actuated Cycle Length (s)	120.0	Sum of lost time (s)	14.0
Intersection Capacity Utilization	83.2%	ICU Level of Service	E
Analysis Period (min)	15		

c Critical Lane Group

Lane Group	NBL	NBT	NBR	SBL	SBT	SBR	SEL	SET	SER	NWL	NWT	NWR
Lane Configurations												
Traffic Volume (vph)	159	869	38	295	1090	169	162	172	155	41	113	284
Future Volume (vph)	159	869	38	295	1090	169	162	172	155	41	113	284
Lane Util. Factor	1.00	0.95	0.95	1.00	0.95	1.00	1.00	1.00	1.00	1.00	1.00	1.00
Frt		0.994				0.850		0.929				0.850
Flt Protected	0.950			0.950			0.950				0.987	
Satd. Flow (prot)	1685	3554	0	1668	3610	1615	1745	1706	0	0	1813	1561
Flt Permitted	0.950			0.950			0.534				0.354	
Satd. Flow (perm)	1685	3554	0	1668	3610	1615	981	1706	0	0	650	1561
Satd. Flow (RTOR)		4				100		36				305
Adj. Flow (vph)	177	966	42	314	1160	180	200	212	191	44	122	305
Lane Group Flow (vph)	177	1008	0	314	1160	180	200	403	0	0	166	305
Turn Type	Prot	NA		Prot	NA	Perm	Perm	NA		Perm	NA	pm+ov
Protected Phases	5	2		1	6			4			8	1
Permitted Phases						6	4			8		8
Detector Phase	5	2		1	6	6	4	4		8	8	1
Switch Phase												
Minimum Initial (s)	6.0	10.0		6.0	10.0	10.0	8.0	8.0		8.0	8.0	6.0
Minimum Split (s)	12.0	24.0		12.0	24.0	24.0	24.0	24.0		24.0	24.0	12.0
Total Split (s)	16.0	39.0		26.0	49.0	49.0	33.0	33.0		33.0	33.0	26.0
Total Split (%)	13.3%	32.5%		21.7%	40.8%	40.8%	27.5%	27.5%		27.5%	27.5%	21.7%
Maximum Green (s)	10.0	33.0		20.0	43.0	43.0	27.0	27.0		27.0	27.0	20.0
Yellow Time (s)	4.0	4.0		4.0	4.0	4.0	4.0	4.0		4.0	4.0	4.0
All-Red Time (s)	2.0	2.0		2.0	2.0	2.0	2.0	2.0		2.0	2.0	2.0
Lost Time Adjust (s)	-2.0	-2.0		-2.0	-2.0	-2.0	-2.0	-2.0			-2.0	-2.0
Total Lost Time (s)	4.0	4.0		4.0	4.0	4.0	4.0	4.0			4.0	4.0
Lead/Lag	Lag	Lag		Lead	Lead	Lead						Lead
Lead-Lag Optimize?	Yes	Yes		Yes	Yes	Yes						Yes
Vehicle Extension (s)	3.0	3.0		3.0	3.0	3.0	3.0	3.0		3.0	3.0	3.0
Recall Mode	None	C-Max		None	C-Max	C-Max	None	None		None	None	None
Walk Time (s)		7.0			7.0	7.0						
Flash Dont Walk (s)		11.0			7.0	7.0						
Pedestrian Calls (#/hr)		0			0	0						
v/c Ratio	1.05	0.76		0.66	0.58	0.19	0.84	0.92			1.06	0.30
Control Delay	136.2	37.5		37.4	13.5	3.4	73.7	67.6			132.5	2.1
Queue Delay	0.0	0.0		12.6	0.7	0.6	0.0	0.0			0.0	0.0
Total Delay	136.2	37.5		50.0	14.2	4.1	73.7	67.6			132.5	2.1
Queue Length 50th (ft)	~150	350		154	186	14	148	282			~141	0
Queue Length 95th (ft)	#295	455		231	212	m28	#236	#386			#283	36
Internal Link Dist (ft)		206			212			323			459	
Turn Bay Length (ft)	100			100		60	340					330
Base Capacity (vph)	168	1331		474	2015	945	237	439			157	1007
Starvation Cap Reductn	0	0		137	462	491	0	0			0	0
Spillback Cap Reductn	0	0		0	0	0	0	0			0	22
Storage Cap Reductn	0	0		0	0	0	0	0			0	0
Reduced v/c Ratio	1.05	0.76		0.93	0.75	0.40	0.84	0.92			1.06	0.31

Intersection Summary
Cycle Length: 120

Lane Group	Ø9
Lane Configurations	
Traffic Volume (vph)	
Future Volume (vph)	
Lane Util. Factor	
Frt	
Flt Protected	
Satd. Flow (prot)	
Flt Permitted	
Satd. Flow (perm)	
Satd. Flow (RTOR)	
Adj. Flow (vph)	
Lane Group Flow (vph)	
Turn Type	
Protected Phases	9
Permitted Phases	
Detector Phase	
Switch Phase	
Minimum Initial (s)	5.0
Minimum Split (s)	22.0
Total Split (s)	22.0
Total Split (%)	18%
Maximum Green (s)	20.0
Yellow Time (s)	2.0
All-Red Time (s)	0.0
Lost Time Adjust (s)	
Total Lost Time (s)	
Lead/Lag	
Lead-Lag Optimize?	
Vehicle Extension (s)	3.0
Recall Mode	None
Walk Time (s)	7.0
Flash Dont Walk (s)	13.0
Pedestrian Calls (#/hr)	0
v/c Ratio	
Control Delay	
Queue Delay	
Total Delay	
Queue Length 50th (ft)	
Queue Length 95th (ft)	
Internal Link Dist (ft)	
Turn Bay Length (ft)	
Base Capacity (vph)	
Starvation Cap Reductn	
Spillback Cap Reductn	
Storage Cap Reductn	
Reduced v/c Ratio	

Intersection Summary

Actuated Cycle Length: 120
Offset: 0 (0%), Referenced to phase 2:NBT and 6:SBT, Start of Green, Master Intersection
Natural Cycle: 105
Control Type: Actuated-Coordinated
~ Volume exceeds capacity, queue is theoretically infinite.
Queue shown is maximum after two cycles.
95th percentile volume exceeds capacity, queue may be longer.
Queue shown is maximum after two cycles.
m Volume for 95th percentile queue is metered by upstream signal.

Splits and Phases: 2: Main Street & Pond Street

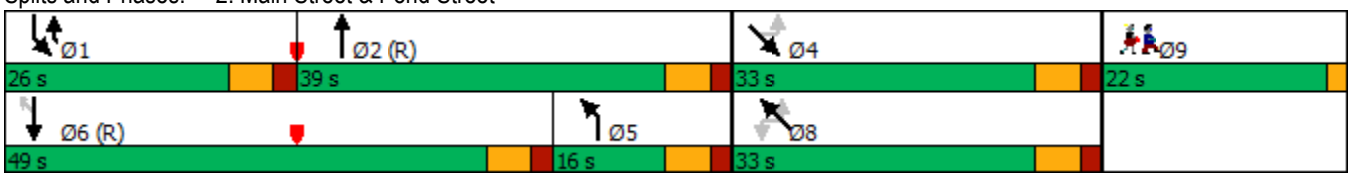

Movement	NBL	NBT	NBR	SBL	SBT	SBR	SEL	SET	SER	NWL	NWT	NWR
Lane Configurations												
Traffic Volume (vph)	159	869	38	295	1090	169	162	172	155	41	113	284
Future Volume (vph)	159	869	38	295	1090	169	162	172	155	41	113	284
Ideal Flow (vphpl)	1900	1900	1900	1900	1900	1900	1900	1900	1900	1900	1900	1900
Lane Width	10	12	12	10	12	12	11	11	12	12	11	11
Total Lost time (s)	4.0	4.0		4.0	4.0	4.0	4.0	4.0			4.0	4.0
Lane Util. Factor	1.00	0.95		1.00	0.95	1.00	1.00	1.00			1.00	1.00
Frt	1.00	0.99		1.00	1.00	0.85	1.00	0.93			1.00	0.85
Flt Protected	0.95	1.00		0.95	1.00	1.00	0.95	1.00			0.99	1.00
Satd. Flow (prot)	1685	3553		1668	3610	1615	1745	1706			1813	1561
Flt Permitted	0.95	1.00		0.95	1.00	1.00	0.53	1.00			0.35	1.00
Satd. Flow (perm)	1685	3553		1668	3610	1615	981	1706			651	1561
Peak-hour factor, PHF	0.90	0.90	0.90	0.94	0.94	0.94	0.81	0.81	0.81	0.93	0.93	0.93
Adj. Flow (vph)	177	966	42	314	1160	180	200	212	191	44	122	305
RTOR Reduction (vph)	0	3	0	0	0	44	0	27	0	0	0	145
Lane Group Flow (vph)	177	1005	0	314	1160	136	200	376	0	0	166	160
Heavy Vehicles (%)	0%	1%	0%	1%	0%	0%	0%	0%	0%	0%	0%	0%
Turn Type	Prot	NA		Prot	NA	Perm	Perm	NA		Perm	NA	pm+ov
Protected Phases	5	2		1	6			4			8	1
Permitted Phases						6	4			8		8
Actuated Green, G (s)	10.0	42.9		32.1	65.0	65.0	27.0	27.0			27.0	59.1
Effective Green, g (s)	12.0	44.9		34.1	67.0	67.0	29.0	29.0			29.0	63.1
Actuated g/C Ratio	0.10	0.37		0.28	0.56	0.56	0.24	0.24			0.24	0.53
Clearance Time (s)	6.0	6.0		6.0	6.0	6.0	6.0	6.0			6.0	6.0
Vehicle Extension (s)	3.0	3.0		3.0	3.0	3.0	3.0	3.0			3.0	3.0
Lane Grp Cap (vph)	168	1329		473	2015	901	237	412			157	872
v/s Ratio Prot	c0.11	c0.28		c0.19	0.32			0.22				0.05
v/s Ratio Perm						0.08	0.20				c0.26	0.05
v/c Ratio	1.05	0.76		0.66	0.58	0.15	0.84	0.91			1.06	0.18
Uniform Delay, d1	54.0	32.8		37.9	17.2	12.8	43.3	44.3			45.5	14.9
Progression Factor	1.00	1.00		0.82	0.72	0.52	1.00	1.00			1.00	1.00
Incremental Delay, d2	84.3	4.1		2.9	1.0	0.3	23.0	24.1			87.9	0.1
Delay (s)	138.3	36.8		34.2	13.3	7.0	66.4	68.3			133.4	15.0
Level of Service	F	D		C	B	A	E	E			F	B
Approach Delay (s)		52.0			16.6			67.7			56.7	
Approach LOS		D			B			E			E	

Intersection Summary			
HCM 2000 Control Delay	40.0	HCM 2000 Level of Service	D
HCM 2000 Volume to Capacity ratio	0.84		
Actuated Cycle Length (s)	120.0	Sum of lost time (s)	14.0
Intersection Capacity Utilization	81.6%	ICU Level of Service	D
Analysis Period (min)	15		

c Critical Lane Group

Main Street at Jessica Lane

Intersection	
Int Delay, s/veh	0.2

Movement	EBL	EBR	NBL	NBT	SBT	SBR
Lane Configurations						
Traffic Vol, veh/h	10	1	0	917	602	1
Future Vol, veh/h	10	1	0	917	602	1
Conflicting Peds, #/hr	0	0	0	0	0	0
Sign Control	Stop	Stop	Free	Free	Free	Free
RT Channelized	-	None	-	None	-	None
Storage Length	0	-	-	-	-	-
Veh in Median Storage, #	0	-	-	0	0	-
Grade, %	0	-	-	0	0	-
Peak Hour Factor	69	69	85	85	93	93
Heavy Vehicles, %	0	0	0	3	2	0
Mvmt Flow	14	1	0	1079	647	1

Major/Minor	Minor2		Major1		Major2	
Conflicting Flow All	1188	324	648	0	-	0
Stage 1	648	-	-	-	-	-
Stage 2	540	-	-	-	-	-
Critical Hdwy	6.8	6.9	4.1	-	-	-
Critical Hdwy Stg 1	5.8	-	-	-	-	-
Critical Hdwy Stg 2	5.8	-	-	-	-	-
Follow-up Hdwy	3.5	3.3	2.2	-	-	-
Pot Cap-1 Maneuver	184	678	947	-	-	-
Stage 1	488	-	-	-	-	-
Stage 2	554	-	-	-	-	-
Platoon blocked, %				-	-	-
Mov Cap-1 Maneuver	184	678	947	-	-	-
Mov Cap-2 Maneuver	184	-	-	-	-	-
Stage 1	488	-	-	-	-	-
Stage 2	554	-	-	-	-	-

Approach	EB	NB	SB
HCM Control Delay, s	24.9	0	0
HCM LOS	C		

Minor Lane/Major Mvmt	NBL	NBT	EBLn1	SBT	SBR
Capacity (veh/h)	947	-	197	-	-
HCM Lane V/C Ratio	-	-	0.081	-	-
HCM Control Delay (s)	0	-	24.9	-	-
HCM Lane LOS	A	-	C	-	-
HCM 95th %tile Q(veh)	0	-	0.3	-	-

Intersection	
Int Delay, s/veh	0.2

Movement	EBL	EBR	NBL	NBT	SBT	SBR
Lane Configurations						
Traffic Vol, veh/h	2	2	3	723	1034	8
Future Vol, veh/h	2	2	3	723	1034	8
Conflicting Peds, #/hr	0	0	0	0	0	0
Sign Control	Stop	Stop	Free	Free	Free	Free
RT Channelized	-	None	-	None	-	None
Storage Length	0	-	-	-	-	-
Veh in Median Storage, #	0	-	-	0	0	-
Grade, %	0	-	-	0	0	-
Peak Hour Factor	33	33	91	91	87	87
Heavy Vehicles, %	0	0	0	0	1	0
Mvmt Flow	6	6	3	795	1189	9

Major/Minor	Minor2		Major1		Major2	
Conflicting Flow All	1598	599	1198	0	-	0
Stage 1	1194	-	-	-	-	-
Stage 2	404	-	-	-	-	-
Critical Hdwy	6.8	6.9	4.1	-	-	-
Critical Hdwy Stg 1	5.8	-	-	-	-	-
Critical Hdwy Stg 2	5.8	-	-	-	-	-
Follow-up Hdwy	3.5	3.3	2.2	-	-	-
Pot Cap-1 Maneuver	99	450	590	-	-	-
Stage 1	254	-	-	-	-	-
Stage 2	649	-	-	-	-	-
Platoon blocked, %				-	-	-
Mov Cap-1 Maneuver	98	450	590	-	-	-
Mov Cap-2 Maneuver	98	-	-	-	-	-
Stage 1	252	-	-	-	-	-
Stage 2	649	-	-	-	-	-

Approach	EB	NB	SB
HCM Control Delay, s	29.2	0	0
HCM LOS	D		

Minor Lane/Major Mvmt	NBL	NBT	EBLn1	SBT	SBR
Capacity (veh/h)	590	-	161	-	-
HCM Lane V/C Ratio	0.006	-	0.075	-	-
HCM Control Delay (s)	11.1	0	29.2	-	-
HCM Lane LOS	B	A	D	-	-
HCM 95th %tile Q(veh)	0	-	0.2	-	-

Intersection	
Int Delay, s/veh	0.1

Movement	EBL	EBR	NBL	NBT	SBT	SBR
Lane Configurations						
Traffic Vol, veh/h	2	1	1	879	914	2
Future Vol, veh/h	2	1	1	879	914	2
Conflicting Peds, #/hr	0	0	0	0	0	0
Sign Control	Stop	Stop	Free	Free	Free	Free
RT Channelized	-	None	-	None	-	None
Storage Length	0	-	-	-	-	-
Veh in Median Storage, #	0	-	-	0	0	-
Grade, %	0	-	-	0	0	-
Peak Hour Factor	75	75	95	95	94	94
Heavy Vehicles, %	0	0	0	1	1	0
Mvmt Flow	3	1	1	925	972	2

Major/Minor	Minor2		Major1		Major2	
Conflicting Flow All	1438	487	974	0	-	0
Stage 1	973	-	-	-	-	-
Stage 2	465	-	-	-	-	-
Critical Hdwy	6.8	6.9	4.1	-	-	-
Critical Hdwy Stg 1	5.8	-	-	-	-	-
Critical Hdwy Stg 2	5.8	-	-	-	-	-
Follow-up Hdwy	3.5	3.3	2.2	-	-	-
Pot Cap-1 Maneuver	126	532	716	-	-	-
Stage 1	332	-	-	-	-	-
Stage 2	604	-	-	-	-	-
Platoon blocked, %				-	-	-
Mov Cap-1 Maneuver	126	532	716	-	-	-
Mov Cap-2 Maneuver	126	-	-	-	-	-
Stage 1	331	-	-	-	-	-
Stage 2	604	-	-	-	-	-

Approach	EB	NB	SB
HCM Control Delay, s	26.8	0	0
HCM LOS	D		

Minor Lane/Major Mvmt	NBL	NBT	EBLn1	SBT	SBR
Capacity (veh/h)	716	-	169	-	-
HCM Lane V/C Ratio	0.001	-	0.024	-	-
HCM Control Delay (s)	10	0	26.8	-	-
HCM Lane LOS	B	A	D	-	-
HCM 95th %tile Q(veh)	0	-	0.1	-	-

Intersection	
Int Delay, s/veh	0.3

Movement	EBL	EBR	NBL	NBT	SBT	SBR
Lane Configurations						
Traffic Vol, veh/h	11	1	0	1146	840	1
Future Vol, veh/h	11	1	0	1146	840	1
Conflicting Peds, #/hr	0	0	0	0	0	0
Sign Control	Stop	Stop	Free	Free	Free	Free
RT Channelized	-	None	-	None	-	None
Storage Length	0	-	-	-	-	-
Veh in Median Storage, #	0	-	-	0	0	-
Grade, %	0	-	-	0	0	-
Peak Hour Factor	69	69	85	85	93	93
Heavy Vehicles, %	0	0	0	3	2	0
Mvmt Flow	16	1	0	1348	903	1

Major/Minor	Minor2		Major1		Major2	
Conflicting Flow All	1578	452	904	0	-	0
Stage 1	904	-	-	-	-	-
Stage 2	674	-	-	-	-	-
Critical Hdwy	6.8	6.9	4.1	-	-	-
Critical Hdwy Stg 1	5.8	-	-	-	-	-
Critical Hdwy Stg 2	5.8	-	-	-	-	-
Follow-up Hdwy	3.5	3.3	2.2	-	-	-
Pot Cap-1 Maneuver	102	560	761	-	-	-
Stage 1	360	-	-	-	-	-
Stage 2	473	-	-	-	-	-
Platoon blocked, %				-	-	-
Mov Cap-1 Maneuver	102	560	761	-	-	-
Mov Cap-2 Maneuver	102	-	-	-	-	-
Stage 1	360	-	-	-	-	-
Stage 2	473	-	-	-	-	-

Approach	EB	NB	SB
HCM Control Delay, s	44.2	0	0
HCM LOS	E		

Minor Lane/Major Mvmt	NBL	NBT	EBLn1	SBT	SBR
Capacity (veh/h)	761	-	109	-	-
HCM Lane V/C Ratio	-	-	0.16	-	-
HCM Control Delay (s)	0	-	44.2	-	-
HCM Lane LOS	A	-	E	-	-
HCM 95th %tile Q(veh)	0	-	0.5	-	-

Intersection	
Int Delay, s/veh	0.3

Movement	EBL	EBR	NBL	NBT	SBT	SBR
Lane Configurations						
Traffic Vol, veh/h	2	2	3	918	1348	9
Future Vol, veh/h	2	2	3	918	1348	9
Conflicting Peds, #/hr	0	0	0	0	0	0
Sign Control	Stop	Stop	Free	Free	Free	Free
RT Channelized	-	None	-	None	-	None
Storage Length	0	-	-	-	-	-
Veh in Median Storage, #	0	-	-	0	0	-
Grade, %	0	-	-	0	0	-
Peak Hour Factor	33	33	91	91	87	87
Heavy Vehicles, %	0	0	0	0	1	0
Mvmt Flow	6	6	3	1009	1549	10

Major/Minor	Minor2		Major1		Major2	
Conflicting Flow All	2065	780	1559	0	-	0
Stage 1	1554	-	-	-	-	-
Stage 2	511	-	-	-	-	-
Critical Hdwy	6.8	6.9	4.1	-	-	-
Critical Hdwy Stg 1	5.8	-	-	-	-	-
Critical Hdwy Stg 2	5.8	-	-	-	-	-
Follow-up Hdwy	3.5	3.3	2.2	-	-	-
Pot Cap-1 Maneuver	48	342	430	-	-	-
Stage 1	163	-	-	-	-	-
Stage 2	573	-	-	-	-	-
Platoon blocked, %				-	-	-
Mov Cap-1 Maneuver	47	342	430	-	-	-
Mov Cap-2 Maneuver	47	-	-	-	-	-
Stage 1	160	-	-	-	-	-
Stage 2	573	-	-	-	-	-

Approach	EB	NB	SB
HCM Control Delay, s	55.7	0.1	0
HCM LOS	F		

Minor Lane/Major Mvmt	NBL	NBT	EBLn1	SBT	SBR
Capacity (veh/h)	430	-	83	-	-
HCM Lane V/C Ratio	0.008	-	0.146	-	-
HCM Control Delay (s)	13.4	0.1	55.7	-	-
HCM Lane LOS	B	A	F	-	-
HCM 95th %tile Q(veh)	0	-	0.5	-	-

Intersection	
Int Delay, s/veh	0.1

Movement	EBL	EBR	NBL	NBT	SBT	SBR
Lane Configurations						
Traffic Vol, veh/h	2	1	1	1088	1222	2
Future Vol, veh/h	2	1	1	1088	1222	2
Conflicting Peds, #/hr	0	0	0	0	0	0
Sign Control	Stop	Stop	Free	Free	Free	Free
RT Channelized	-	None	-	None	-	None
Storage Length	0	-	-	-	-	-
Veh in Median Storage, #	0	-	-	0	0	-
Grade, %	0	-	-	0	0	-
Peak Hour Factor	75	75	95	95	94	94
Heavy Vehicles, %	0	0	0	1	1	0
Mvmt Flow	3	1	1	1145	1300	2

Major/Minor	Minor2		Major1		Major2	
Conflicting Flow All	1876	651	1302	0	-	0
Stage 1	1301	-	-	-	-	-
Stage 2	575	-	-	-	-	-
Critical Hdwy	6.8	6.9	4.1	-	-	-
Critical Hdwy Stg 1	5.8	-	-	-	-	-
Critical Hdwy Stg 2	5.8	-	-	-	-	-
Follow-up Hdwy	3.5	3.3	2.2	-	-	-
Pot Cap-1 Maneuver	65	416	539	-	-	-
Stage 1	223	-	-	-	-	-
Stage 2	532	-	-	-	-	-
Platoon blocked, %				-	-	-
Mov Cap-1 Maneuver	65	416	539	-	-	-
Mov Cap-2 Maneuver	65	-	-	-	-	-
Stage 1	222	-	-	-	-	-
Stage 2	532	-	-	-	-	-

Approach	EB	NB	SB
HCM Control Delay, s	46.9	0	0
HCM LOS	E		

Minor Lane/Major Mvmt	NBL	NBT	EBLn1	SBT	SBR
Capacity (veh/h)	539	-	90	-	-
HCM Lane V/C Ratio	0.002	-	0.044	-	-
HCM Control Delay (s)	11.7	0	46.9	-	-
HCM Lane LOS	B	A	E	-	-
HCM 95th %tile Q(veh)	0	-	0.1	-	-

Intersection	
Int Delay, s/veh	0.3

Movement	EBL	EBR	NBL	NBT	SBT	SBR
Lane Configurations						
Traffic Vol, veh/h	11	1	0	1167	858	1
Future Vol, veh/h	11	1	0	1167	858	1
Conflicting Peds, #/hr	0	0	0	0	0	0
Sign Control	Stop	Stop	Free	Free	Free	Free
RT Channelized	-	None	-	None	-	None
Storage Length	0	-	-	-	-	-
Veh in Median Storage, #	0	-	-	0	0	-
Grade, %	0	-	-	0	0	-
Peak Hour Factor	92	92	85	85	93	93
Heavy Vehicles, %	2	2	0	3	2	0
Mvmt Flow	12	1	0	1373	923	1

Major/Minor	Minor2		Major1		Major2	
Conflicting Flow All	1611	462	924	0	-	0
Stage 1	924	-	-	-	-	-
Stage 2	687	-	-	-	-	-
Critical Hdwy	6.84	6.94	4.1	-	-	-
Critical Hdwy Stg 1	5.84	-	-	-	-	-
Critical Hdwy Stg 2	5.84	-	-	-	-	-
Follow-up Hdwy	3.52	3.32	2.2	-	-	-
Pot Cap-1 Maneuver	95	547	748	-	-	-
Stage 1	347	-	-	-	-	-
Stage 2	461	-	-	-	-	-
Platoon blocked, %				-	-	-
Mov Cap-1 Maneuver	95	547	748	-	-	-
Mov Cap-2 Maneuver	95	-	-	-	-	-
Stage 1	347	-	-	-	-	-
Stage 2	461	-	-	-	-	-

Approach	EB	NB	SB
HCM Control Delay, s	45.4	0	0
HCM LOS	E		

Minor Lane/Major Mvmt	NBL	NBT	EBLn1	SBT	SBR
Capacity (veh/h)	748	-	102	-	-
HCM Lane V/C Ratio	-	-	0.128	-	-
HCM Control Delay (s)	0	-	45.4	-	-
HCM Lane LOS	A	-	E	-	-
HCM 95th %tile Q(veh)	0	-	0.4	-	-

Intersection	
Int Delay, s/veh	0.1

Movement	EBL	EBR	NBL	NBT	SBT	SBR
Lane Configurations						
Traffic Vol, veh/h	2	2	3	932	1360	9
Future Vol, veh/h	2	2	3	932	1360	9
Conflicting Peds, #/hr	0	0	0	0	0	0
Sign Control	Stop	Stop	Free	Free	Free	Free
RT Channelized	-	None	-	None	-	None
Storage Length	0	-	-	-	-	-
Veh in Median Storage, #	0	-	-	0	0	-
Grade, %	0	-	-	0	0	-
Peak Hour Factor	92	92	91	91	87	87
Heavy Vehicles, %	2	2	0	0	1	0
Mvmt Flow	2	2	3	1024	1563	10

Major/Minor	Minor2		Major1		Major2	
Conflicting Flow All	2086	787	1573	0	-	0
Stage 1	1568	-	-	-	-	-
Stage 2	518	-	-	-	-	-
Critical Hdwy	6.84	6.94	4.1	-	-	-
Critical Hdwy Stg 1	5.84	-	-	-	-	-
Critical Hdwy Stg 2	5.84	-	-	-	-	-
Follow-up Hdwy	3.52	3.32	2.2	-	-	-
Pot Cap-1 Maneuver	46	334	425	-	-	-
Stage 1	157	-	-	-	-	-
Stage 2	563	-	-	-	-	-
Platoon blocked, %				-	-	-
Mov Cap-1 Maneuver	45	334	425	-	-	-
Mov Cap-2 Maneuver	45	-	-	-	-	-
Stage 1	154	-	-	-	-	-
Stage 2	563	-	-	-	-	-

Approach	EB	NB	SB
HCM Control Delay, s	53.2	0.1	0
HCM LOS	F		

Minor Lane/Major Mvmt	NBL	NBT	EBLn1	SBT	SBR
Capacity (veh/h)	425	-	79	-	-
HCM Lane V/C Ratio	0.008	-	0.055	-	-
HCM Control Delay (s)	13.5	0.1	53.2	-	-
HCM Lane LOS	B	A	F	-	-
HCM 95th %tile Q(veh)	0	-	0.2	-	-

Intersection	
Int Delay, s/veh	0.1

Movement	EBL	EBR	NBL	NBT	SBT	SBR
Lane Configurations						
Traffic Vol, veh/h	2	1	1	1120	1250	2
Future Vol, veh/h	2	1	1	1120	1250	2
Conflicting Peds, #/hr	0	0	0	0	0	0
Sign Control	Stop	Stop	Free	Free	Free	Free
RT Channelized	-	None	-	None	-	None
Storage Length	0	-	-	-	-	-
Veh in Median Storage, #	0	-	-	0	0	-
Grade, %	0	-	-	0	0	-
Peak Hour Factor	92	92	95	95	94	94
Heavy Vehicles, %	2	2	0	1	1	0
Mvmt Flow	2	1	1	1179	1330	2

Major/Minor	Minor2		Major1		Major2	
Conflicting Flow All	1923	666	1332	0	-	0
Stage 1	1331	-	-	-	-	-
Stage 2	592	-	-	-	-	-
Critical Hdwy	6.84	6.94	4.1	-	-	-
Critical Hdwy Stg 1	5.84	-	-	-	-	-
Critical Hdwy Stg 2	5.84	-	-	-	-	-
Follow-up Hdwy	3.52	3.32	2.2	-	-	-
Pot Cap-1 Maneuver	59	402	525	-	-	-
Stage 1	211	-	-	-	-	-
Stage 2	516	-	-	-	-	-
Platoon blocked, %				-	-	-
Mov Cap-1 Maneuver	59	402	525	-	-	-
Mov Cap-2 Maneuver	59	-	-	-	-	-
Stage 1	210	-	-	-	-	-
Stage 2	516	-	-	-	-	-

Approach	EB	NB	SB
HCM Control Delay, s	50.7	0	0
HCM LOS	F		

Minor Lane/Major Mvmt	NBL	NBT	EBLn1	SBT	SBR
Capacity (veh/h)	525	-	82	-	-
HCM Lane V/C Ratio	0.002	-	0.04	-	-
HCM Control Delay (s)	11.9	0	50.7	-	-
HCM Lane LOS	B	A	F	-	-
HCM 95th %tile Q(veh)	0	-	0.1	-	-

Pond Street at the Project Site Driveway

Intersection	
Int Delay, s/veh	0.8

Movement	SET	SER	NWL	NWT	NEL	NER
Lane Configurations						
Traffic Vol, veh/h	373	14	0	524	8	56
Future Vol, veh/h	373	14	0	524	8	56
Conflicting Peds, #/hr	0	0	0	0	0	0
Sign Control	Free	Free	Free	Free	Stop	Stop
RT Channelized	-	None	-	None	-	None
Storage Length	-	-	-	-	0	-
Veh in Median Storage, #	0	-	-	0	0	-
Grade, %	0	-	-	0	0	-
Peak Hour Factor	90	92	92	93	92	92
Heavy Vehicles, %	1	2	2	0	2	2
Mvmt Flow	414	15	0	563	9	61

Major/Minor	Major1		Major2		Minor1	
Conflicting Flow All	0	0	429	0	985	422
Stage 1	-	-	-	-	422	-
Stage 2	-	-	-	-	563	-
Critical Hdwy	-	-	4.12	-	6.42	6.22
Critical Hdwy Stg 1	-	-	-	-	5.42	-
Critical Hdwy Stg 2	-	-	-	-	5.42	-
Follow-up Hdwy	-	-	2.218	-	3.518	3.318
Pot Cap-1 Maneuver	-	-	1130	-	275	632
Stage 1	-	-	-	-	662	-
Stage 2	-	-	-	-	570	-
Platoon blocked, %	-	-		-		
Mov Cap-1 Maneuver	-	-	1130	-	275	632
Mov Cap-2 Maneuver	-	-	-	-	275	-
Stage 1	-	-	-	-	662	-
Stage 2	-	-	-	-	570	-

Approach	SE	NW	NE
HCM Control Delay, s	0	0	12.6
HCM LOS			B

Minor Lane/Major Mvmt	NELn1	NWL	NWT	SET	SER
Capacity (veh/h)	544	1130	-	-	-
HCM Lane V/C Ratio	0.128	-	-	-	-
HCM Control Delay (s)	12.6	0	-	-	-
HCM Lane LOS	B	A	-	-	-
HCM 95th %tile Q(veh)	0.4	0	-	-	-

Intersection	
Int Delay, s/veh	0.6

Movement	SET	SER	NWL	NWT	NEL	NER
Lane Configurations						
Traffic Vol, veh/h	540	11	0	387	6	39
Future Vol, veh/h	540	11	0	387	6	39
Conflicting Peds, #/hr	0	0	0	0	0	0
Sign Control	Free	Free	Free	Free	Stop	Stop
RT Channelized	-	None	-	None	-	None
Storage Length	-	-	-	-	0	-
Veh in Median Storage, #	0	-	-	0	0	-
Grade, %	0	-	-	0	0	-
Peak Hour Factor	95	92	92	92	92	92
Heavy Vehicles, %	1	2	2	0	2	2
Mvmt Flow	568	12	0	421	7	42

Major/Minor	Major1		Major2		Minor1	
Conflicting Flow All	0	0	580	0	995	574
Stage 1	-	-	-	-	574	-
Stage 2	-	-	-	-	421	-
Critical Hdwy	-	-	4.12	-	6.42	6.22
Critical Hdwy Stg 1	-	-	-	-	5.42	-
Critical Hdwy Stg 2	-	-	-	-	5.42	-
Follow-up Hdwy	-	-	2.218	-	3.518	3.318
Pot Cap-1 Maneuver	-	-	994	-	271	518
Stage 1	-	-	-	-	563	-
Stage 2	-	-	-	-	662	-
Platoon blocked, %	-	-		-		
Mov Cap-1 Maneuver	-	-	994	-	271	518
Mov Cap-2 Maneuver	-	-	-	-	271	-
Stage 1	-	-	-	-	563	-
Stage 2	-	-	-	-	662	-

Approach	SE	NW	NE
HCM Control Delay, s	0	0	13.7
HCM LOS			B

Minor Lane/Major Mvmt	NELn1	NWL	NWT	SET	SER
Capacity (veh/h)	462	994	-	-	-
HCM Lane V/C Ratio	0.106	-	-	-	-
HCM Control Delay (s)	13.7	0	-	-	-
HCM Lane LOS	B	A	-	-	-
HCM 95th %tile Q(veh)	0.4	0	-	-	-

Intersection	
Int Delay, s/veh	1.4

Movement	SET	SER	NWL	NWT	NEL	NER
Lane Configurations						
Traffic Vol, veh/h	403	23	0	441	13	86
Future Vol, veh/h	403	23	0	441	13	86
Conflicting Peds, #/hr	0	0	0	0	0	0
Sign Control	Free	Free	Free	Free	Stop	Stop
RT Channelized	-	None	-	None	-	None
Storage Length	-	-	-	-	0	-
Veh in Median Storage, #	0	-	-	0	0	-
Grade, %	0	-	-	0	0	-
Peak Hour Factor	81	92	92	92	92	92
Heavy Vehicles, %	0	2	2	0	2	2
Mvmt Flow	498	25	0	479	14	93

Major/Minor	Major1		Major2		Minor1	
Conflicting Flow All	0	0	523	0	990	511
Stage 1	-	-	-	-	511	-
Stage 2	-	-	-	-	479	-
Critical Hdwy	-	-	4.12	-	6.42	6.22
Critical Hdwy Stg 1	-	-	-	-	5.42	-
Critical Hdwy Stg 2	-	-	-	-	5.42	-
Follow-up Hdwy	-	-	2.218	-	3.518	3.318
Pot Cap-1 Maneuver	-	-	1043	-	273	563
Stage 1	-	-	-	-	602	-
Stage 2	-	-	-	-	623	-
Platoon blocked, %	-	-		-		
Mov Cap-1 Maneuver	-	-	1043	-	273	563
Mov Cap-2 Maneuver	-	-	-	-	273	-
Stage 1	-	-	-	-	602	-
Stage 2	-	-	-	-	623	-

Approach	SE	NW	NE
HCM Control Delay, s	0	0	14.3
HCM LOS			B

Minor Lane/Major Mvmt	NELn1	NWL	NWT	SET	SER
Capacity (veh/h)	494	1043	-	-	-
HCM Lane V/C Ratio	0.218	-	-	-	-
HCM Control Delay (s)	14.3	0	-	-	-
HCM Lane LOS	B	A	-	-	-
HCM 95th %tile Q(veh)	0.8	0	-	-	-

Main Street at the Project Site Driveway

Intersection	
Int Delay, s/veh	1.1

Movement	EBL	EBR	NBL	NBT	SBT	SBR
Lane Configurations						
Traffic Vol, veh/h	0	48	36	1142	811	71
Future Vol, veh/h	0	48	36	1142	811	71
Conflicting Peds, #/hr	0	0	0	0	0	0
Sign Control	Stop	Stop	Free	Free	Free	Free
RT Channelized	-	None	-	None	-	None
Storage Length	0	-	-	-	-	-
Veh in Median Storage, #	0	-	-	0	0	-
Grade, %	0	-	-	0	0	-
Peak Hour Factor	92	92	92	85	89	92
Heavy Vehicles, %	2	2	2	3	2	2
Mvmt Flow	0	52	39	1344	911	77

Major/Minor	Minor2		Major1		Major2	
Conflicting Flow All	1700	494	988	0	-	0
Stage 1	950	-	-	-	-	-
Stage 2	750	-	-	-	-	-
Critical Hdwy	6.84	6.94	4.14	-	-	-
Critical Hdwy Stg 1	5.84	-	-	-	-	-
Critical Hdwy Stg 2	5.84	-	-	-	-	-
Follow-up Hdwy	3.52	3.32	2.22	-	-	-
Pot Cap-1 Maneuver	83	521	695	-	-	-
Stage 1	336	-	-	-	-	-
Stage 2	427	-	-	-	-	-
Platoon blocked, %				-	-	-
Mov Cap-1 Maneuver	65	521	695	-	-	-
Mov Cap-2 Maneuver	65	-	-	-	-	-
Stage 1	262	-	-	-	-	-
Stage 2	427	-	-	-	-	-

Approach	EB	NB	SB
HCM Control Delay, s	12.7	1.4	0
HCM LOS	B		

Minor Lane/Major Mvmt	NBL	NBT	EBLn1	SBT	SBR
Capacity (veh/h)	695	-	521	-	-
HCM Lane V/C Ratio	0.056	-	0.1	-	-
HCM Control Delay (s)	10.5	1.1	12.7	-	-
HCM Lane LOS	B	A	B	-	-
HCM 95th %tile Q(veh)	0.2	-	0.3	-	-

Intersection	
Int Delay, s/veh	0.7

Movement	EBL	EBR	NBL	NBT	SBT	SBR
Lane Configurations						
Traffic Vol, veh/h	0	34	25	909	1335	49
Future Vol, veh/h	0	34	25	909	1335	49
Conflicting Peds, #/hr	0	0	0	0	0	0
Sign Control	Stop	Stop	Free	Free	Free	Free
RT Channelized	-	None	-	None	-	None
Storage Length	0	-	-	-	-	-
Veh in Median Storage, #	0	-	-	0	0	-
Grade, %	0	-	-	0	0	-
Peak Hour Factor	92	92	92	91	95	92
Heavy Vehicles, %	2	2	2	0	2	2
Mvmt Flow	0	37	27	999	1405	53

Major/Minor	Minor2		Major1		Major2	
Conflicting Flow All	1986	729	1458	0	-	0
Stage 1	1432	-	-	-	-	-
Stage 2	554	-	-	-	-	-
Critical Hdwy	6.84	6.94	4.14	-	-	-
Critical Hdwy Stg 1	5.84	-	-	-	-	-
Critical Hdwy Stg 2	5.84	-	-	-	-	-
Follow-up Hdwy	3.52	3.32	2.22	-	-	-
Pot Cap-1 Maneuver	53	365	460	-	-	-
Stage 1	186	-	-	-	-	-
Stage 2	539	-	-	-	-	-
Platoon blocked, %				-	-	-
Mov Cap-1 Maneuver	46	365	460	-	-	-
Mov Cap-2 Maneuver	46	-	-	-	-	-
Stage 1	161	-	-	-	-	-
Stage 2	539	-	-	-	-	-

Approach	EB	NB	SB
HCM Control Delay, s	16	1.1	0
HCM LOS	C		

Minor Lane/Major Mvmt	NBL	NBT	EBLn1	SBT	SBR
Capacity (veh/h)	460	-	365	-	-
HCM Lane V/C Ratio	0.059	-	0.101	-	-
HCM Control Delay (s)	13.3	0.8	16	-	-
HCM Lane LOS	B	A	C	-	-
HCM 95th %tile Q(veh)	0.2	-	0.3	-	-

Intersection	
Int Delay, s/veh	1.7

Movement	EBL	EBR	NBL	NBT	SBT	SBR
Lane Configurations						
Traffic Vol, veh/h	0	74	56	1066	1178	108
Future Vol, veh/h	0	74	56	1066	1178	108
Conflicting Peds, #/hr	0	0	0	0	0	0
Sign Control	Stop	Stop	Free	Free	Free	Free
RT Channelized	-	None	-	None	-	None
Storage Length	0	-	-	-	-	-
Veh in Median Storage, #	0	-	-	0	0	-
Grade, %	0	-	-	0	0	-
Peak Hour Factor	92	92	92	95	88	92
Heavy Vehicles, %	2	2	2	0	1	2
Mvmt Flow	0	80	61	1122	1339	117

Major/Minor	Minor2		Major1		Major2	
Conflicting Flow All	2081	728	1456	0	-	0
Stage 1	1398	-	-	-	-	-
Stage 2	683	-	-	-	-	-
Critical Hdwy	6.84	6.94	4.14	-	-	-
Critical Hdwy Stg 1	5.84	-	-	-	-	-
Critical Hdwy Stg 2	5.84	-	-	-	-	-
Follow-up Hdwy	3.52	3.32	2.22	-	-	-
Pot Cap-1 Maneuver	46	366	461	-	-	-
Stage 1	194	-	-	-	-	-
Stage 2	463	-	-	-	-	-
Platoon blocked, %				-	-	-
Mov Cap-1 Maneuver	30	366	461	-	-	-
Mov Cap-2 Maneuver	30	-	-	-	-	-
Stage 1	126	-	-	-	-	-
Stage 2	463	-	-	-	-	-

Approach	EB	NB	SB
HCM Control Delay, s	17.6	2.8	0
HCM LOS	C		

Minor Lane/Major Mvmt	NBL	NBT	EBLn1	SBT	SBR
Capacity (veh/h)	461	-	366	-	-
HCM Lane V/C Ratio	0.132	-	0.22	-	-
HCM Control Delay (s)	14	2.2	17.6	-	-
HCM Lane LOS	B	A	C	-	-
HCM 95th %tile Q(veh)	0.5	-	0.8	-	-